Transfer

Portable Grain Belt Conveyor Assembly Manual

This manual applies to the following brands and models:

Batco BCX^2, Westfield WCX^2, Hutchinson HCX^2:

1500 Series: 1515

Original Instructions

Read this manual before using product. Failure to follow instructions and safety precautions can result in serious injury, death, or property damage. Keep manual for future reference.

Part Number: P1512157 R0

Revised: November 2018

CONTENTS

1. Safety

1.1. Safety Alert Symbol and Signal Words

This safety alert symbol indicates important safety messages in this manual. When you see this symbol, be alert to the possibility of injury or death, carefully read the message that follows, and inform others.

Signal Words: Note the use of the signal words **DANGER**, **WARNING**, **CAUTION**, and **NOTICE** with the safety messages. The appropriate signal word for each message has been selected using the definitions below as a guideline.

DANGER Indicates an imminently hazardous situation that, if not avoided, will result in serious injury or death.

WARNING Indicates a hazardous situation that, if not avoided, could result in serious injury or death.

CAUTION Indicates a hazardous situation that, if not avoided, may result in minor or moderate injury.

NOTICE Indicates a potentially hazardous situation that, if not avoided, may result in property damage.

1.2. General Product Safety

YOU are responsible for the **SAFE** use and maintenance of your conveyor. **YOU** must ensure that you and anyone else who is going to work around the conveyor understands all procedures and related **SAFETY** information contained in this manual.

Remember, **YOU** are the key to safety. Good safety practices not only protect you, but also the people around you. Make these practices a working part of your safety program. All accidents can be avoided.

- It is the conveyor owner, operator, and maintenance personnel's responsibility to read and understand **ALL** safety instructions, safety decals, and manuals and follow them when operating, or maintaining the equipment.

- Owners must give instructions and review the information initially and annually with all personnel before allowing them to operate the conveyor. Untrained users/operators expose themselves and bystanders to possible serious injury or death.
- The conveyor is not intended to be used by children.
- Use the conveyor for its intended purposes only.
- Do not modify the conveyor in any way without written permission from the manufacturer. Unauthorized modification may impair the function and/or safety, and could affect the life of the conveyor. Any unauthorized modification will void the warranty.

1.3. Moving Conveyor Belt Safety

WARNING

- DO NOT step on or touch moving conveyor belt.
- Shut off and lock out power to adjust, service, or clean.

1.4. Rotating Parts Safety

WARNING

- Keep body, hair, and clothing away from rotating pulleys, belts, chains, and sprockets.
- Do not operate with any guard removed or modified. Keep guards in good working order.
- Shut off and remove key or lock out power source before inspecting or servicing machine.

1.5. Drives and Lockout Safety

Inspect the power source(s) before using and know how to shut down in an emergency. Whenever you service or adjust your equipment, make sure you shut down the power source and unplug or remove the key (as applicable) to prevent inadvertent start-up and hazardous energy release. Know the procedure(s) that applies to your equipment from the following power source(s). Ensure that all personnel are clear before turning on power to equipment.

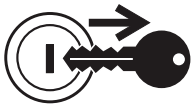

1.5.1 Gas Engine Safety

WARNING **Power Source**

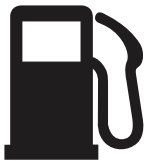

- Keep guards in place and secure.
- Properly ventilate surrounding area.
- Never fill the fuel tank with the engine running, while smoking, or near an open flame. Always shut down and allow engine to cool before filling with fuel.
- Never overfill the tank or spill fuel. If fuel is spilled, clean it up immediately.
- Be sure to use the correct type and grade of fuel. Ground the fuel funnel or nozzle against the filler neck to prevent sparks that could ignite fuel vapors.
- Be sure to replace the fuel fill cap when you are done.

Lockout

- For engines with an electric start, remove the ignition key, the spark plug wire, or the spark plug.
- For engines with a rope or crank start, remove the spark plug wire or the spark plug.

1.5.2 Electric Motor Safety

WARNING **Power Source**

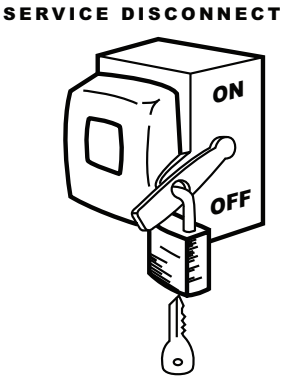

- Electric motors and controls shall be installed and serviced by a qualified electrician and must meet all local codes and standards.
- A magnetic starter should be used to protect your motor.
- You must have a manual reset button.
- Reset and motor starting controls must be located so that the operator has full view of the entire operation.
- Locate main power disconnect switch within reach from ground level to permit ready access in case of an emergency.
- Motor must be properly grounded.
- Guards must be in place and secure.
- Ensure electrical wiring and cords remain in good condition; replace if necessary.
- Use a totally enclosed electric motor if operating in extremely dusty conditions.

Lockout

- The main power disconnect switch should be in the locked position during shutdown or whenever maintenance is performed.
- If reset is required, disconnect all power **before** resetting motor.

1.5.3 Hydraulic Power Safety

WARNING **Power Source**

- Refer to the rules and regulations applicable to the power source operating your hydraulic drive.
- Do not connect or disconnect hydraulic lines while system is under pressure.
- Keep all hydraulic lines away from moving parts and pinch points.
- Escaping hydraulic fluid under pressure will cause serious injury if it penetrates the skin surface (serious infection or toxic reaction can develop). See a doctor immediately if injured.
- Use metal or wood as a backstop when searching for hydraulic leaks and wear proper hand and eye protection.
- Check all hydraulic components are tight and in good condition. Replace any worn, cut, abraded, flattened, or crimped hoses.
- Clean the connections before connecting to equipment.
- Do not attempt any makeshift repairs to the hydraulic fittings or hoses with tape, clamps, or adhesive. The hydraulic system operates under extremely high pressure; such repairs will fail suddenly and create a hazardous and unsafe condition.

Lockout

- Always place all hydraulic controls in neutral and relieve system pressure before disconnecting or working on hydraulic system.

1.6. Tire Safety

WARNING Failure to follow proper procedures when mounting a tire on a wheel or rim can produce an explosion that may result in serious injury or death.

- DO NOT attempt to mount a tire unless you have the proper equipment and experience to do the job.
- Have a qualified tire dealer or repair service perform required tire maintenance.
- When replacing worn tires, make sure they meet the original tire specifications. Never undersize the replacement tire.
- DO NOT weld to the tire rim with the tire mounted on the rim. This action may cause an explosion which could result in serious injury or death.
- Inflate tires to the manufacturer's recommended pressure.
- Tires should not be operated at speeds higher than their rated speed.
- Keep wheel lug nuts tightened to manufacturer's recommendations.
- Never reinflate a tire that has been run flat or seriously under-inflated without removing the tire from the wheel. Have the tire and wheel closely inspected for damage before remounting.

1.7. Personal Protective Equipment

The following Personal Protective Equipment (PPE) should be worn when assembling the equipment.

Safety Glasses

- Wear safety glasses at all times to protect eyes from debris.

Work Gloves

- Wear work gloves to protect your hands from sharp and rough edges.

Steel-Toe Boots

- Wear steel-toe boots to protect feet from falling debris.

Coveralls

- Wear coveralls to protect skin.

Hard Hat

- Wear a hard hat to help protect your head.

1.8. Safety Equipment

The following safety equipment should be kept on site:

Fire Extinguisher

- Provide a fire extinguisher for use in case of an accident. Store in a highly visible and accessible place.

First-Aid Kit

- Have a properly-stocked first-aid kit available for use should the need arise, and know how to use it.

1.9. Safety Decals

- Keep safety decals clean and legible at all times.
- Replace safety decals that are missing or have become illegible. See decal location figures that follow.
- Replaced parts must display the same decal(s) as the original part.
- Replacement safety decals are available **free of charge** from your distributor, dealer, or factory as applicable.

1.9.1 Decal Installation/Replacement

1. Decal area must be clean and dry, with a temperature above 50°F (10°C).
2. Decide on the exact position before you remove the backing paper.
3. Align the decal over the specified area and carefully press the small portion with the exposed sticky backing in place.
4. Slowly peel back the remaining paper and carefully smooth the remaining portion of the decal in place.
5. Small air pockets can be pierced with a pin and smoothed out using the sign backing paper.

1.9.2 Safety Decal Locations and Details

Replicas of the safety decals that are attached to the conveyor and their messages are shown in the figure(s) that follow. Safe operation and use of the conveyor requires that you familiarize yourself with the various safety

decals and the areas or particular functions that the decals apply to, as well as the safety precautions that must be taken to avoid serious injury, death, or damage.

Figure 1. Safety Decal Locations

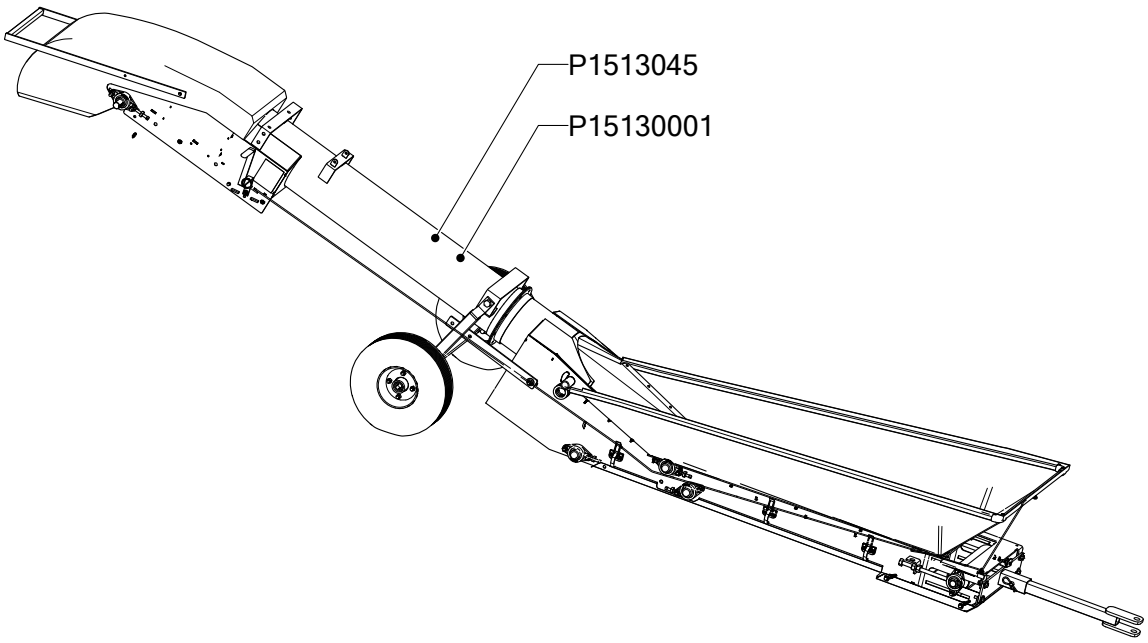

Figure 2. Electric Top Drive Safety Decal Locations

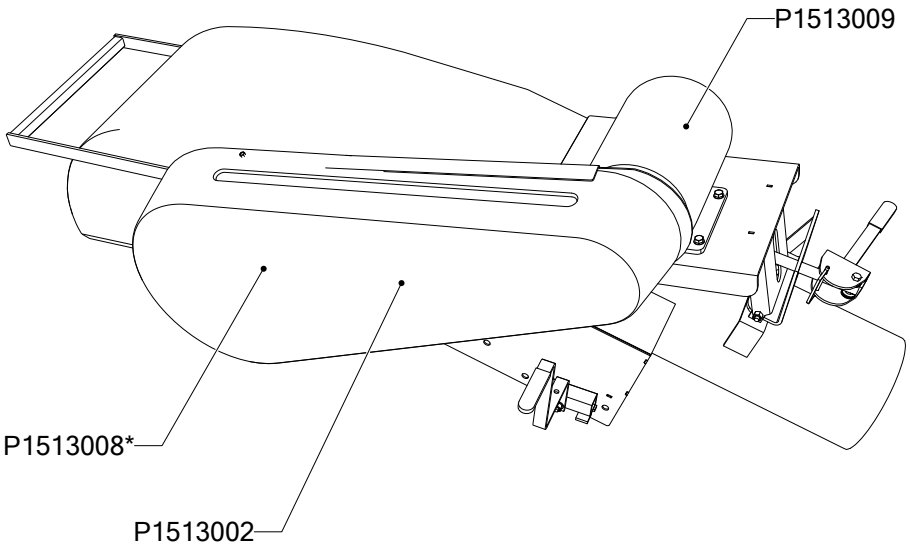

* behind guard

Figure 3. Hydraulic Top Drive Safety Decal Locations

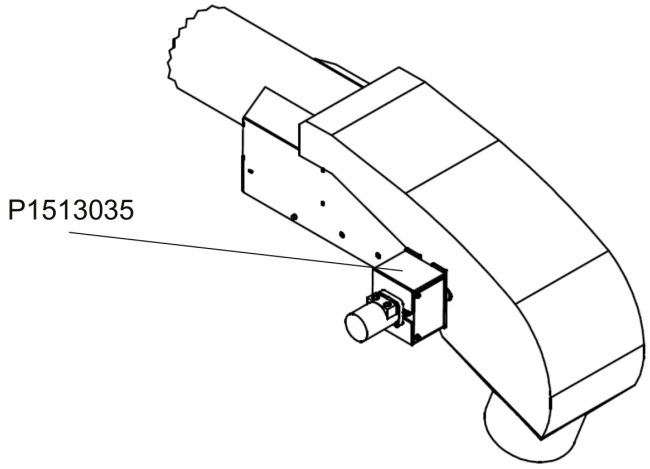

Figure 4. Gas Top Drive Safety Decal Locations

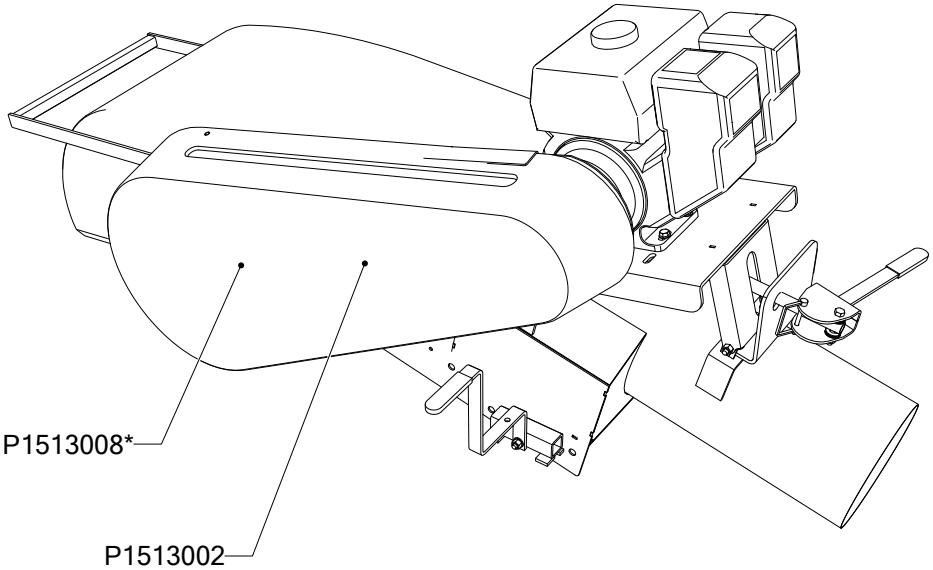

* behind guard

Table 1. Safety Decals

Part Number	Description
P1513052	**NOTICE** To prevent damage, wheels must be free to move when raising or lowering equipment. When equipment is positioned, chock all wheels.
P1513037	**WARNING** **TRANSPORT HAZARD** To prevent serious injury or death: • Securely attach equipment to vehicle with correct pin and safety chains. • Use a tow vehicle to move equipment.

Table 1 Safety Decals (continued)

Part Number	Description
P1513001	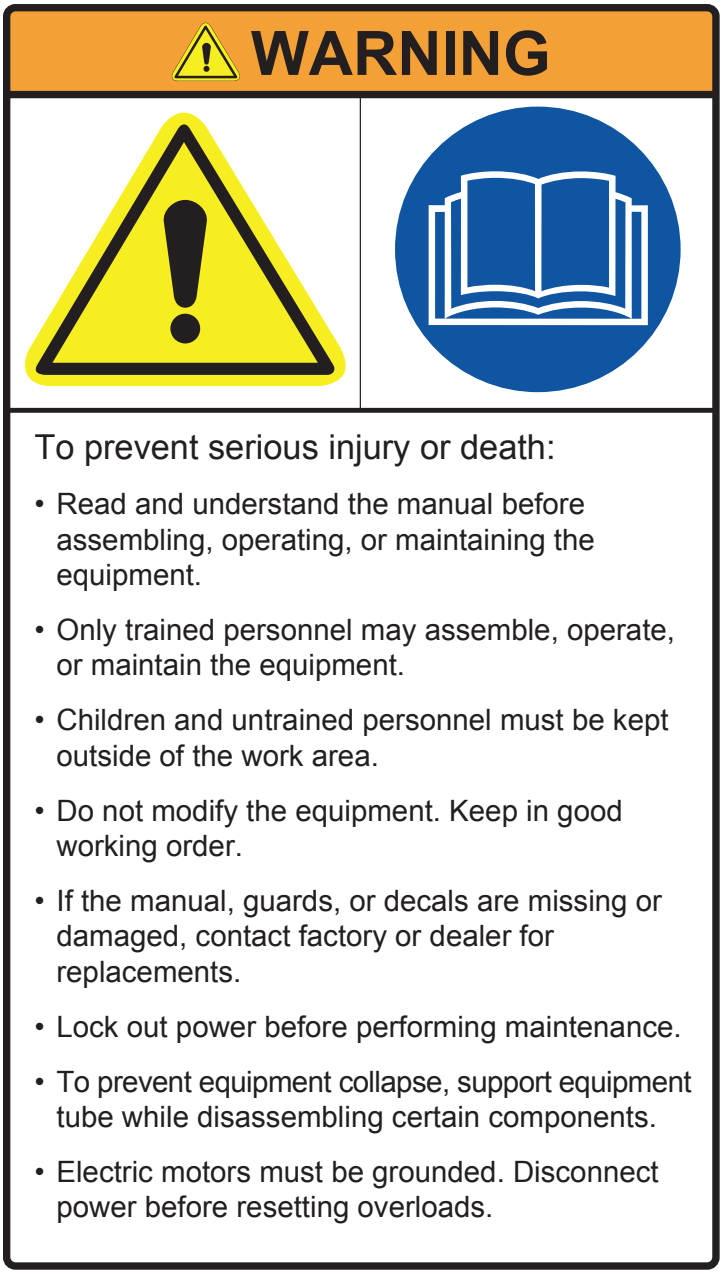

Table 1 Safety Decals (continued)

Part Number	Description
P1513045	
P1513002	

Table 1 Safety Decals (continued)

Part Number	Description
P1513008	
P1513009	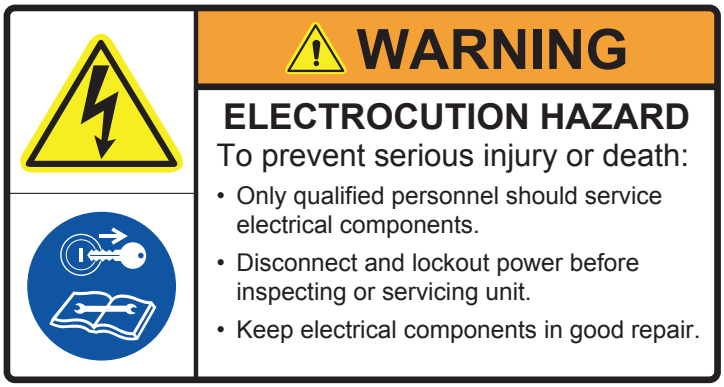
P1513035	

2. Features

This section covers the main features of the conveyor.

Figure 5. Typical Transfer Components

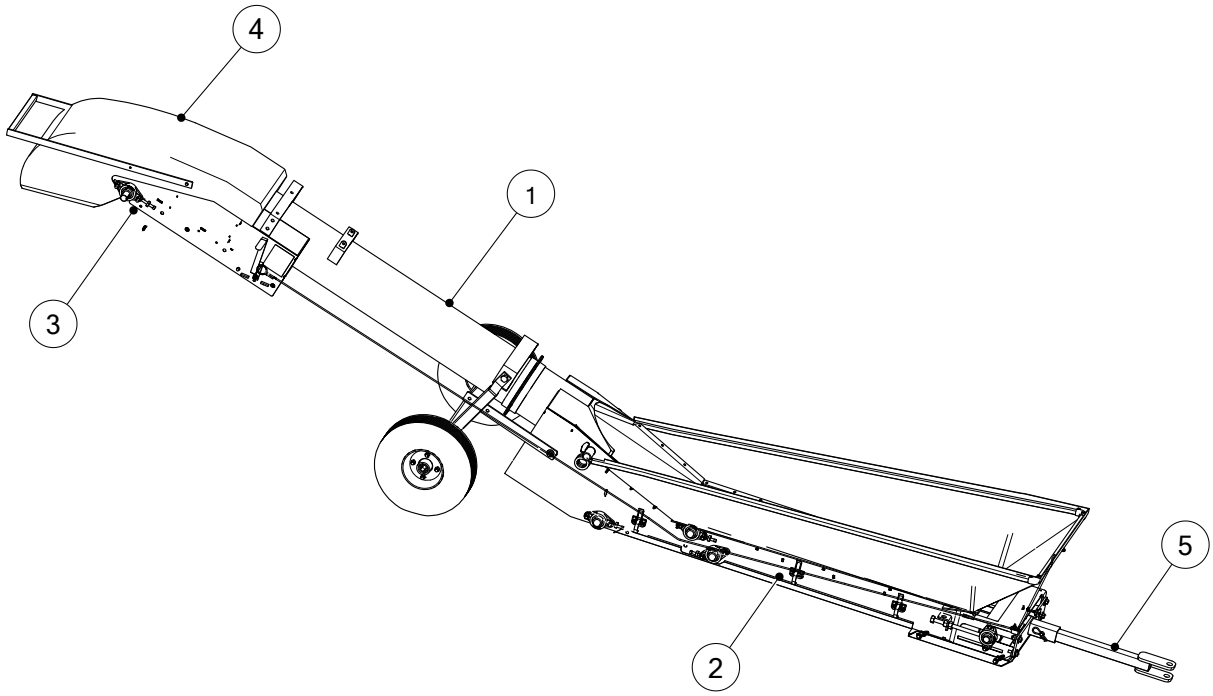

Table 2. Typical Transfer Components

Item	Description
1	Tube
2	Hopper
3	Spout Assembly
4	Hood
5	Hitch

3. Assembly

Before continuing, ensure you have completely read and understood this manual's Safety section, in addition to the safety information in the section(s) below.

3.1. Assembly Safety

WARNING

- Do not take chances with safety. The components can be large, heavy, and hard to handle. Always use the proper tools, rated lifting equipment, and lifting points for the job.
- Carry out assembly in a large open area with a level surface.
- Always have two or more people assembling the conveyor.
- Make sure you have sufficient lighting for the work area.
- Tighten all fasteners according to their specifications. Do not replace or substitute bolts, nuts, or other hardware that is of lesser quality than the hardware supplied by the manufacturer.

3.2. Check Shipment

Unload the conveyor parts at the assembly site and compare the packing slip to the shipment. Ensure that all items have arrived and that none are damaged.

Report missing or damaged parts immediately to ensure that proper credit is received from Batco or your distributor/dealer, and to ensure that any missing parts can be shipped quickly to avoid holding up the assembly process.

Important

Do not assemble or install damaged components.

3.3. Required Tools

- 2 sawhorse(s)
- 1 jack or forklift or overhead crane (850 lb [386 kg] lifting capacity)
- 1 standard socket set(s)
- 1 wrench set(s)
- 1 torque wrench(es)
- 1 power drill(s)
- 1 self-tapping screw bit (3/8")
- 1 tape measure(s)
- 1 level (2' [61 cm])
- 1 level magnetic (2' [61 cm])
- 1 ratchet strap
- 2 C-clamp(s) or vise grip(s)
- 1 tire pressure gauge
- 1 fish tape (120' [36.6 m])
- 1 tire chuck

3.4. Before You Begin

Before you assemble the conveyor:

- Familiarize yourself with all the sub-assemblies, components, and hardware that make up the equipment.
- Have all parts and components on hand, and arrange them for easy access.
- Separate the hardware (bolts, nuts, etc.) and lay them out into groups for easier identification during assembly.
- Ensure there is adequate space to remove the assembled conveyor from the assembly area.

3.5. Hydraulic Fittings and Bolt Tightening

Remember the following basic considerations when tightening hydraulic fittings and bolts:

- Tighten all fasteners to the torque specified in Section 5.1. – Bolt Torque on page 67. Do not replace or substitute bolts, nuts, or other hardware that is of lesser quality than the hardware supplied by the manufacturer.

  All hydraulic fittings should be torqued to the recommended specifications. See Section 5.2. – Fittings Torque Values on page 68.

NOTICE Do not over-tighten fittings! Over-tightening hose fittings can crack the fittings or motor body and will void the warranty.

3.6. Component Locations

Layout Drawing

Be sure to select the proper layout drawing. The dimensions change for each machine depending on the drive option selected. Incorrect placement of the components affects machine balance and can cause a heavy or light intake. The layout drawing is attached to the packing list.

Mark the Tube

Always ensure that the hopper remains level during the attachment of all components that bolt to the conveyor tubing. Use a tape measure to mark out component locations that bolt to the tube. Mark locations on the top side of the tube. Refer to the tube drawing attached to the packing list for layout measurements and component locations.

Tightening Brackets

For all bolt-on brackets and u-clamps, tighten nuts part-way on one side of bracket, then tighten part-way on opposite side. Do this until bracket is fully tightened and ensure it remains level during this procedure.

3.7. Connect the Conveyor Tube to the Hopper

1. Align the conveyor tube and hopper.
2. Fasten the tube flanges together with 7/16" x 1" bolts (2) and 7/16" locknuts (1) (see Figure 6). Ensure the bolts are straight.

   Note

   A punch can be used to assist alignment. If you are not careful, it is possible to bolt the flanges together non-concentrically with the bolts crooked through the holes.

Table 3. Tube Connection Components

Item	Description
1	7/16" Locknut
2	7/16" x 1" Bolt GR8

Figure 6. Typical Tube Connection

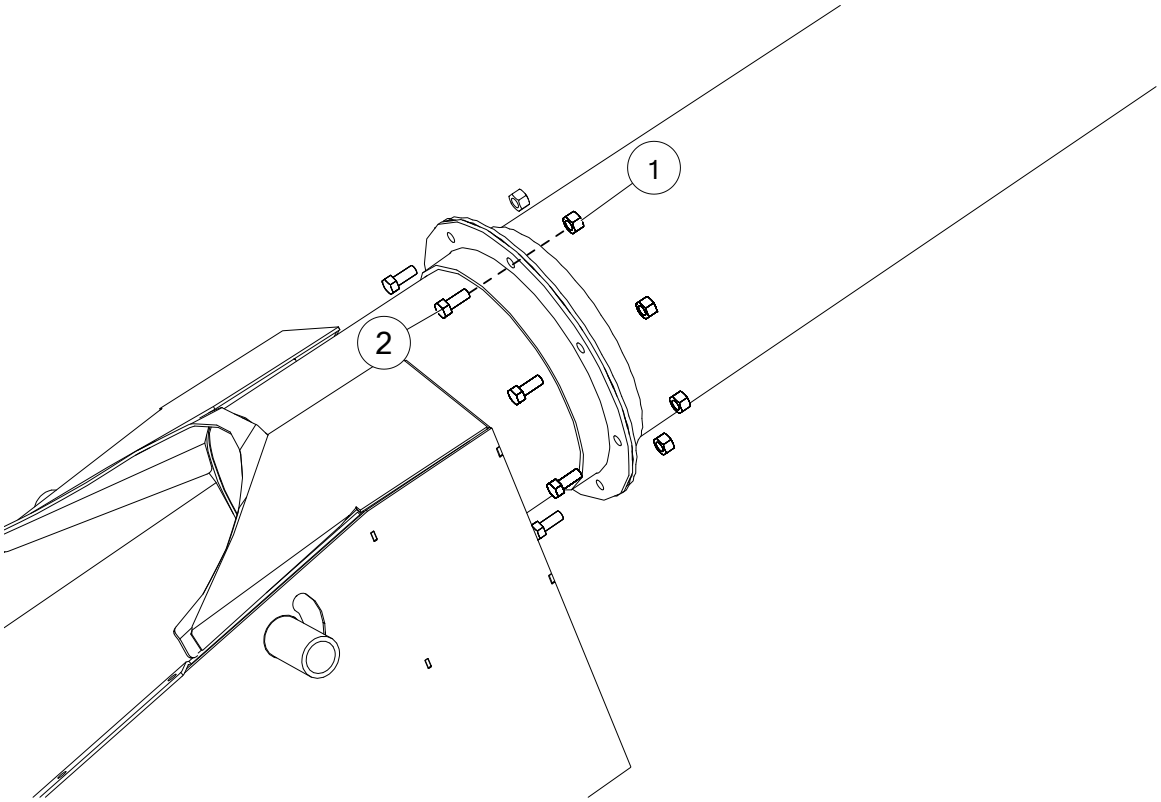

3. Place the assembled conveyor tube and hopper on two support stands (see Figure 7).

Figure 7. Assembled Transfer Tube and Hopper

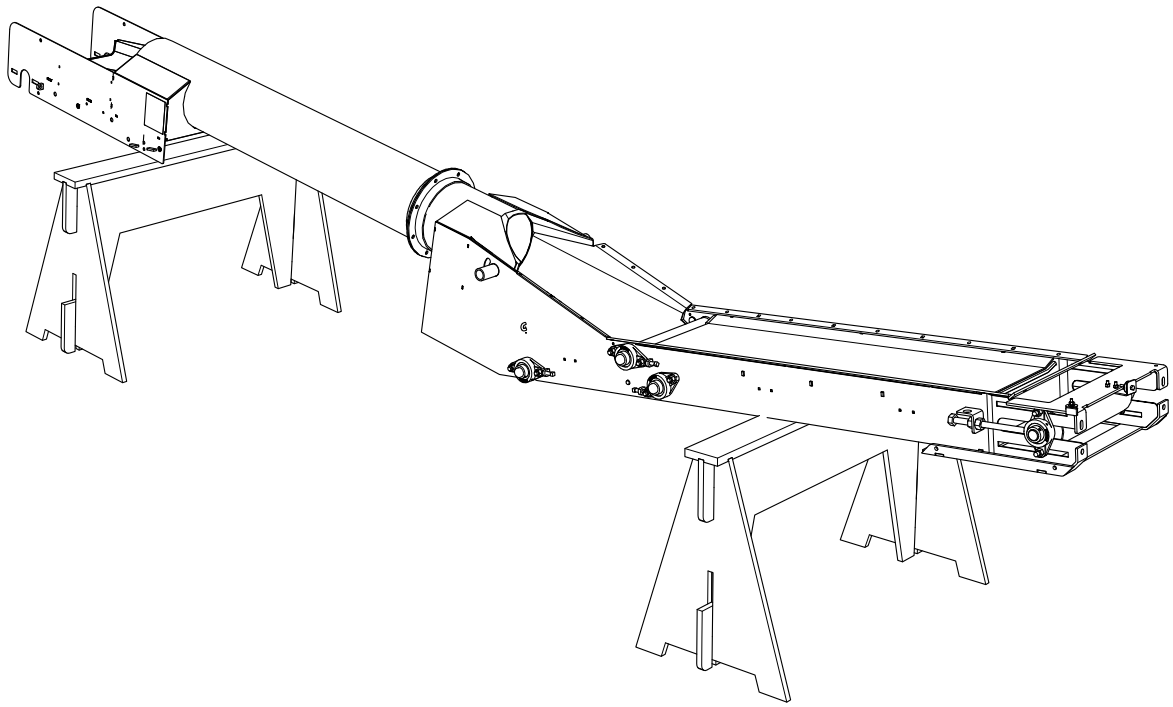

3.8. Serial Number Decal Placement

Place the serial number decal on the conveyor as shown below.

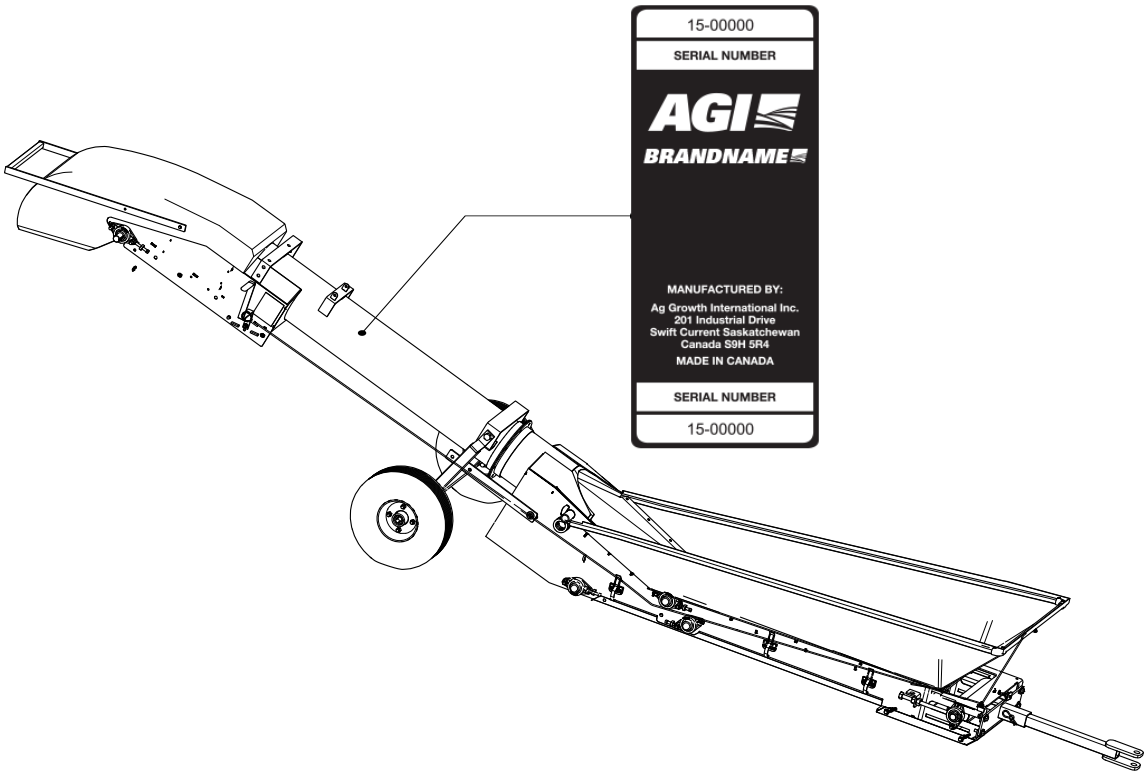

3.9. Install the Spout Roller and Hex Roller

1. Insert the roller (2) into the spout (1) (see Figure 8).

   Important

   Make sure the keyway in the spout roller is installed on the same side of the conveyor as the motor used to drive it (see appropriate drive assembly section).

2. Slide a bearing (5) on each end of the roller and secure to the spout using 1/2" x 2" carriage bolts (3), square flat washers (4), and 1/2" locknuts (6).

   Important

   If the square shoulder of the carriage bolt still sticks through the spout side plates, you must either add a 2nd square washer or tighten up the nut slowly as to not crack the bearing body.

3. Center the roller (2) in the spout.
4. Make sure the roller (2) is positioned straight by measuring the distance (d) from the end of the roller to the end of the spout weldment sidewall on both sides (it should be the same distance).
5. For each bearing, use a hammer and punch to rotate the lock collar so that it seats onto the inner race of the bearing. Tighten the lock collar securely to the shaft with its hex set screw.
6. Insert the 7/16" x 2-1/2" square-head set screws (7) in the spout.

   Note

   The square-head set screws are used to set the alignment of the belt, after the belt is installed.

7. Install the spring-loaded return hex roller (8) into the spout weldment (see Figure 9).

Table 4. Spout Roller Components

Item	Description	Quantity
1	Spout	1
2	Vulcanized Spout Roller	1
3	1/2" x 2" Carriage Bolt	4
4	Square Flat Washer (0.531"-1.00"-0.060")	4
5	1-1/4" Bearing Flange Unit (SAF FL206–20)	2
6	1/2" Nylon Locknut	4
7	7/16" x 2-1/2" Square-Head Set Screw	2
8	Hex Roller	1

Figure 8. Installing Spout Roller

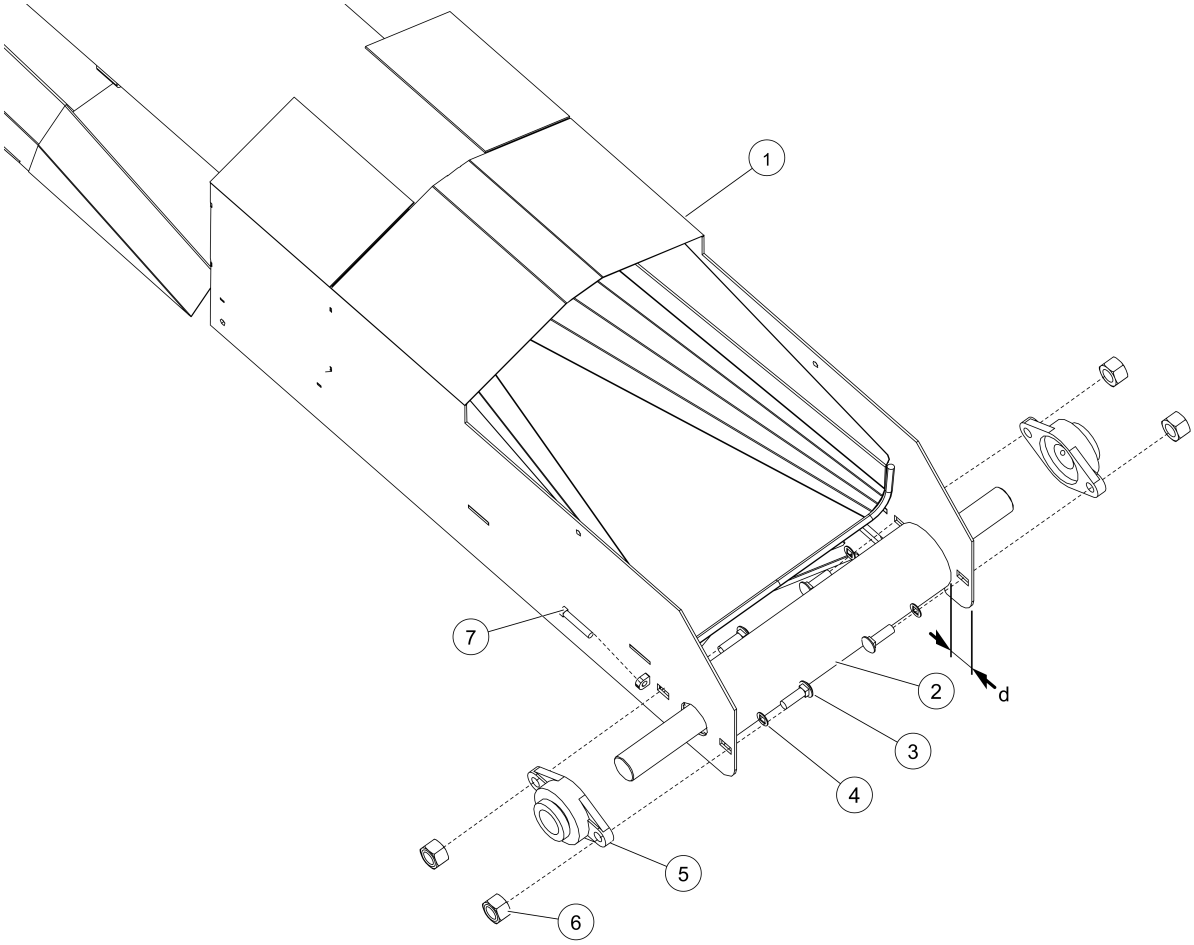

Figure 9. Installing Hex Roller

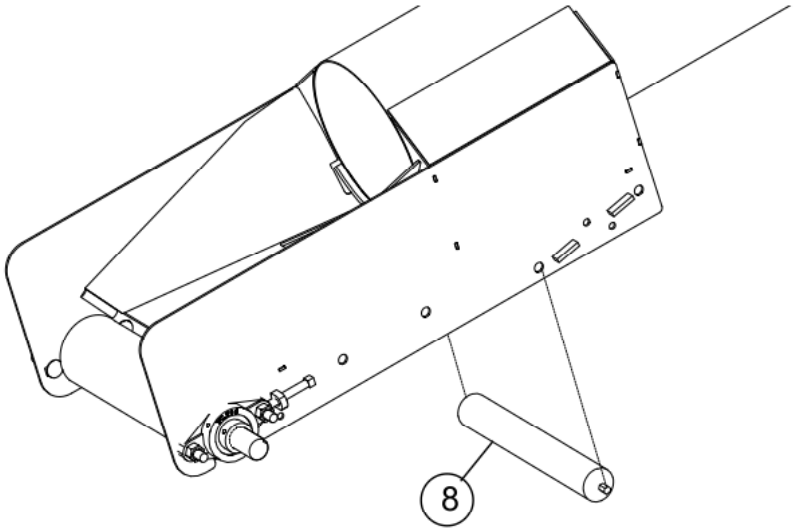

3.10. Install the Hopper Latch Hardware

Table 5. Latch Hardware

Item	Description
1	1/4" x 3/4" Carriage Bolt
2	Spacer
3	Tension Latch Clamp
4	1/4” Flanged Nut

Figure 10. Installing the Latch Hardware

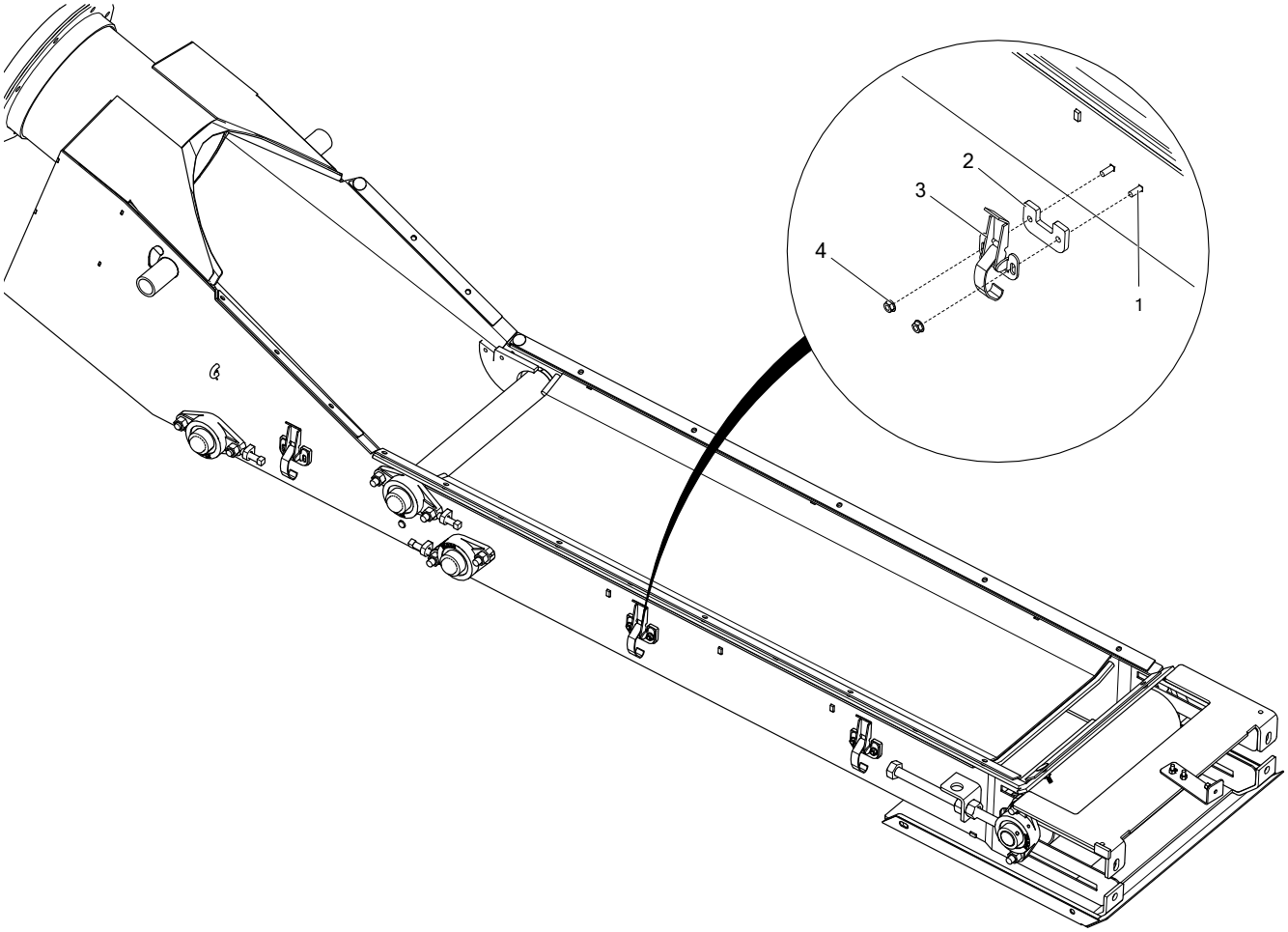

3.11. Install the Belt

This section describes how to install the conveyor belt in the tube. Refer to the packing slip for the length of the conveyor belt used in the installation.

Thread a Fish Tape through the Conveyor Tube

1. Place the rolled belt on a stand behind the hopper.
2. Pull the conveyor belt over the top of the hopper roller, until just inside the hopper, as shown below.

Figure 11. Rolled Belt Behind a Typical Hopper

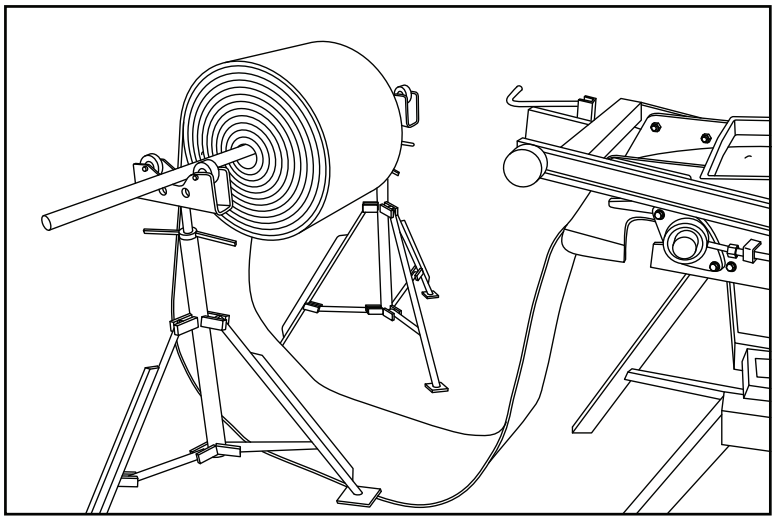

3. Feed a fish tape in at the spout, through the tube, and into the hopper.
4. Manually thread the belt around the transition rollers (1) in the hopper.

Figure 12. Belt Through Transition Rollers

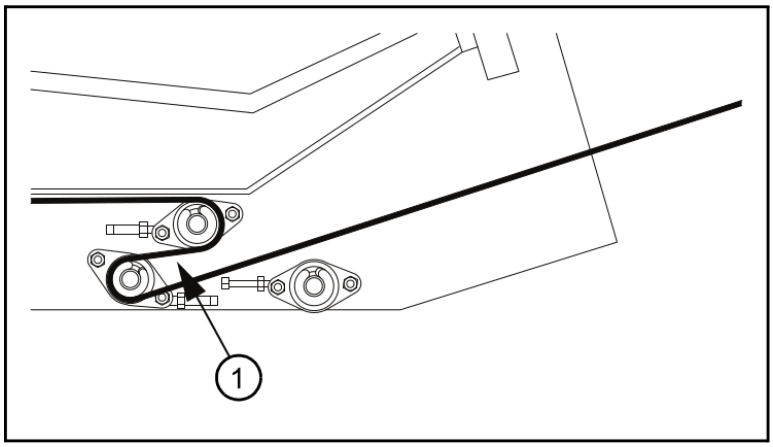

Item	Description
1	Transition Roller

5. Attach the end of the belt to the fish tape using a clamp, or use a short piece of belt and thread the connector wire through the lacing clips to connect.

Figure 13. Attaching the Short Belt Piece to the Belt

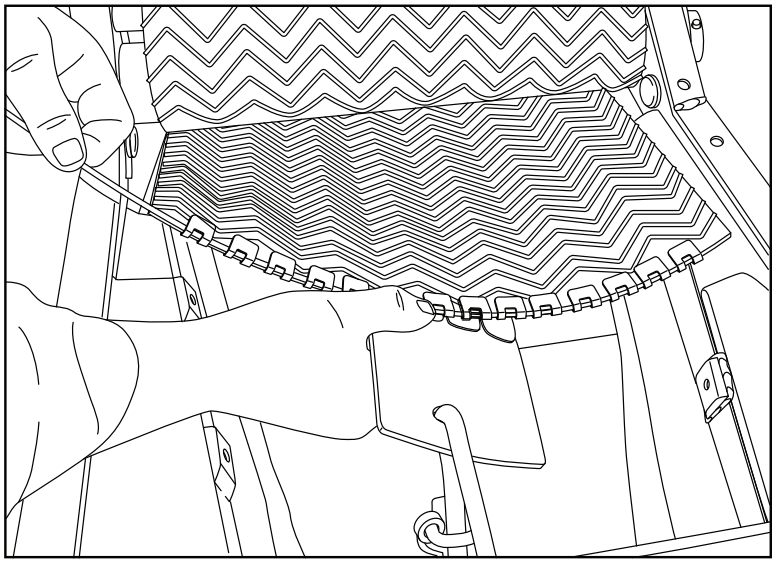

Thread the Conveyor Belt

1. From the spout end, pull the fish tape until the belt emerges from the spout.

Figure 14. Conveyor Belt Pulled Through the Spout

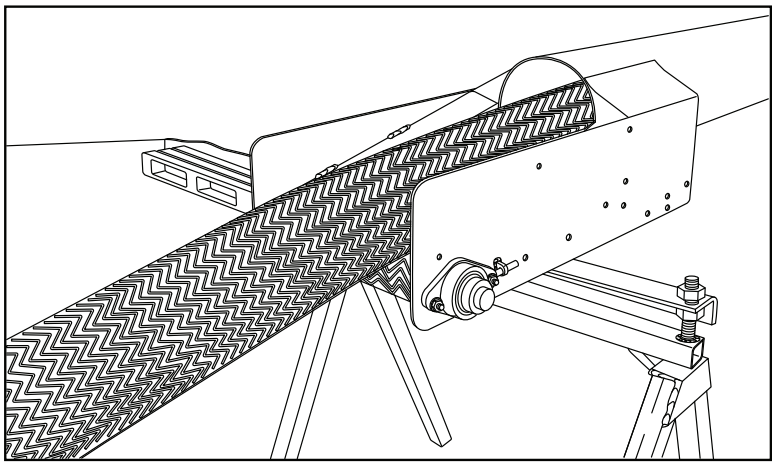

2. Wrap the belt around the spout roller.
3. Pull the belt back and route the belt overtop of the hex roller (1).

Figure 15. Belt Passes Overtop of the Hex Roller

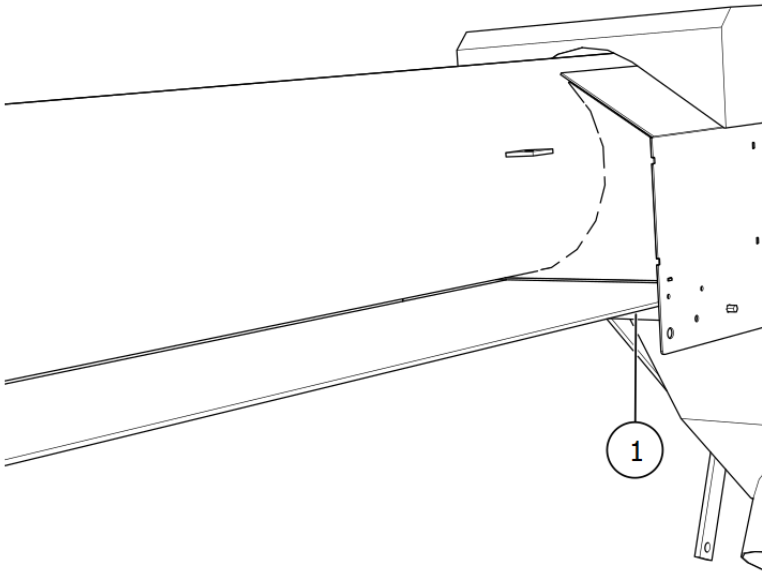

Item	Description
1	Hex Roller

4. Pull the belt under the conveyor tube to the hopper until approximately 6' (1.8 m) of excess belt remains on the stand behind the hopper.

Figure 16. Conveyor Belt Bottom Path

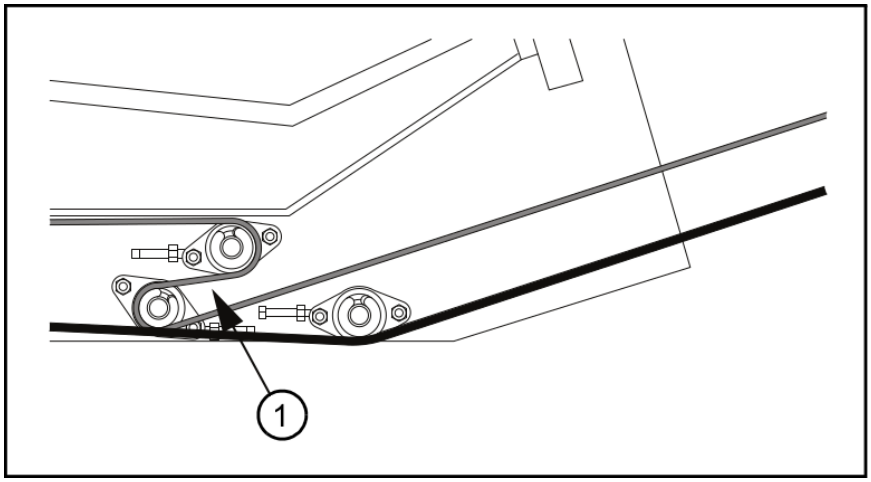

Item	Description
1	Transition Roller

5. Wrap the remaining conveyor belt around the hopper roller (7) and under the tube.

Figure 17. Conveyor Belt Around Hopper Roller

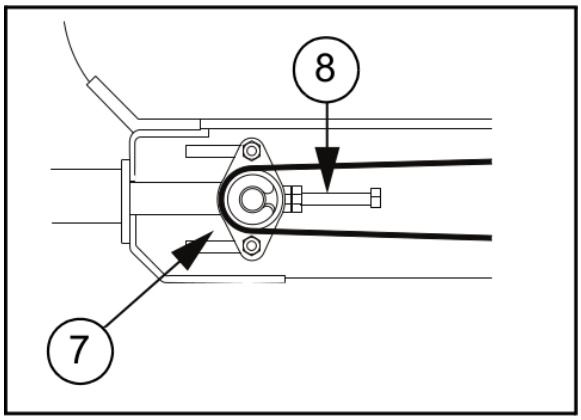

Item	Description
7	Hopper Roller
8	Take-up Bolt

The conveyor belt is now ready to be connected.

Connect the Conveyor Belt

1. Attach a strap puller (1) to each end of the belt and secure with vise-grips (2).

   NOTICE Do not attach the vise grips too tightly, this can damage the belt.

2. Pull the ends of the belt together.
3. Install connector wire through the belt lacing (3).

Figure 18. Using a Strap Puller

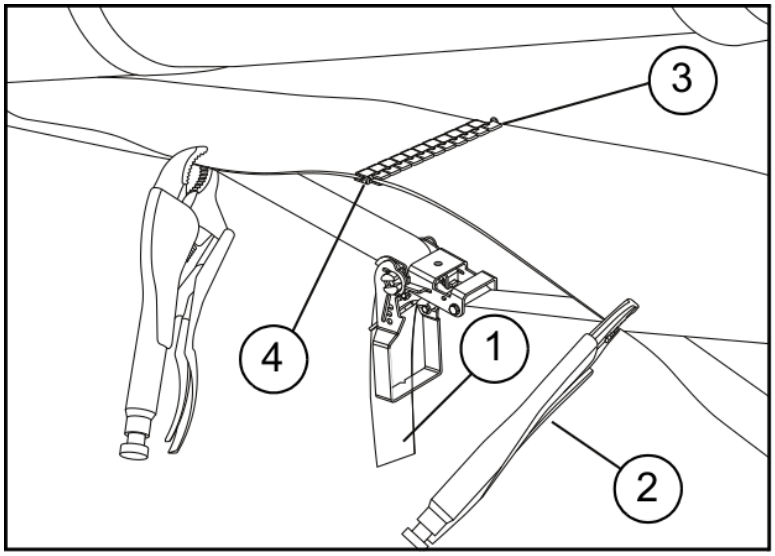

Figure 18 Using a Strap Puller (continued)

Item	Description
1	Strap Puller
2	Vise Grip
3	Belt Lacing
4	Lacing Pin

4. On both corners of the trailing edge of the belt, trim a tapered notch to prevent fraying.

Figure 19. Tapering the Trailing Edge of the Belt

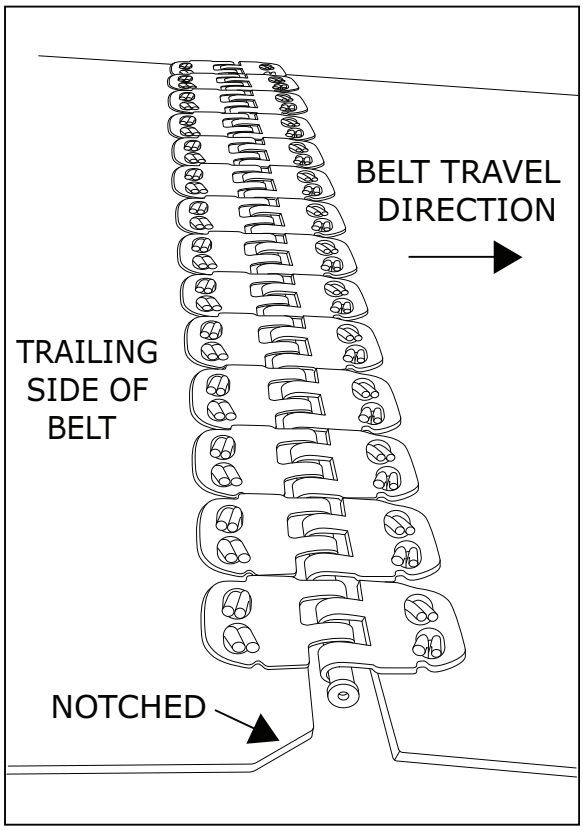

Tighten the Conveyor Belt

Use the hopper roller bolts to set the belt tension.

1. Tighten the hopper roller bolts until the conveyor belt deflects 1–2” when pushed down with a 5 lb force.
2. Measure to be sure both sides are set at the same position.

The belt will require final tension and alignment after the conveyor is fully assembled. Refer to the conveyor operation manual for complete instructions.

3.12. Attach the Hopper Underside Covers

Table 6. Underside Covers

Item	Description
1	Underside Cover, Front
2	Pin Spring
3	Underside Cover, Main

Figure 20. Installing the Underside Front Cover

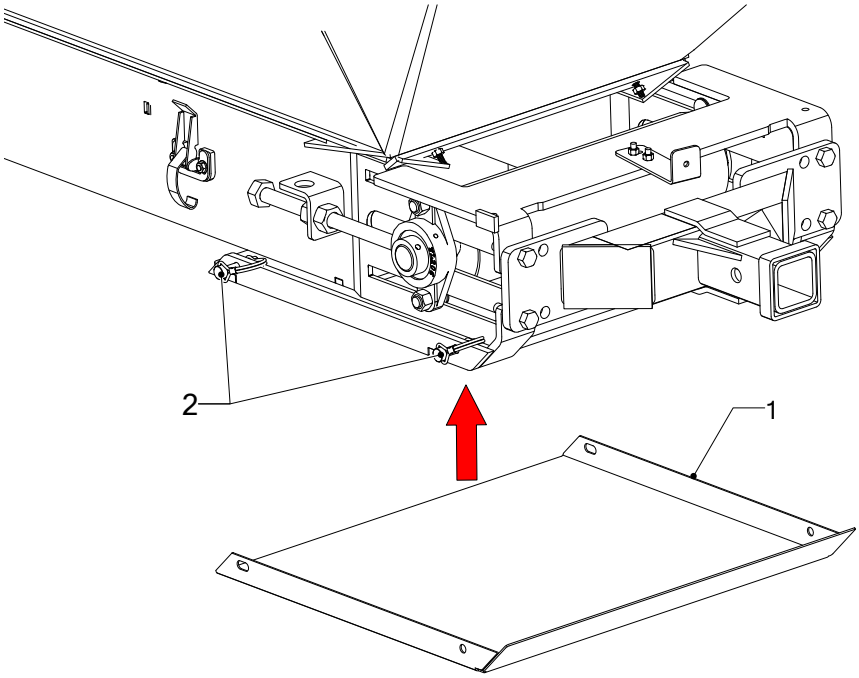

Figure 21. Installing the Underside Main Cover

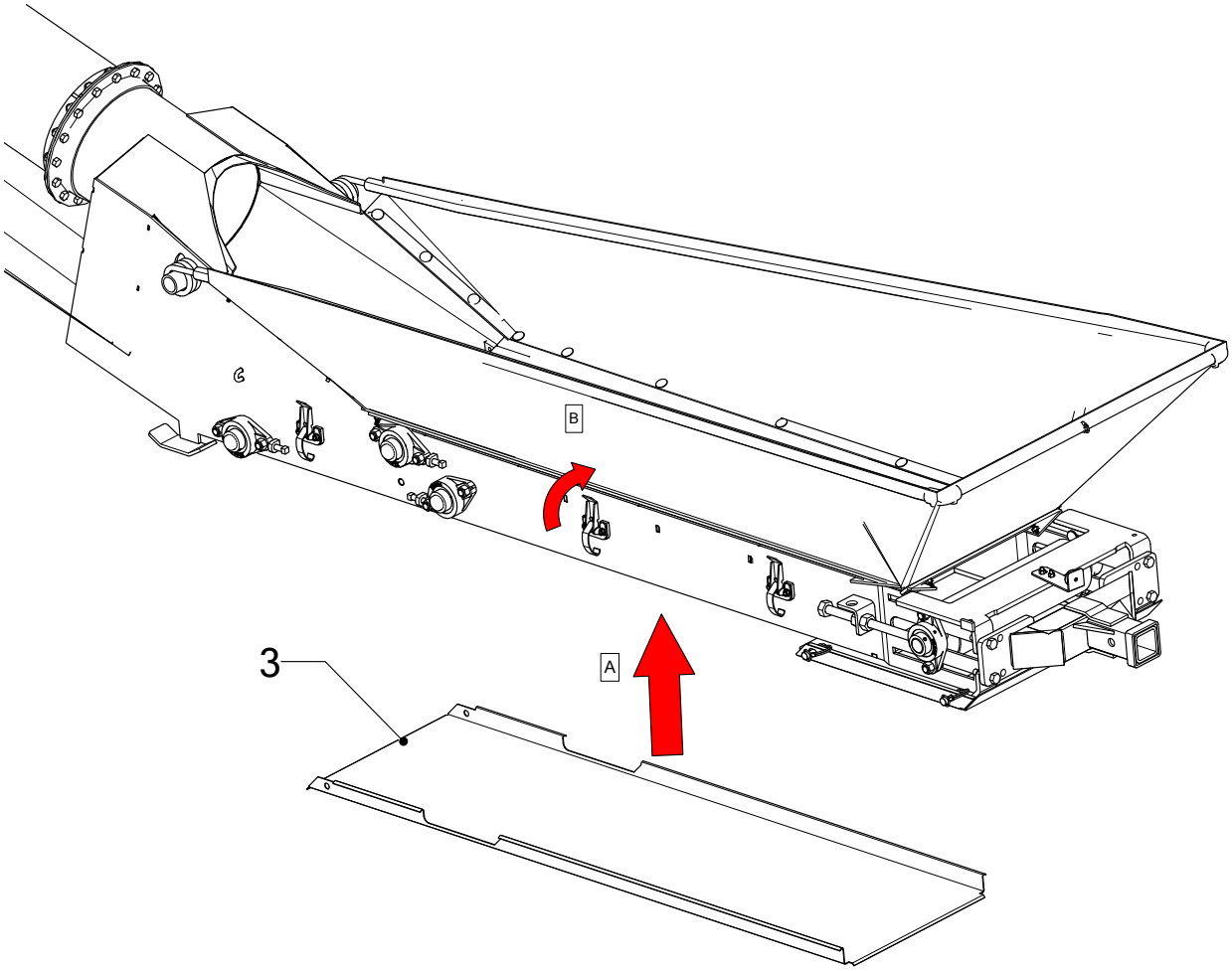

3.13. Install the Collapsible Hopper Cloth

Install the Flashing

1. Lay the front flashing (1) on the hopper while ensuring it is flush with the edge of the main hopper frame (see Figure 22).

   Note

   The textured side of the flashings should be facing down.

2. Install transition flashing (3) using 1/4" x 1" self-tapping screws (4), 1/4" flat washers (5), 1/4" x 1-1/4" flange bolts (6), and 1/4" hex nuts (7).
3. Lay the side flashings (2) on the hopper while ensuring they are flush with the edge of the main hopper frame and overlapping the front flashing.

Table 7. Flashings

Item	Description
1	Front Flashing
2	Side Flashing
3	Transition Flashing
4	1/4" x 1" Self Tapping Screw
5	1/4" Flat Washer
6	1/4" x 1-1/4" Flange Bolt
7	1/4" Hex Nut

Figure 22. Flashings

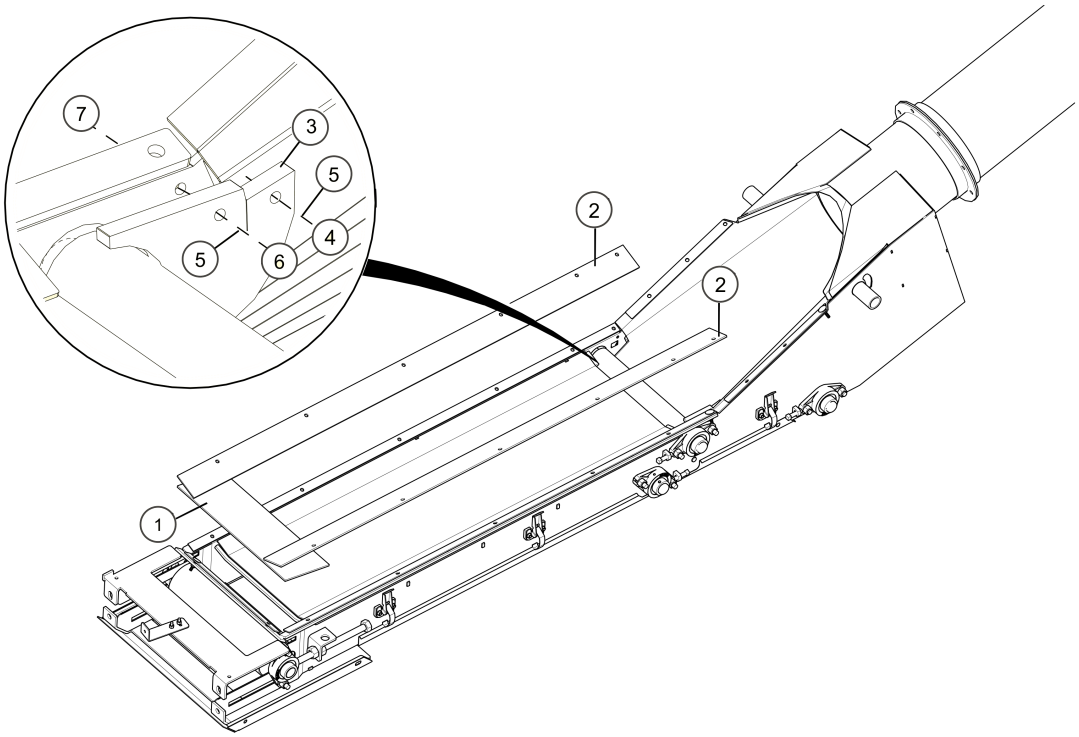

Install the Hopper Spring

1. Slide hopper spring over tubes on the sides of the hopper. See Figure 23 for correct spring orientation.
2. Rotate the spring so that the loop of the spring coil is locked in place by the slot. See Figure 24.

Figure 23. Installing the Hopper Springs

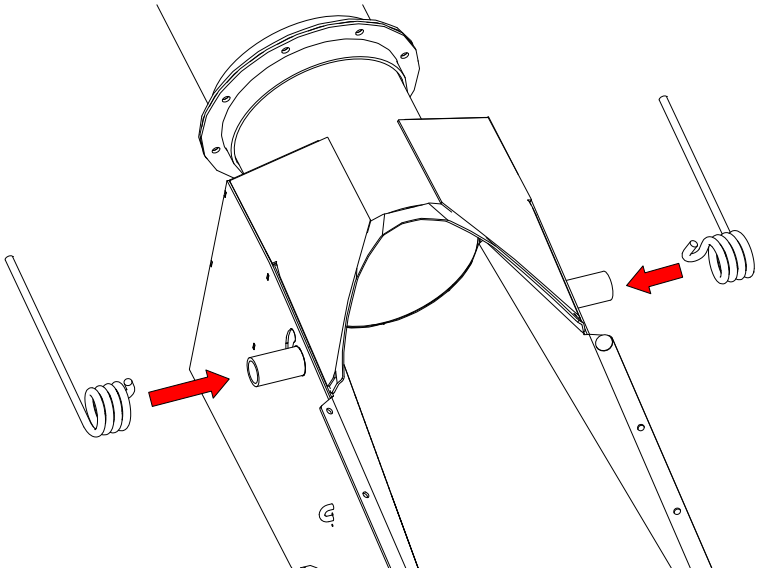

Figure 24. Lock the Hopper Spring

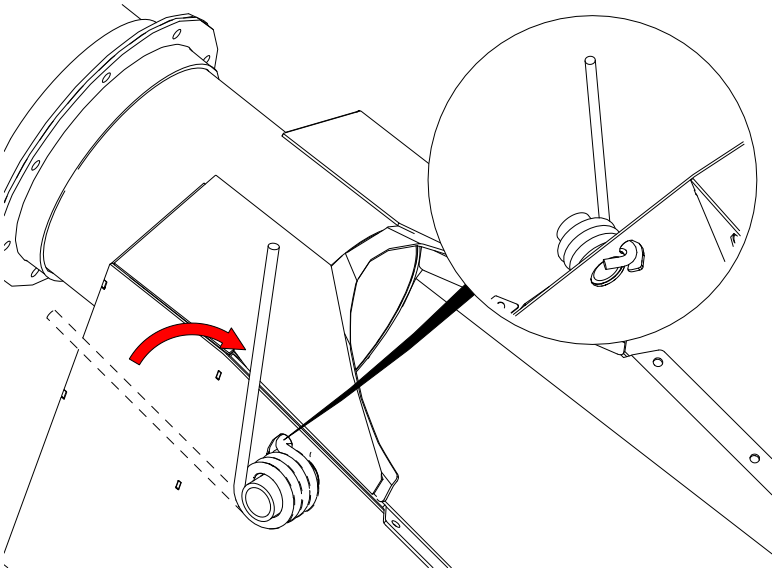

Install the Hopper Cloth

1. Slide the tubes (1, 2) into the hopper cloth (3).
2. Connect the front corners with the slip-on rail fittings (4). Orient the fittings so that the Allen screws are facing down. See Figure 25.

Table 8. Components for Installing the Hopper Cloth onto the Conveyor

Item	Description	Quantity
1	1/2" Pipe Sch 80 (Side)	2
2	1/2" Pipe Sch 80 (Front)	1
3	1/2" Slip-on Rail Fittings	2
4	Hopper Cloth	1
5	1/4" x 1-1/4" Elevator Bolt	20
6	1/4" Nut	20
7	Split Loom (length in feet)	19

Figure 25. Installing the Hopper Cloth Tubes

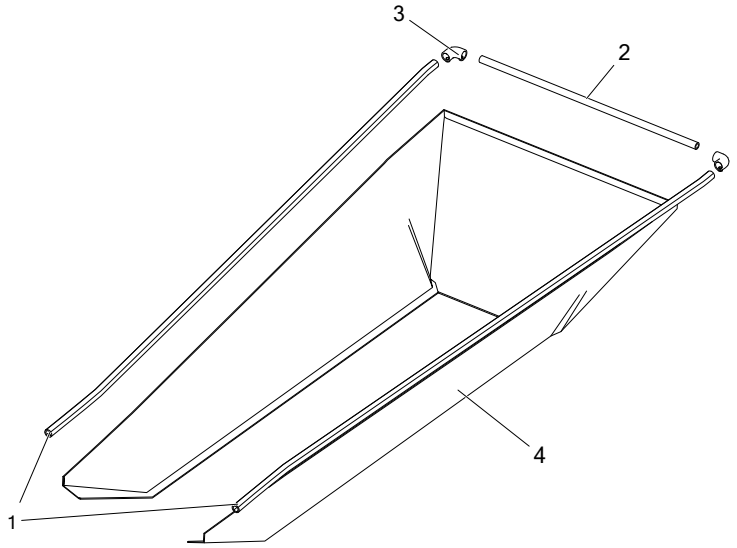

3. Tighten the Allen screws to secure the tubes in place.
4. Slide the open end of the tubes (1) over the hopper springs. See Figure 26.

Figure 26. Installing the Hopper Cloth

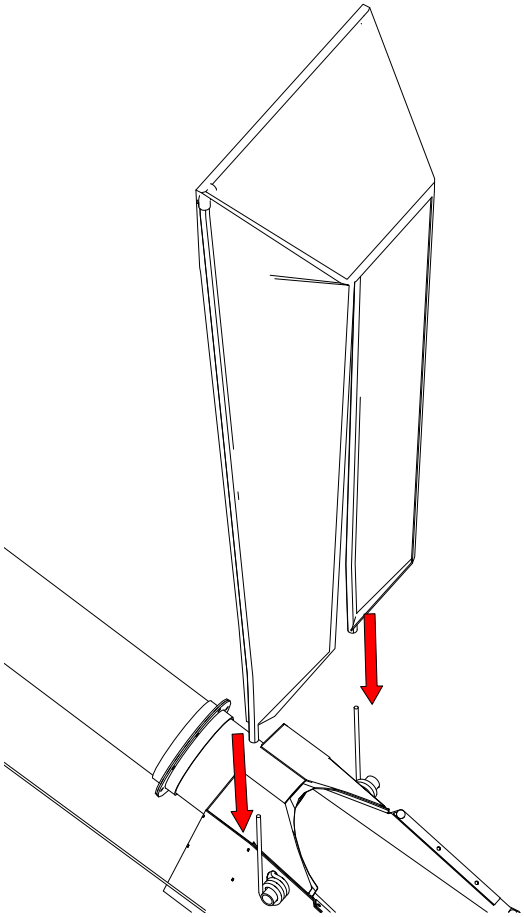

5. Pull the upper front frame down until the bottom of the cloth touches the front flashing, and hold it in place with a bungee cord around the front frame of the hopper weldment (see Figure 27).

   Note

   The length of the upper side frames provides leverage to pull the upper front frame down against the opposing torque of the springs.

Figure 27. Holding Upper Frame with Bungee Cord

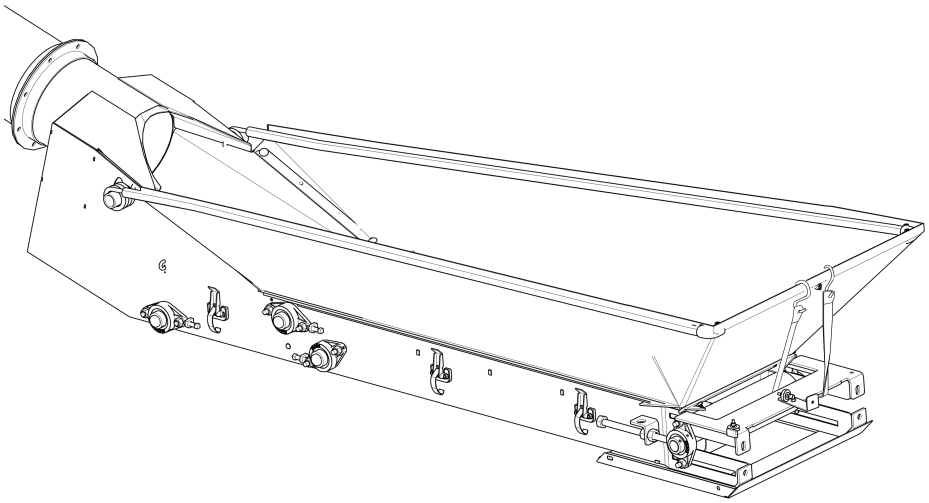

6. Attach the hopper cloth to the conveyor (see Figure 28):
   - First, attach the front of the hopper cloth to the front flashing. Afterward, attach the sides.
   - Drill through the hopper cloth and use the existing holes as a guide through the lower frames, flashings, and hopper weldment.
   - Fasten using 1/4" x 1-1/4" elevator bolts (5) and 1/4" nuts (6).

Figure 28. Installing the Hopper Cloth onto the Conveyor

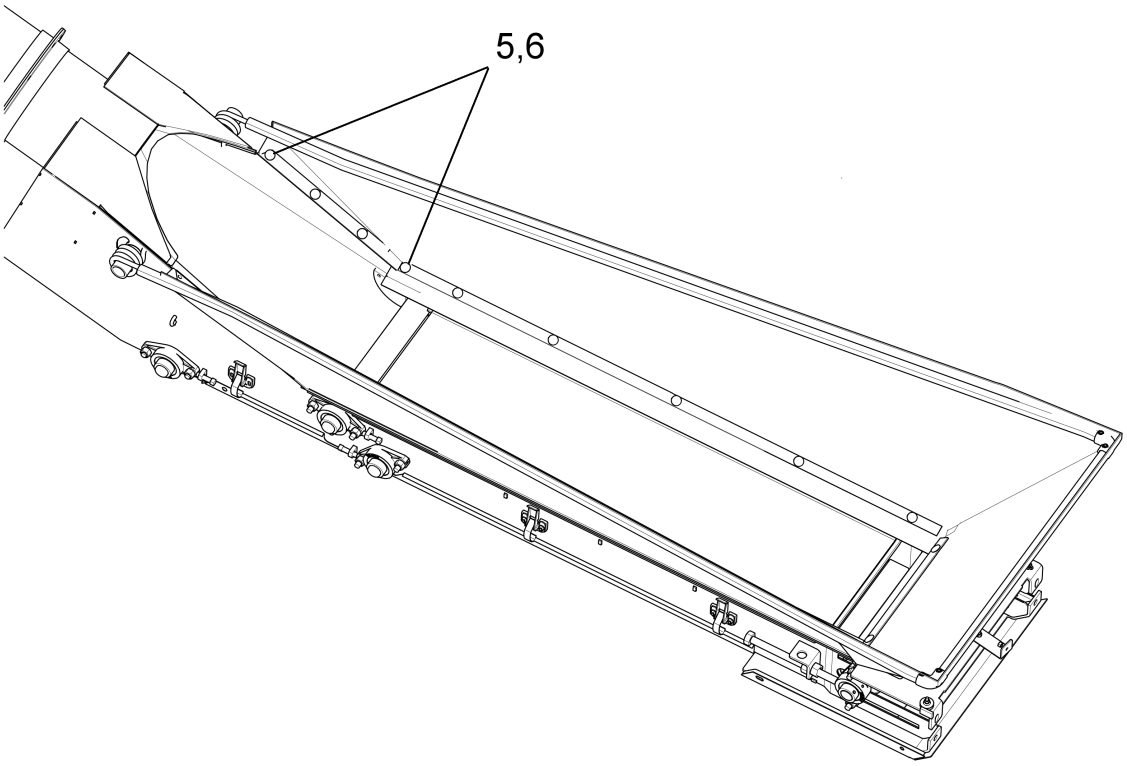

7. Open split loom (7) along the slit and snap over the upper frame to secure hopper cloth.

3.14. Attach the Hitch

1. Attach the hitch (2) to the hopper weldment using 1/2" x 1-1/2" bolts (4), 1/2" flat washers (7) and 1/2" nuts (1).
2. Insert the tongue (3) into the tongue stub.
3. Secure the tongue in place using 5/8" x 3" hitch pin (5) and 3/16" x 3-1/4" hairpin (6).

Table 9. Hitch Components

Item	Description	Quantity
1	1/2" Nylock Nut	4
2	Transfer Hitch	1
3	Straight Tongue	1
4	1/2" x 1–1/2" Hex Bolt	4
5	5/8" x 3" Hitch Pin	1
6	3/16" x 3–1/4" Hairpin	1
7	1/2" Flat Washer	4

Figure 29. Hitch Components

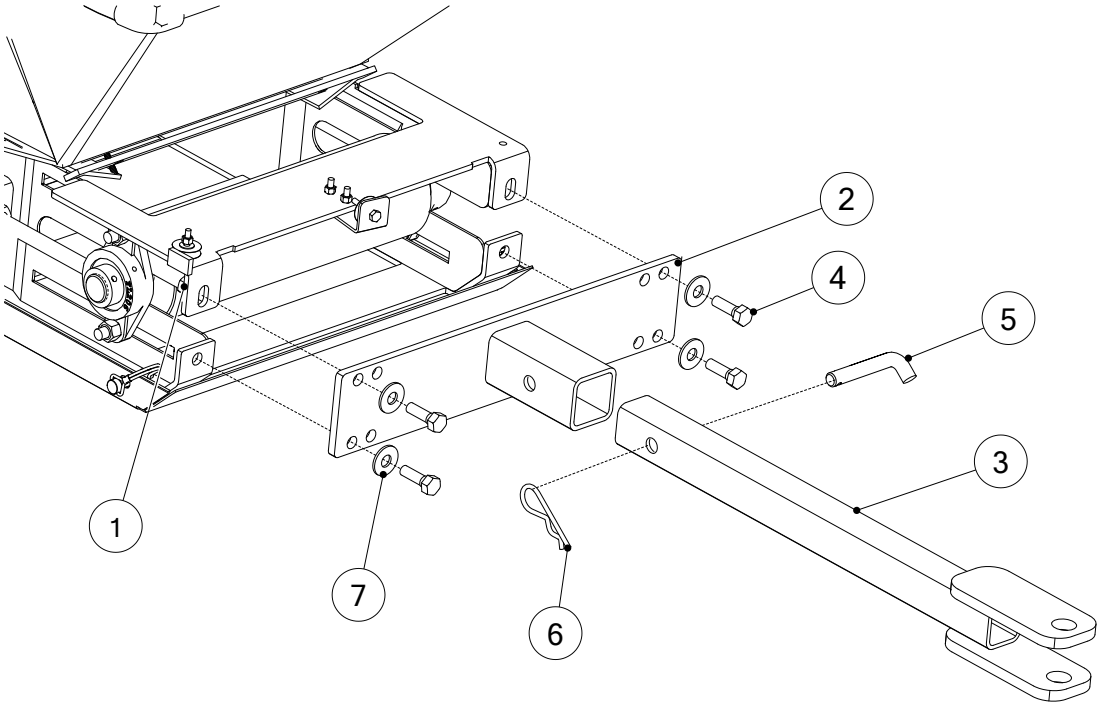

3.15. Install the Spout Hood

1. Position the spout handle (5) at a location on the spout assembly where the self-tapping screws will not interfere with belt operation (see Figure 30).
2. Place the hood (2) around the bearing assembly.
3. Use 1/4" x 1-1/2" self-tapping screws (3) and 1/4" flat washers (4) to tighten the hood (2) to the conveyor spout (1).

   Note

   Make sure the screws will not interfere with belt operation.

Table 10. Spout Hood Components

Item	Description	Quantity
1	Spout Assembly	1
2	Hood	1
3	1/4" x 1-1/2" Self-Tapping Screw	4
4	1/4" Flat Washer	4
5	Handle	1

Figure 30. Installing Spout Hood

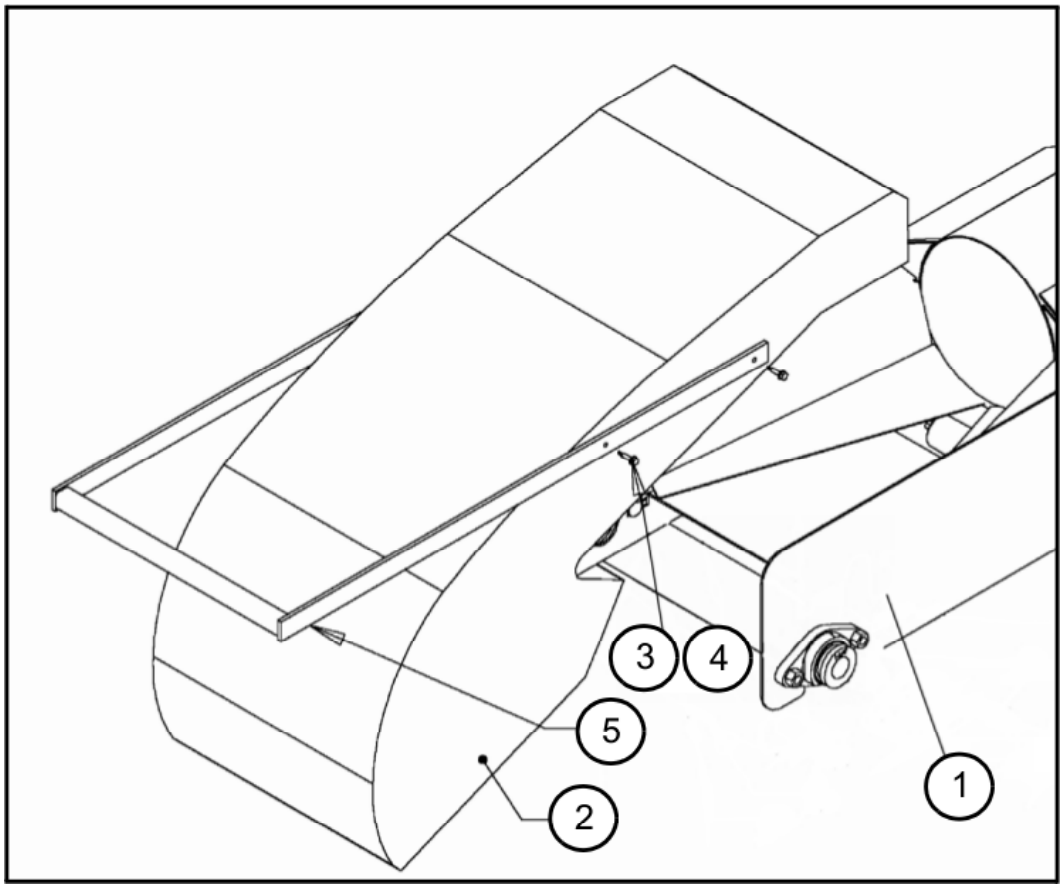

3.16. Install the Collapsible Hopper Cloth Controls

Install the Handle

1. Attach the hopper handle.
   - **Equipped with Hydraulic Drive**: Attach the hopper handle (1) to the spout using a 3/8" x 1–1/2" bolt (5), 3/8" nylon washer (3), and two 3/8" hex nuts (2) (see Figure 31).
   - **Equipped with Gas/Electric Drive**: Attach the hopper handle (1) to the handle mount using a handle spacer (4), 3/8" x 3" bolt (5), 3/8" nylon washer (3), and two 3/8" hex nuts (2) (see Figure 32).

   Note

   Ensure the handle can pivot after tightening the bolt.

Table 11. Handle Components

Item	Description
1	Hopper Handle
2	3/8" Hex Nut
3	3/8" Nylon Washer (USS)
4	Handle Spacer
5	**Hydraulic Drive**: 3/8" x 1-1/2" Hex Bolt
	Gas/Electric Drive: 3/8" x 3" Hex Bolt

Figure 31. Installing the Handle (Hydraulic Drive)

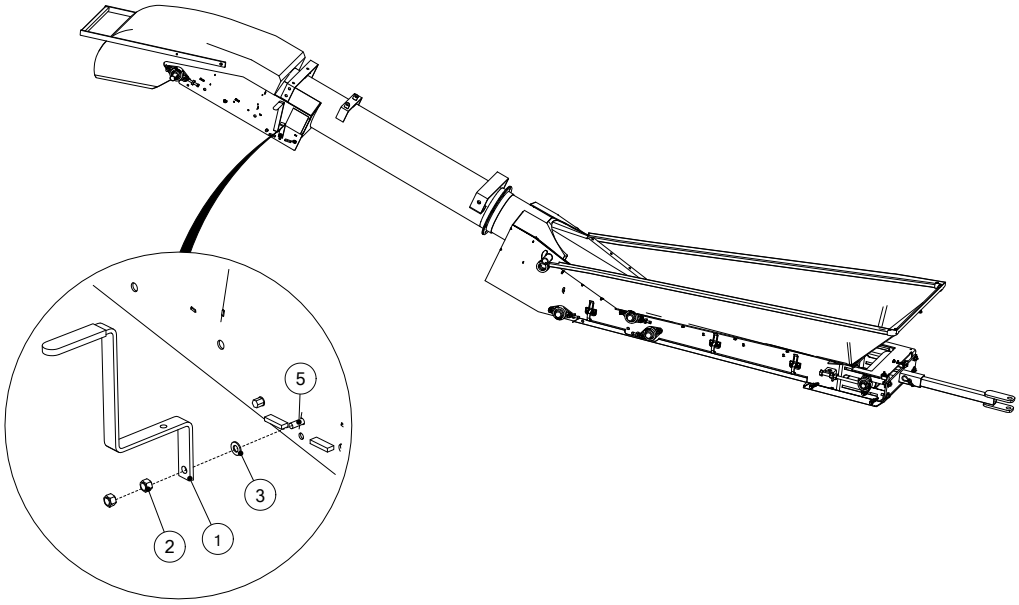

Figure 32. Installing the Handle (Gas/Electric Drive)

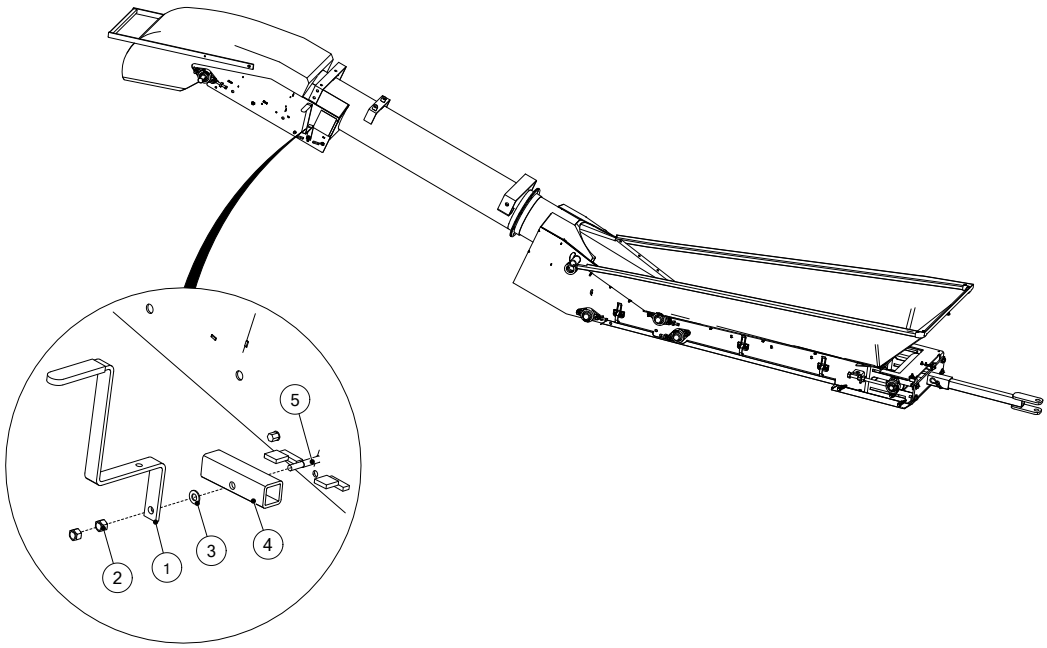

Install the Cable and Clamps

1. Point the hopper handle toward the hopper (see Figure 33).
2. Secure the cable (1) to the handle with a cable clamp (2).
3. Route the cable through the cable rung (3) and around the cable sheaves.
4. Attach a 7/8" cable clamp (4) to the front upper frame using one 5/16" x 1" bolt (5), one 5/16" nut (6) and two 5/16" flat washers (7). See Figure 34 on page 43.
5. Loop the cable (1) around the 5/16" x 1" bolt (5) and secure with 1/4" cable clamp (2).
6. Test the function of the collapsible hopper cloth controls by raising and lowering the handle. Adjust cable tension as required.

Table 12. Cable and Clamp Components

Item	Description
1	1/8" Cable - (for 1515LP: 13' [4.0 m])
2	1/4" Cable Clamp
3	Cable Rung
4	7/8" Cable Clamp
5	5/16" x 1" Bolt Gr8 Plated
6	5/16" Nylon Locknut Gr8
7	5/16" Flat Washer Plated USS

Figure 33. Installing the Cable and the Clamps

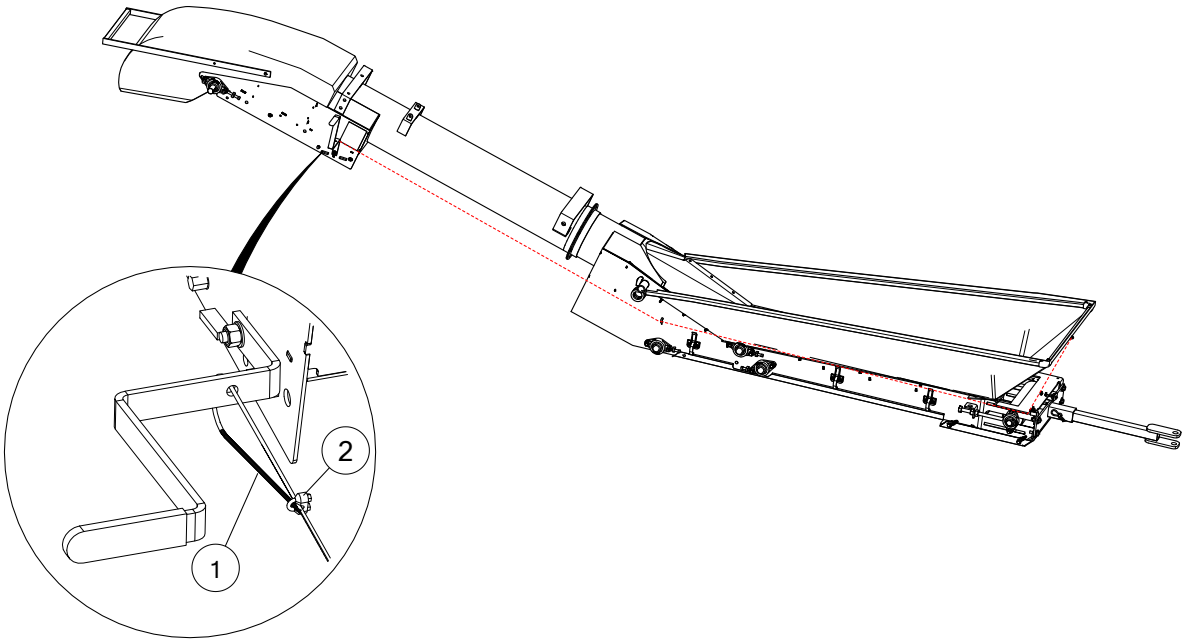

Figure 34. Attaching the Cable to the Hopper Frame

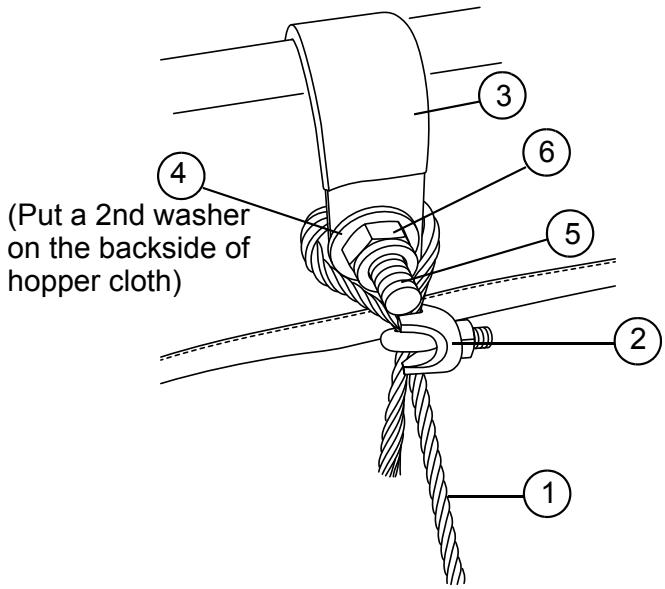

3.17. Assemble the Frame

1. Attach the frame (6) to the weld-on suspension bracket on the tube using two 3/4" x 2" bolts (3) and 3/4" locknuts (2).
2. Fasten the wheels (9) to the frame (6).
3. Attach the adjustable end of the wheel strut (1) to the bolt welded onto the frame (6) and secure with a 1/2" locknut (4).
4. Attach the stationary end of the wheel strut (1) to the hopper with a 1/2" x 1-1/2" hex bolt (8), 1/2" flat washer (7), and 1/2" locknut (4).

Table 13. Frame Components

Item	Description	Quantity
1	Wheel Strut	2
2	3/4" Nylock Nut	2
3	3/4" x 2" Hex Bolt	2
4	1/2" Nylock Nut	4
6	Transfer Frame	1
7	1/2" Flat Washer USS	2
8	1/2" x 1-1/2" Hex Bolt	2
9	Tire Asm - 570X8 LRC	2

Figure 35. Attaching the Frame

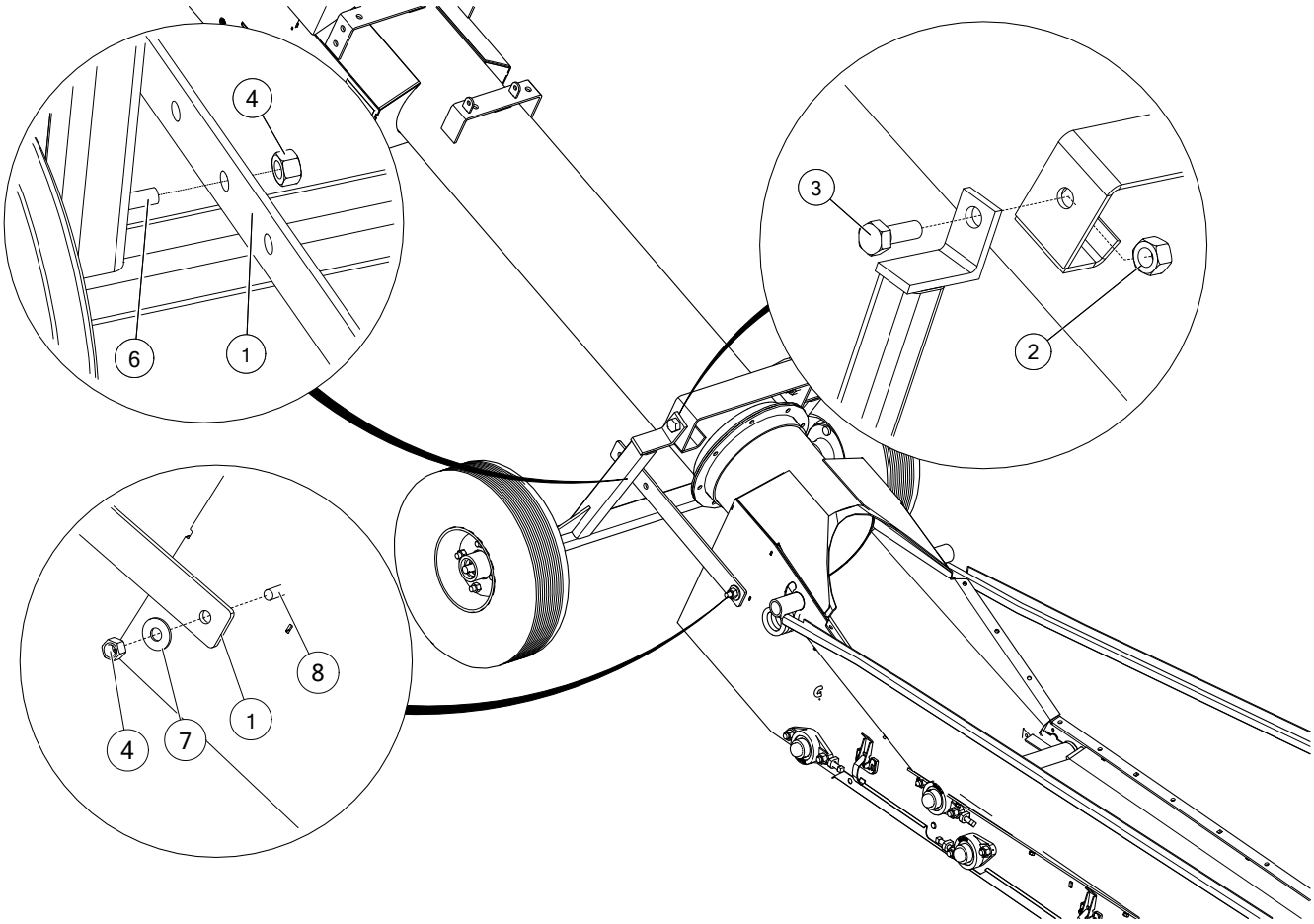

3.18. Drive Assemblies

3.18.1 Install the Electric Drive

Note

The electric motor, drive pulley, and drive hub are not supplied with this option.

Install the Motor Mount Base

1. Attach the mount angle (1) to the tube bracket using 1/2" x 1-1/4" bolts (3) and 1/2" locknuts (4).
2. Attach the angle bracket (2) to the spout bracket using 1/2" x 1-1/4" bolts (3) and 1/2" locknuts (4).
3. Insert a slide bushing (5) into the slot on each side of the motor mount (6). Position the motor mount on top of the angle bracket (2). Secure in place using 3/8" x 15" bolt (7), 3/8" flat washer (8), and 3/8" locknut (9).
4. Attach the mount angle plate (10) to the tube bracket using 3/8" x 1" bolts (11) and 3/8" locknuts (12).
5. Fasten the mount angle plate (10) and motor mount (6) together using 3/8" x 1" bolts (11) and 3/8" locknuts (12).
6. Ensure the motor mount is level.
7. Tighten the bolts.

   Note

   Do not over-tighten the bolts attached to the motor angle plate (10), these joints must pivot.

Table 14. Motor Mount Base Components

Item	Description
1	Mount Angle
2	Transfer Angle Bracket
3	1/2" x 1-1/4" Whiz Bolt Gr5
4	1/2" Whiz Nut Gr5
5	Slide Bushing
6	Motor Mount
7	3/8" x 15" Bolt Gr8 Plated
8	3/8" Flat Washer USS Plated
9	3/8" Nylock Nut Gr8
10	Mount Angle Plate
11	3/8" x 1" Bolt Gr8 Plated
12	3/8" Nylock Nut

Figure 36. Installing the Mount Angle and Angle Bracket

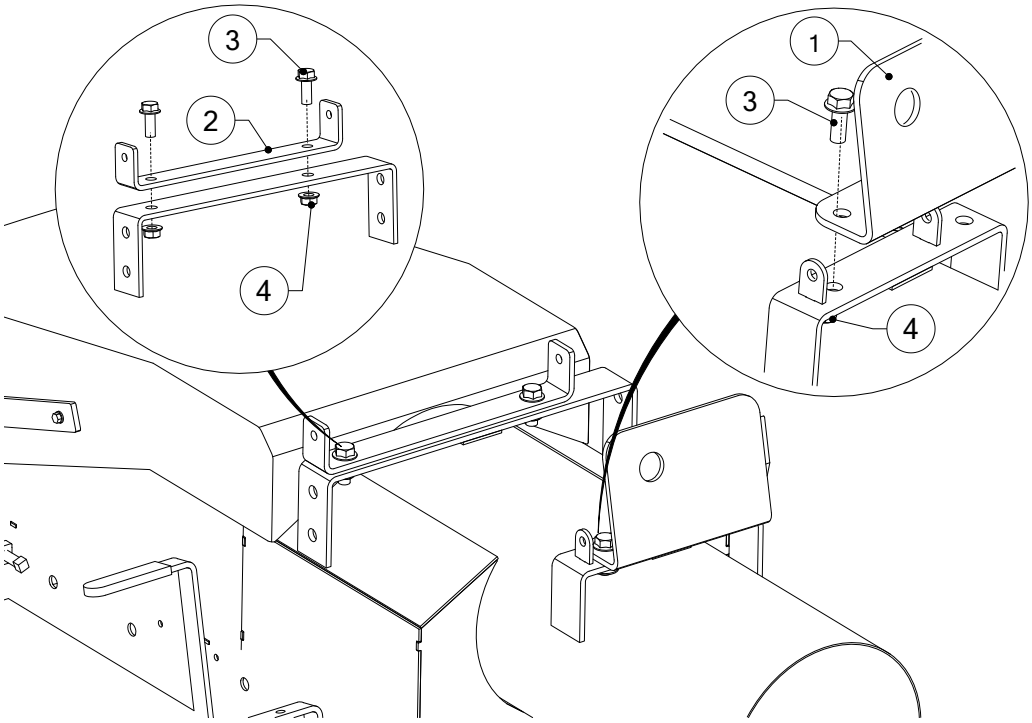

Figure 37. Installing the Motor Mount

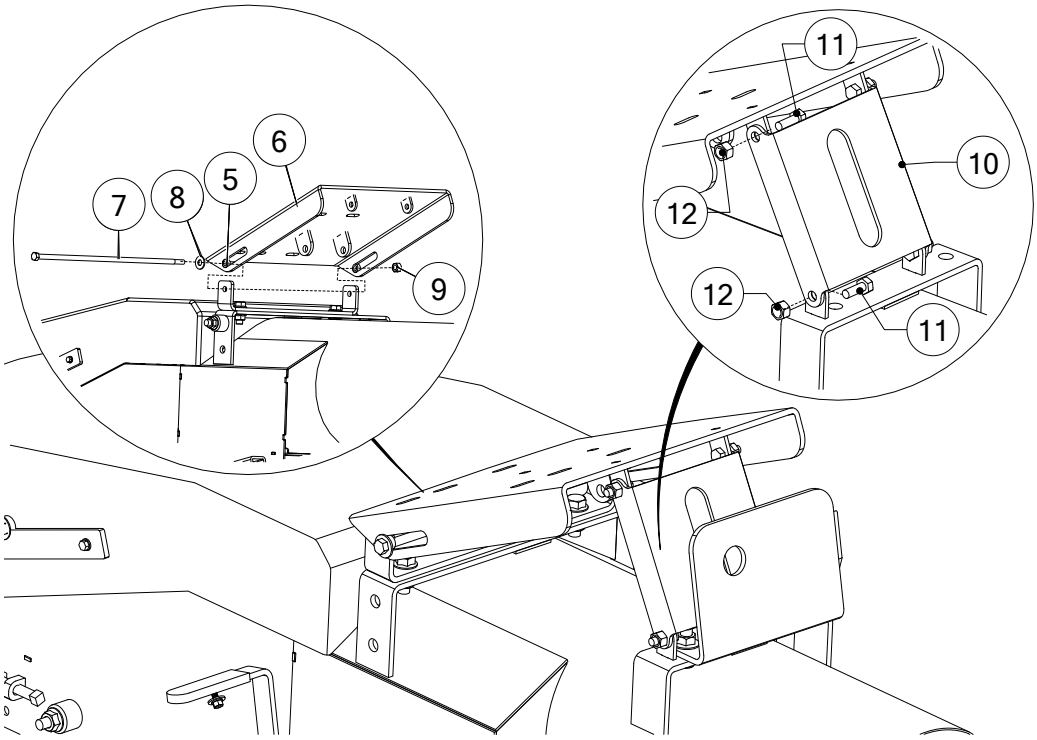

Install the Pivot Handle and Motor

1. Attach the pivot handle shaft (1) to pivot handle (2) using a 3/8" x 2-1/2" bolt (3), eight 3/8" washers (4), and a 3/8" locknut (5). Attach the 1/4" x 2-1/4" quick pin (6).
2. Insert the threaded end of the handle shaft into the mount angle hole and through the motor angle plate slot.
3. Thread a nut pivot (7) to the end of the handle shaft.
4. Fasten the nut pivot to the motor mount using 1/2" x 1-1/4" bolts (8) and 1/2" nuts (9).
5. Place the electric motor (not supplied) on motor mount and fasten with 3/8" x 1-1/2" bolts (10) and 3/8" locknuts (11). Ensure that the electric motor shaft is parallel to spout roller. Leave bolts finger-tight.

Table 15. Pivot Handle and Motor Components

Item	Description
1	Pivot Handle Shaft
2	Pivot Handle
3	3/8" x 2-1/2" Hex Bolt Gr8 Plated
4	3/8" Flat Washer USS Plated
5	3/8" Nylock Nut Gr8
6	1/4" x 2-1/4" Quick Pin
7	Nut Pivot
8	1/2" x 1-1/4" Hex Bolt Gr8 Plated
9	1/2" Nylock Nut
10	3/8" x 1-1/2" Whiz Bolt Gr5
11	3/8" Whiz Nut Gr5

Figure 38. Installing the Pivot Handle

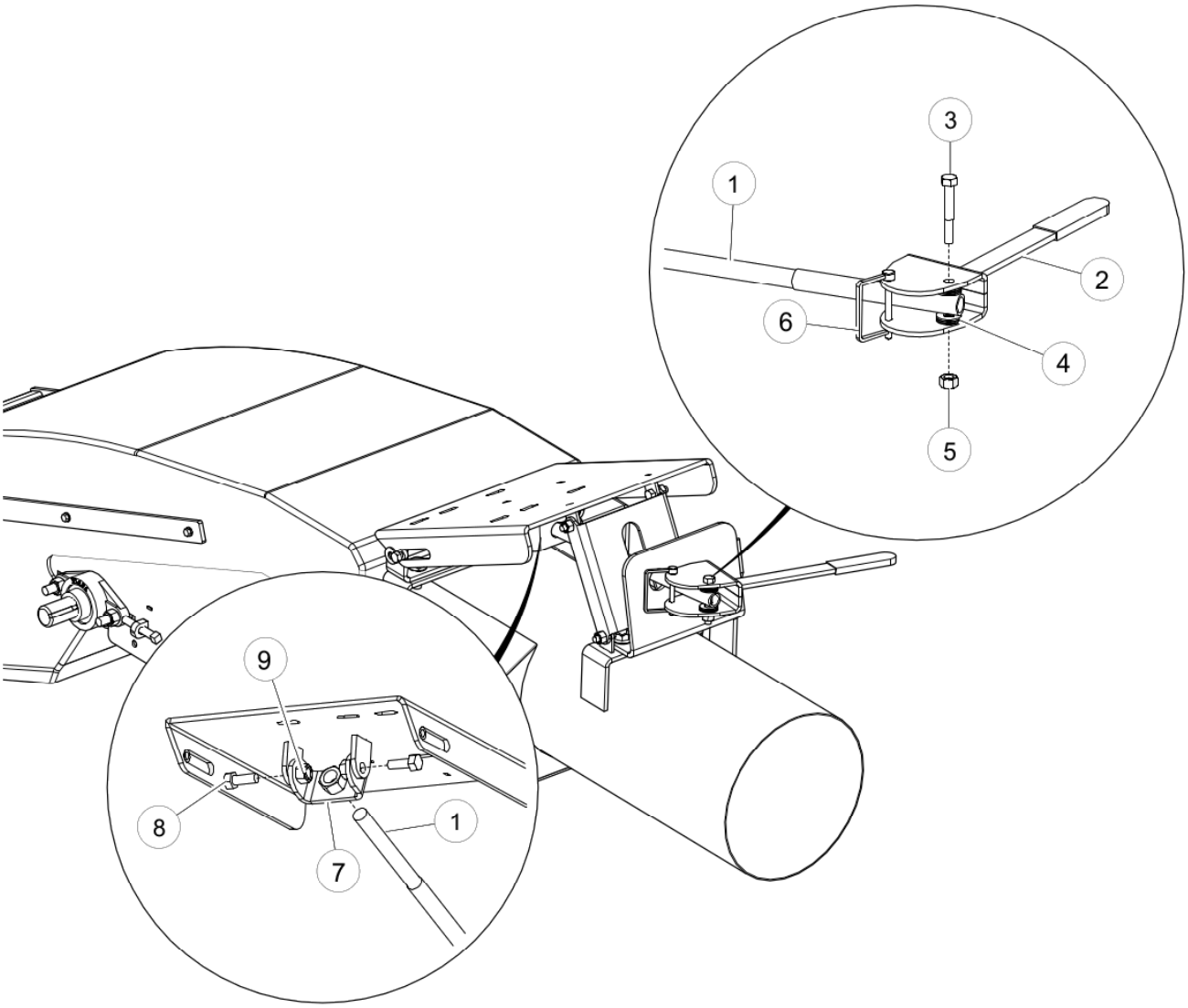

Figure 39. Installing the Motor

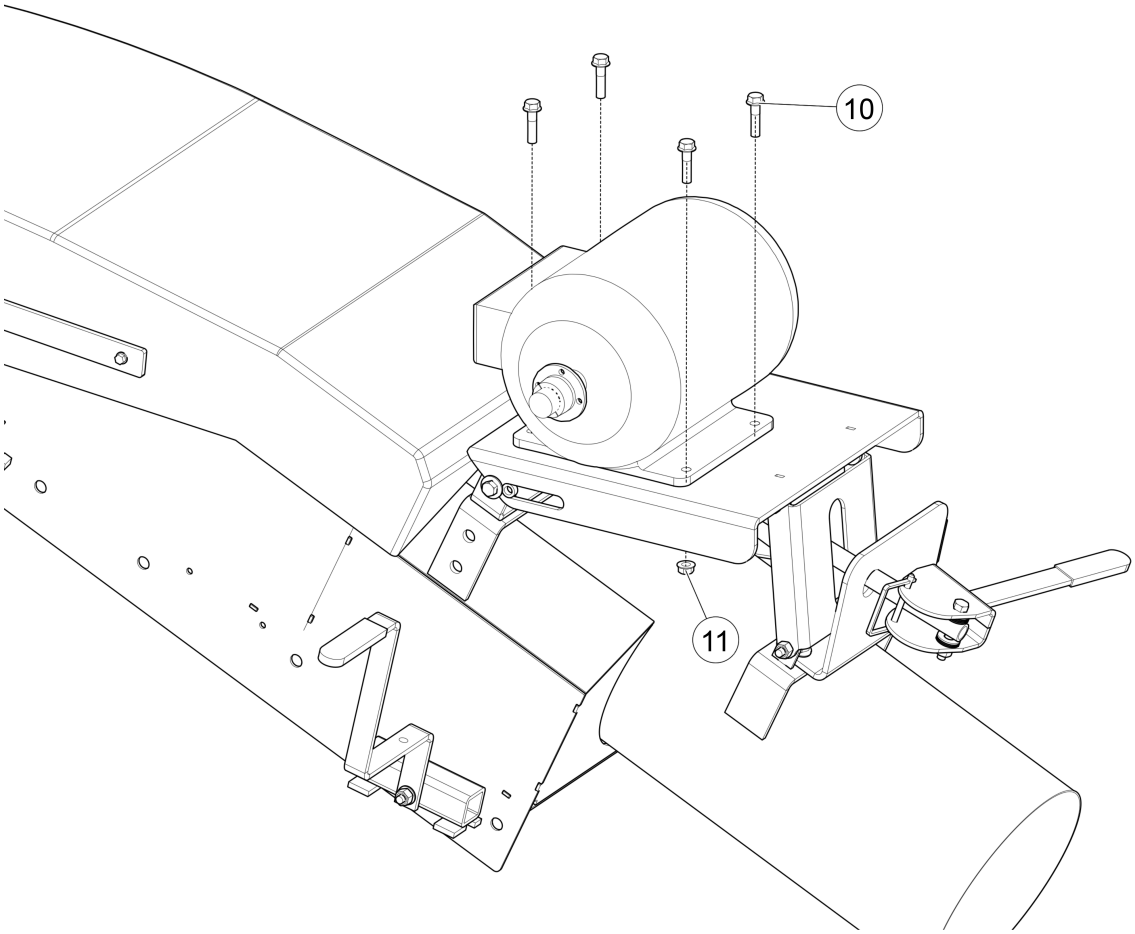

Install the Guard Back Plate

1. Hold the guard back plate (1) in position. Mark and drill a hole in the spout cover to install 3/8" x 2" hex bolt (2). See Figure 40.
2. Insert two 1/2" x 2" whiz bolts (3), one on the spout cover and one on the spout bracket.
3. Attach an idler spacer (4) to each 1/2" x 2" whiz bolt (3).
4. Attach a 1/2" pipe (5) to the 3/8" x 2" hex bolt (2).
5. Place the guard back plate (1). Secure the 3/8" x 2" hex bolt (2) with a 3/8" flat washer (6) and a 3/8" locknut (7). Secure the 1/2" x 2" whiz bolts (3) with 1/2" whiz nuts (8).

Table 16. Guard Back Plate Components

Item	Description
1	Guard Back Plate
2	3/8" x 2" Hex Bolt GR5
3	1/2" x 2" Whiz Bolt GR8
4	Idler Spacer
5	1/2" Pipe-Sch80 (3/4")

Table 16 Guard Back Plate Components (continued)

Item	Description
6	3/8" Flat Washer USS Plated
7	3/8" Nylock Nut
8	1/2" Whiz Nut GR5

Figure 40. Installing the Guard Back Plate

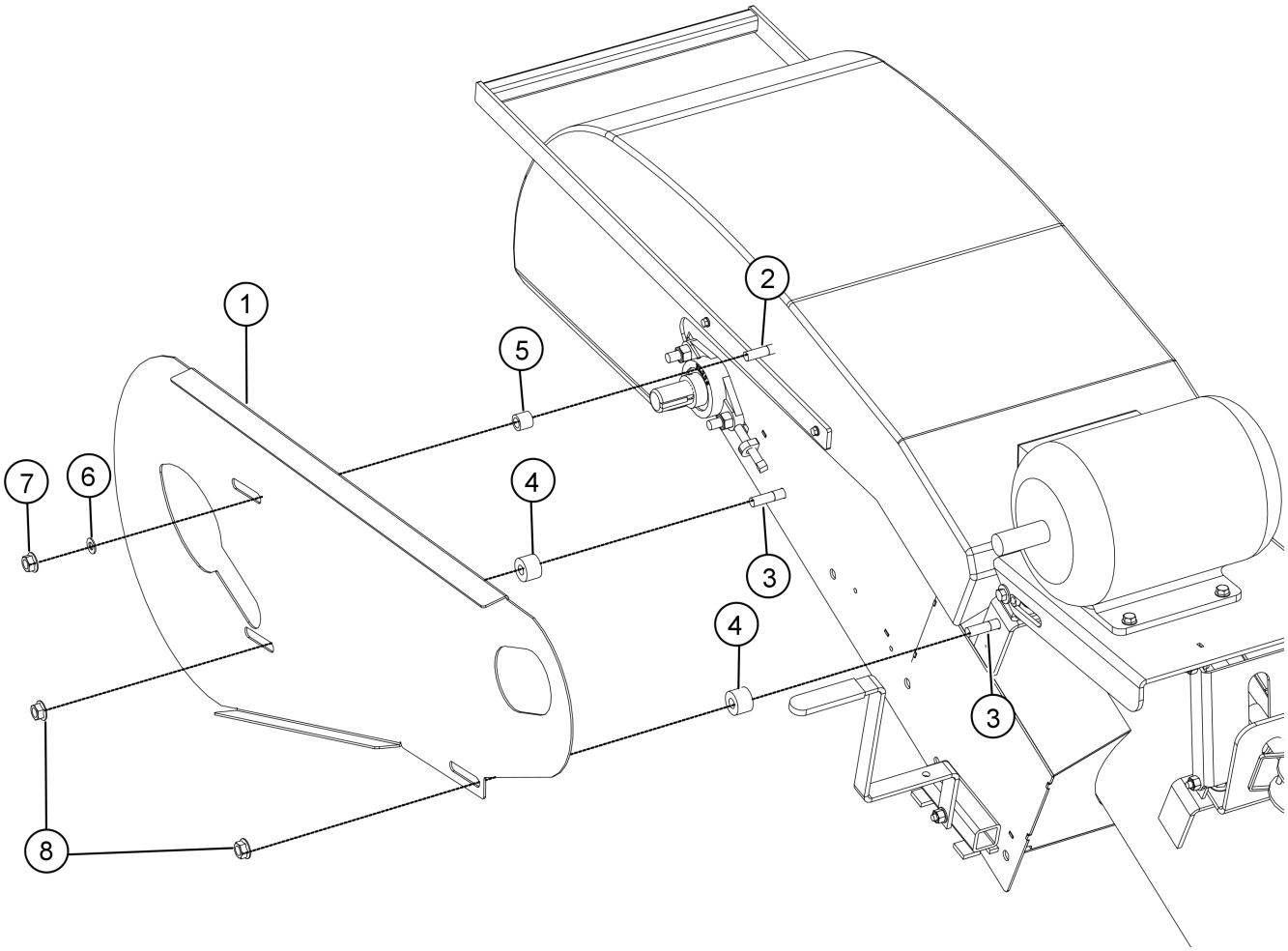

Install the Pulley, Belt, and Pulley Guard

1. Mount the drive pulley (not provided) so the bushing (not provided) is flush with the end of the shaft. Insert the key (not provided) in electric motor shaft. Do not tighten pulley set screw until belt is aligned.
2. Mount the driven pulley (1) so the hub (2) is flush with the end of the shaft. Install key (3) in drive roller shaft. Do not tighten pulley set screw until belt is aligned.
3. Use a straight-edge to align the pulleys. Tighten motor base bolts and tighten the pulley set screws.

   Important

   Once all bolts and set screws are tightened, re-check alignment. Proper alignment will prolong belt life.

4. Place the belts (4) on pulleys. Set tension by adjusting the pivot handle shaft.

   Note

   Belts should deflect 1/2" (1.27 cm) to 3/4" (1.91 cm) when pushed on with a 5 lb (22.2 N) force.

5. Verify the appropriate safety decals are in place on and under the pulley guard (5).

   Note

   See the decal location diagram in the Safety Chapter.

6. Hold the pulley guard (5) over the belt and secure to the guard back plate using 1/4" x 1" self-tapping screws (6) and 1/4" flat washers (7).
7. Install the shaft guard. See Section 3.19. – Install the Shaft Guard on page 64.

Table 17. Pulley, Belt, and Pulley Guard Components

Item	Description
1	Pulley BK120H
2	1-1/4" Hub H
3	1/4"x1-1/2" Key
4	Belt B87
5	Pulley Guard-46.5"L -7" to 16"
6	1/4" x 1" Tek Screw
7	1/4" Flat Washer USS Plated

Figure 41. Installing the Pulley and Belt

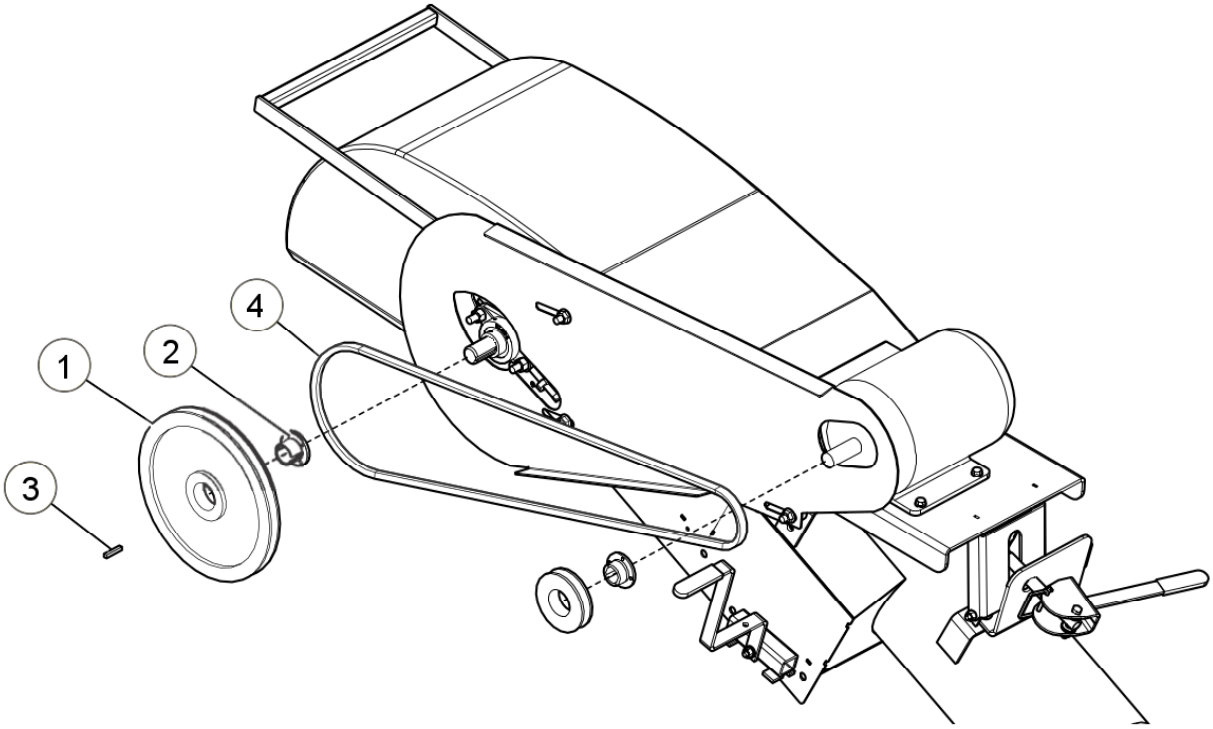

Figure 42. Installing the Pulley Guard

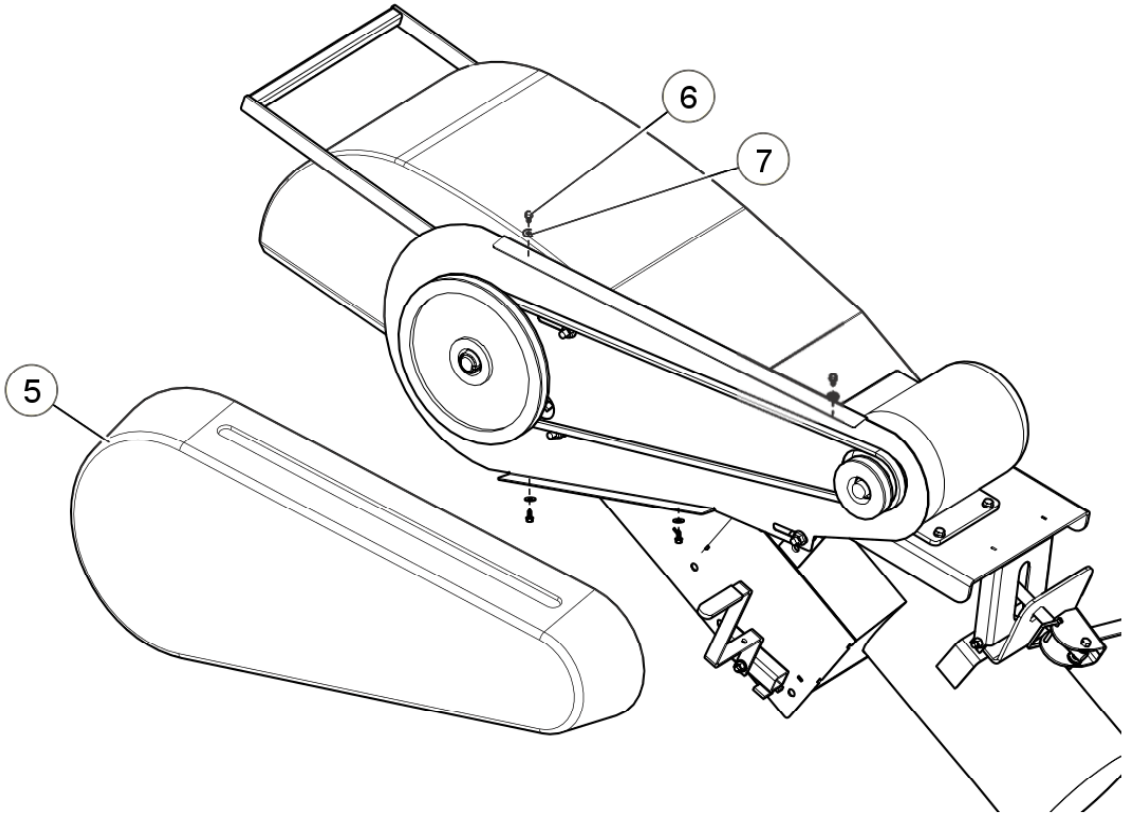

3.18.2 Install the Hydraulic Drive

Install the Motor Mount and Sprocket/Chain Assembly

1. Remove the 1/2" locknuts (2) from the drive roller flange bearing (7) (see Figure 43).

   Note

   These bolts will be used to fasten the motor mount (1) to the conveyor.

2. Install the square key (4) into the drive roller shaft.
3. Loosely fasten the motor mount (1) to the drive roller flange bolts using the nuts removed in step 1.
4. Install the sprocket and chain assembly:
   a. Assemble the 1" bore sprockets (3, 6) and chain (5) with the connector link.
   b. Slide the sprocket and chain assembly onto the drive roller shaft.

Table 18. Mount and Sprocket Components

Item	Description
1	Motor Mount
2	1/2" Nylon Locknut (removed from bearing)
3	1" Bore Sprocket (5014 Half Thick)
4	1/4" x 1-1/2" Key
5	Chain Coupling (5014)
6	1-1/4" Bore Sprocket (5014 Half Thick)
7	Drive Roller Flange Bearing

Figure 43. Installing the Motor Mount and Sprocket/Chain Assembly

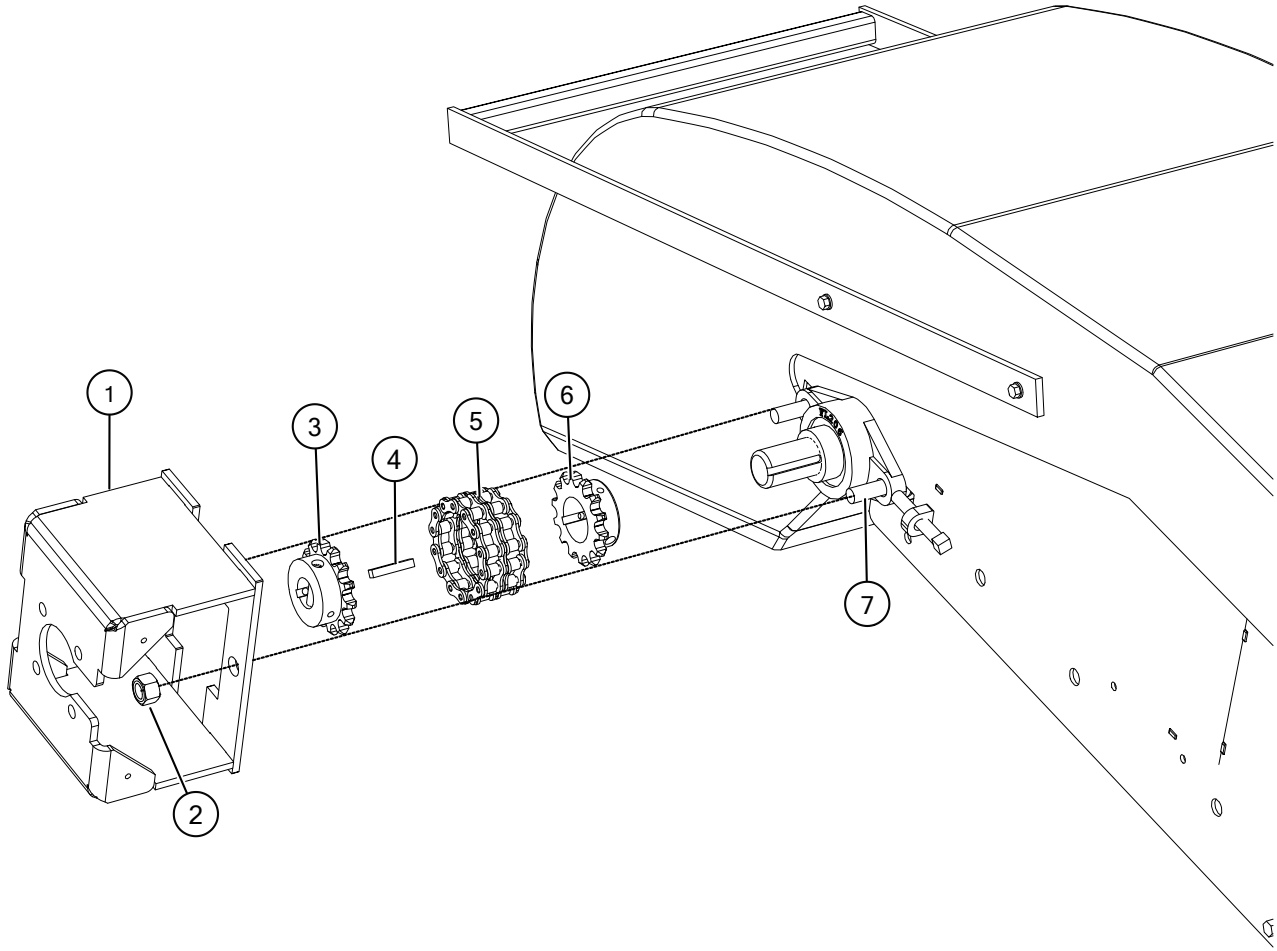

Install the Hydraulic Motor

1. Slide the drive shaft of the hydraulic motor (1) into the sprocket and chain assembly (see Figure 44).
2. Secure the motor to the sprocket and chain assembly with the 3/8" x 2" spring pin (2).
3. Loosely fasten the motor onto the motor mount using 3/8" x 3/4" bolts (3).
4. Tighten fasteners in sequence starting with the bolts connecting the motor mount to the bearing, followed by the bolts connecting the motor to the motor mount, and finally the set screws on the sprockets.

Table 19. Hydraulic Motor Components

Item	Description
1	Hydraulic Motor
2	3/8" x 2" Spring Pin
3	3/8" x 3/4" Hex Bolt

Figure 44. Installing the Hydraulic Motor

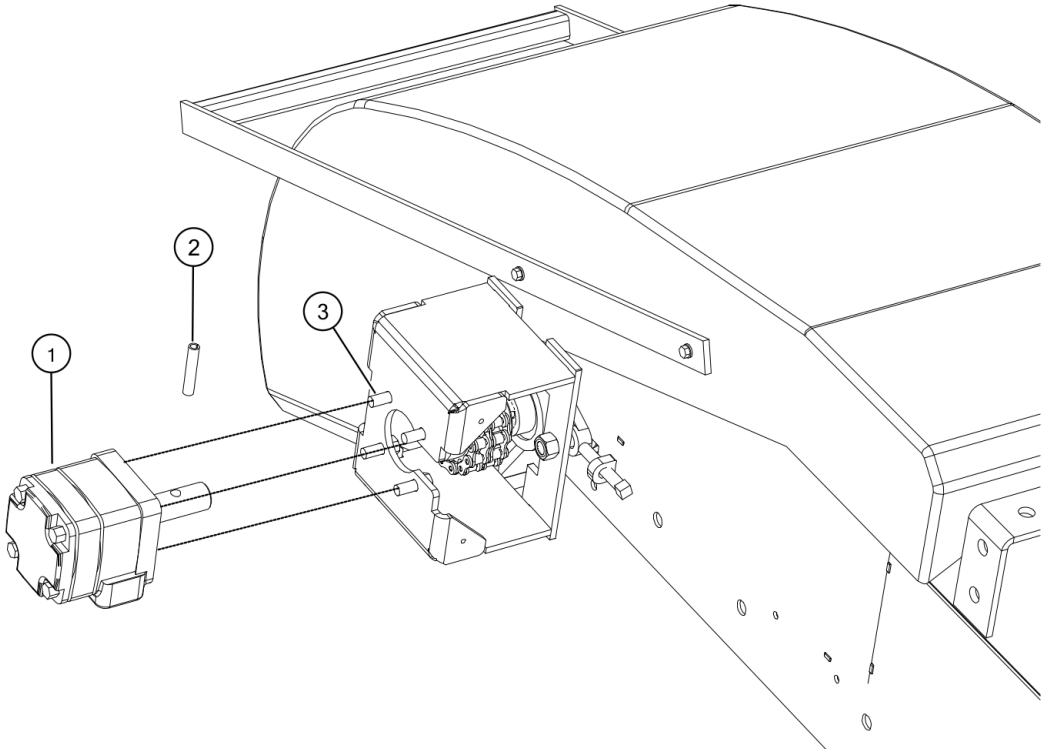

Install the Hydraulic Fittings and Coupler Guard

1. Insert the speed control valve (5) into the hydraulic motor (see Figure 45).
2. Insert the 3/8" 90° swivel (4) into the spout side of the speed control valve.
3. Insert the 1/2" x 3/8" nipple (6) into the hopper side of the speed control valve.
4. Insert the 1/2" check valve (7) into the 1/2" x 3/8" nipple (6).
5. Insert a 1/2" 90° swivel (8) into the return line of the 1/2" check valve.
6. Install the coupler guard (3) using 1/4" self-tapping screws (1) and 1/4" flat washers (2).
7. Install the shaft guard (see Section 3.19. – Install the Shaft Guard on page 64 for instructions).
8. Place the safety decal above the hydraulic motor assembly as indicated in 1.9.2 Safety Decal Locations and Details on page 9.
9. Attach and secure hydraulic hoses to the motor.

Table 20. Hydraulic Fittings and Coupler Guard Components

Item	Description
1	1/4" Self-tapping Screw
2	1/4" Flat Washer
3	1-1/4" Hydraulic Motor Guard 4.5 x 6.25
4	Swivel 90 - 3/8" MPT x 1/2" FPT
5	Speed Control Valve

Table 20 Hydraulic Fittings and Coupler Guard Components (continued)

Item	Description
6	1/2" x 3/8" Hex Nipple (S1022DC)
7	1/2" Check Valve (No Rev Flow)
8	Swivel 90 - 1/2" MPT x 1/2" FPT

Figure 45. Installing the Hydraulic Fittings and Coupler Guard

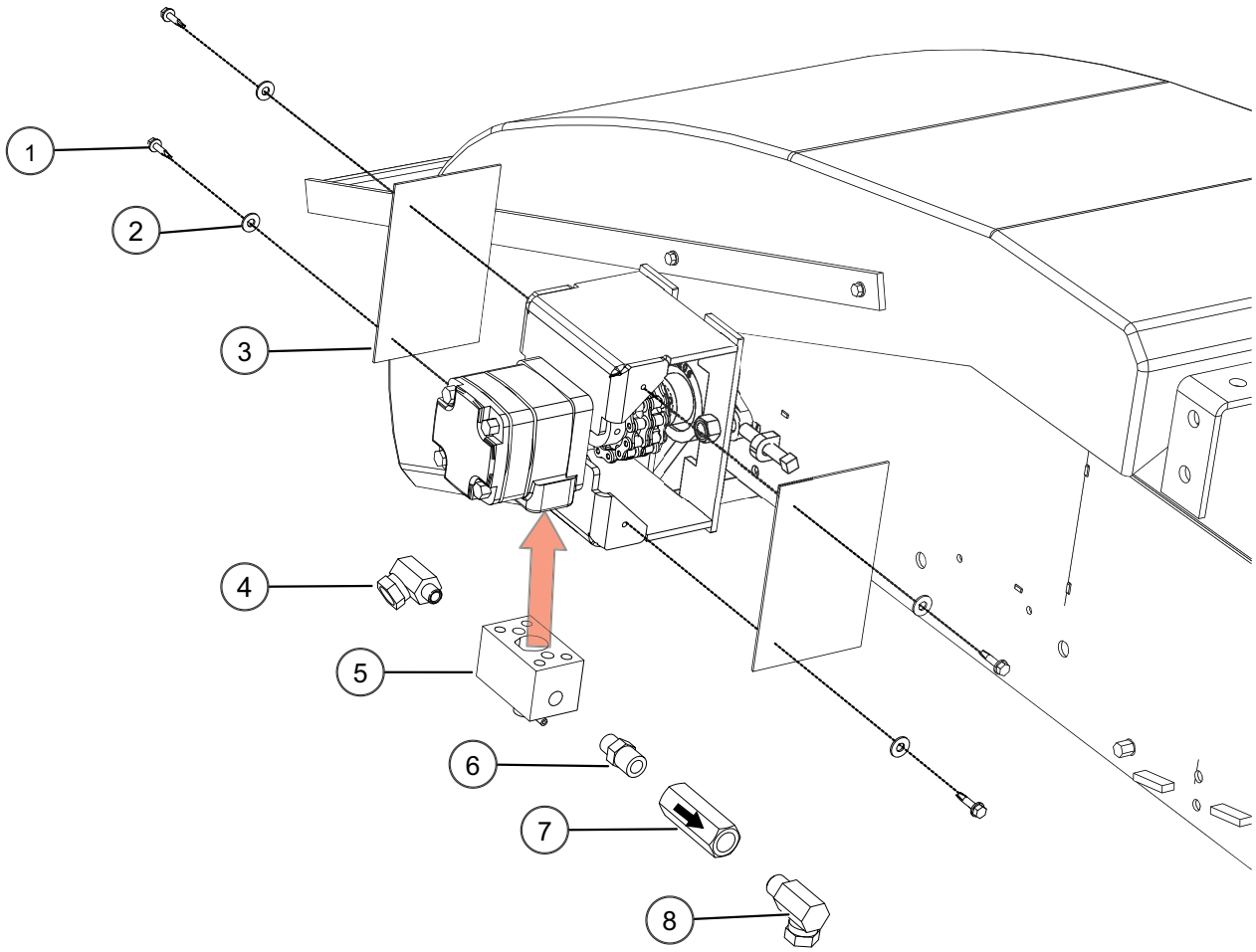

3.18.3 Install the Gas Drive

Note

The gas engine, drive pulley, and drive hub are not supplied with this option.

Install the Motor Mount Base

1. Attach the mount angle (1) to the tube bracket using 1/2" x 1-1/4" bolts (3) and 1/2" locknuts (4).
2. Attach the angle bracket (2) to the spout bracket using 1/2" x 1-1/4" bolts (3) and 1/2" locknuts (4).
3. Insert a slide bushing (5) into the slot on each side of the motor mount (6). Position the motor mount on top of the angle bracket (2). Secure in place using 3/8" x 15" bolt (7), 3/8" flat washer (8), and 3/8" locknut (9).
4. Attach the mount angle plate (10) to the tube bracket using 3/8" x 1" bolts (11) and 3/8" locknuts (12).
5. Fasten the mount angle plate (10) and motor mount (6) together using 3/8" x 1" bolts (11) and 3/8" locknuts (12).
6. Ensure the motor mount is level.
7. Tighten the bolts.

   Note

   Do not over-tighten the bolts attached to the motor angle plate (10), these joints must pivot.

Table 21. Motor Mount Base Components

Item	Description
1	Mount Angle
2	Transfer Angle Bracket
3	1/2" x 1-1/4" Whiz Bolt Gr5
4	1/2" Whiz Nut Gr5
5	Slide Bushing
6	Motor Mount
7	3/8" x 15" Bolt Gr8 Plated
8	3/8" Flat Washer USS Plated
9	3/8" Nylock Nut Gr8
10	Mount Angle Plate
11	3/8" x 1" Bolt Gr8 Plated
12	3/8" Nylock Nut

Figure 46. Installing the Mount Angle and Angle Bracket

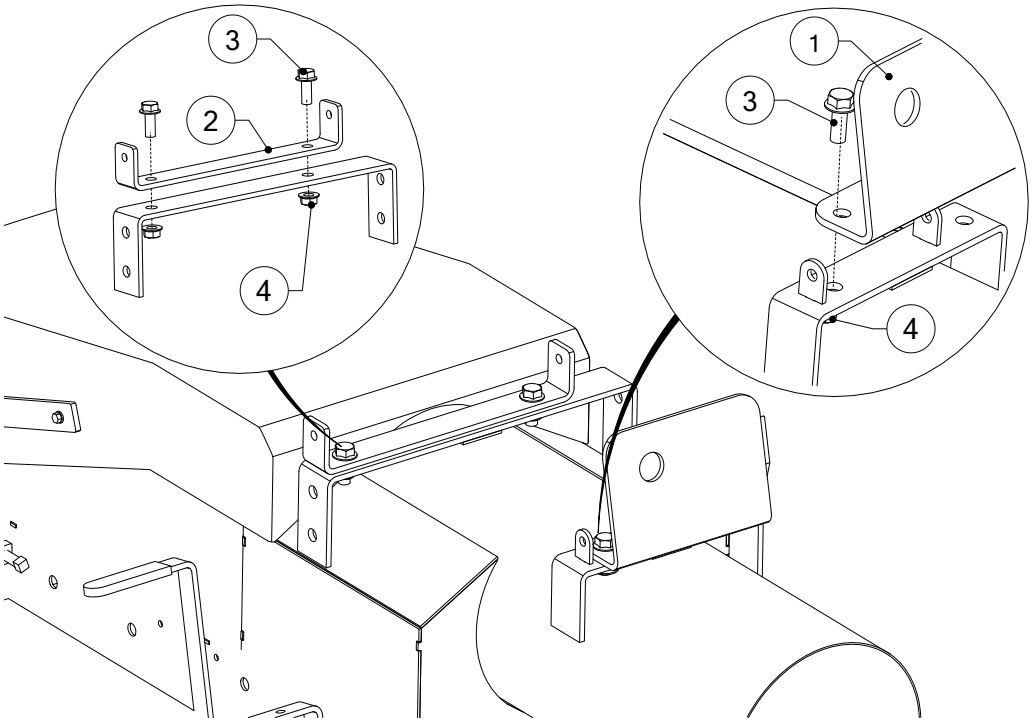

Figure 47. Installing the Motor Mount

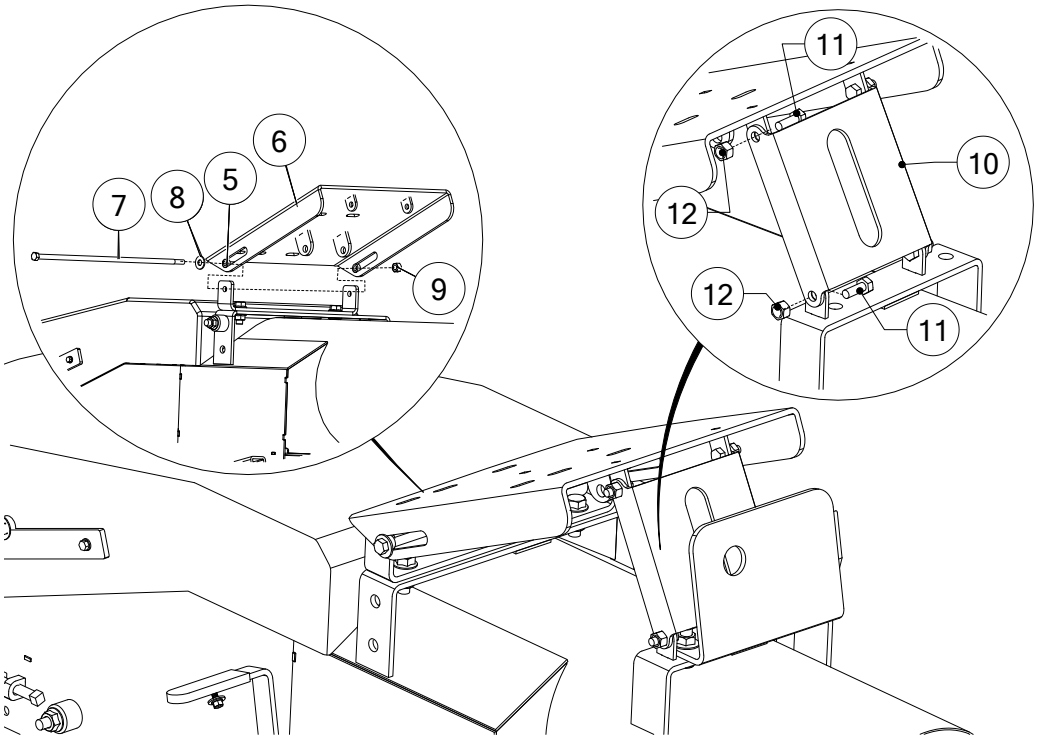

Install the Pivot Handle and Engine

1. Attach the pivot handle shaft (1) to pivot handle (2) using a 3/8" x 2-1/2" bolt (3), eight 3/8" washers (4), and a 3/8" locknut (5). Attach the 1/4" x 2-1/4" quick pin (6).
2. Insert the threaded end of the handle shaft into the mount angle hole and through the motor angle plate slot.
3. Thread a nut pivot (7) to the end of the handle shaft.
4. Fasten the nut pivot to the motor mount using 1/2" x 1-1/4" bolts (8) and 1/2" nuts (9).
5. Place the gas engine (12) on motor mount and fasten with 3/8" x 1-1/2" bolts (10) and 3/8" locknuts (11). Ensure that the gas engine shaft is parallel to spout roller. Leave bolts finger-tight.
6. Fill the engine with oil to the correct level.

Table 22. Pivot Handle and Motor Components

Item	Description
1	Pivot Handle Shaft
2	Pivot Handle
3	3/8" x 2-1/2" Hex Bolt Gr8 Plated
4	3/8" Flat Washer USS Plated
5	3/8" Nylock Nut Gr8
6	1/4" x 2-1/4" Quick Pin
7	Nut Pivot
8	1/2" x 1-1/4" Hex Bolt Gr8 Plated
9	1/2" Nylock Nut
10	3/8" x 1-1/2" Whiz Bolt Gr5
11	3/8" Whiz Nut Gr5
12	9 Hp Honda Engine

Figure 48. Installing the Pivot Handle

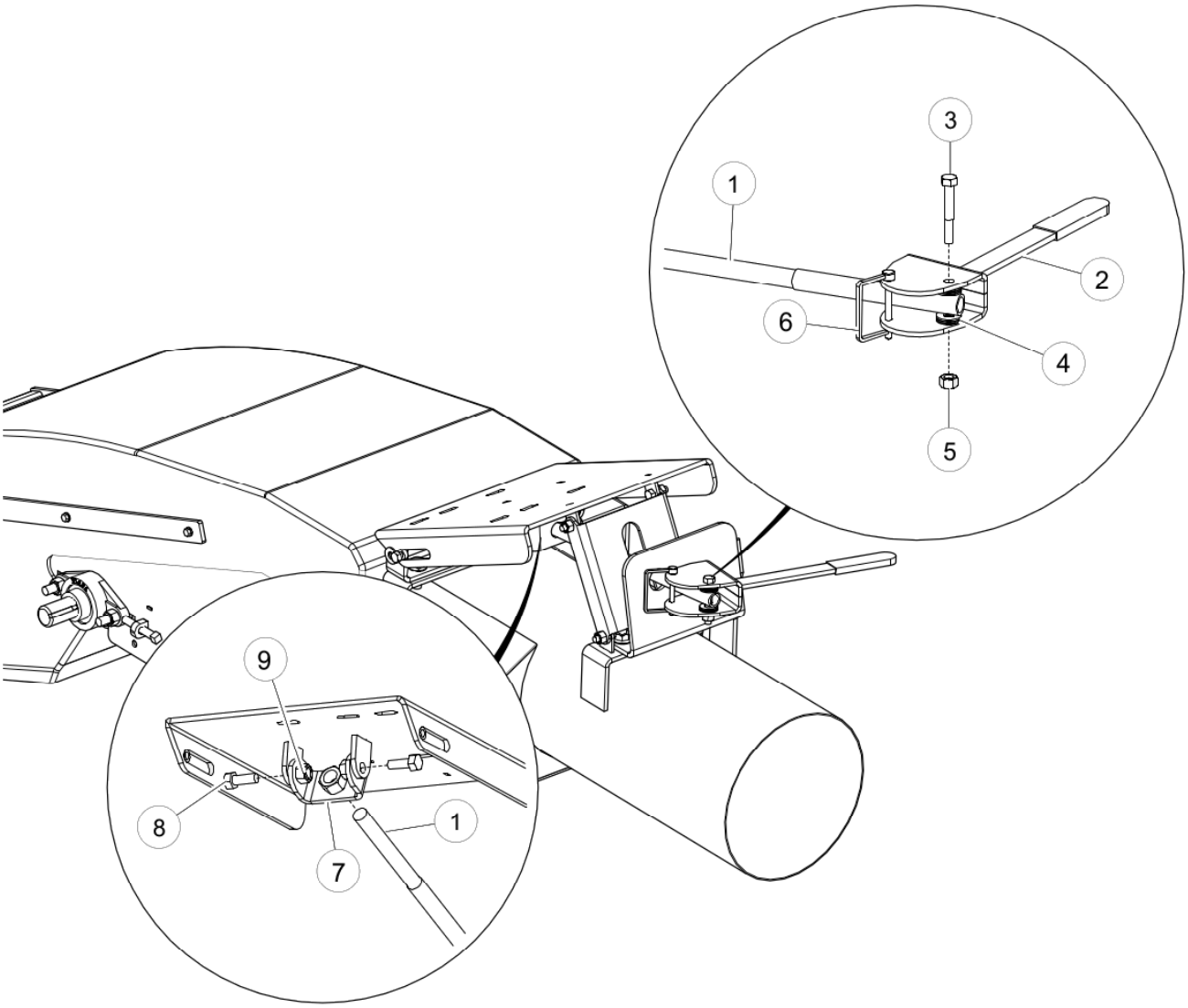

Figure 49. Installing the Engine

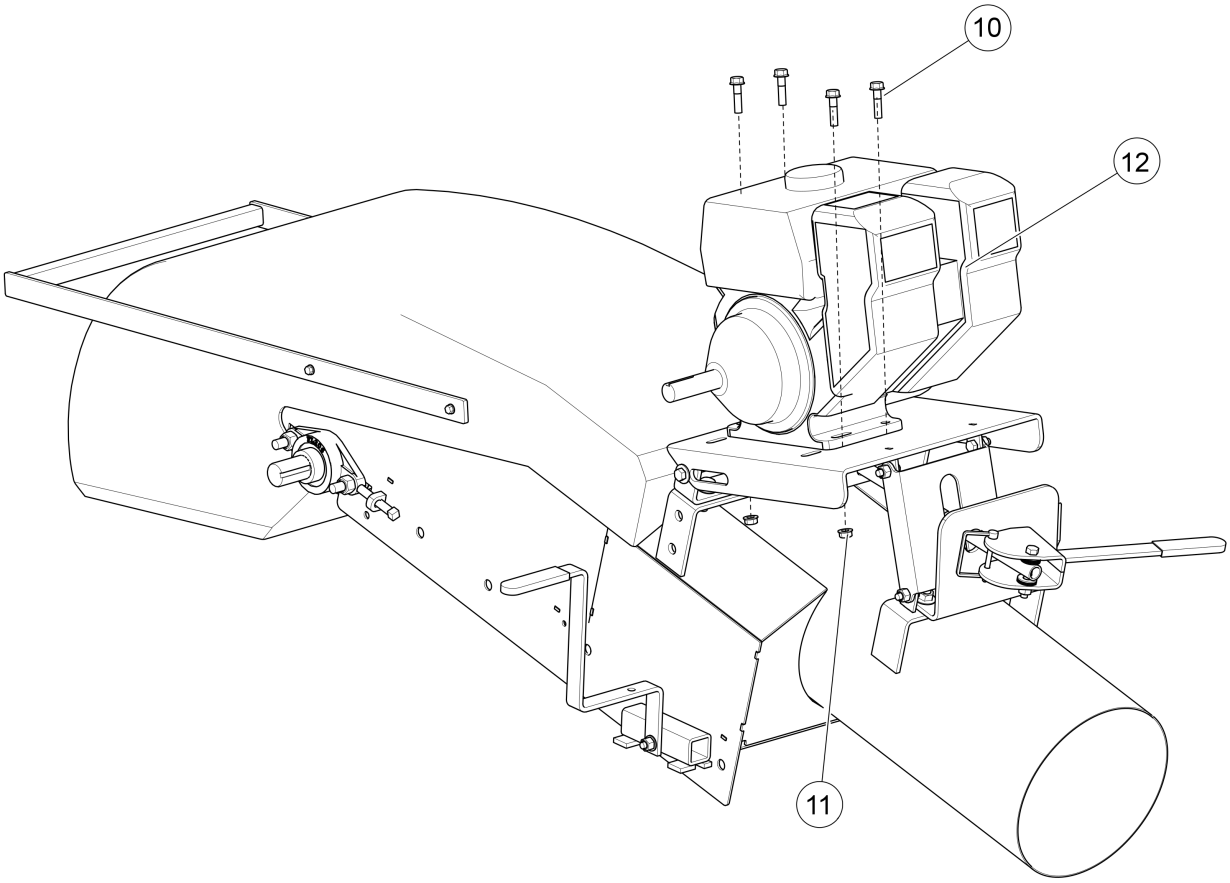

Install the Guard Back Plate

1. Hold the guard back plate (1) in position. Mark and drill a hole in the spout cover to install 3/8" x 2" hex bolt (2). See Figure 50.
2. Insert two 1/2" x 2" whiz bolts (3), one on the spout cover and one on the spout bracket.
3. Attach an idler spacer (4) to each 1/2" x 2" whiz bolt (3).
4. Attach a 1/2" pipe (5) to the 3/8" x 2" hex bolt (2).
5. Place the guard back plate (1). Secure the 3/8" x 2" hex bolt (2) with a 3/8" flat washer (6) and a 3/8" locknut (7). Secure the 1/2" x 2" whiz bolts (3) with 1/2" whiz nuts (8).

Table 23. Guard Back Plate Components

Item	Description
1	Guard Back Plate
2	3/8" x 2" Hex Bolt GR5
3	1/2" x 2" Whiz Bolt GR8
4	Idler Spacer
5	1/2" Pipe-Sch80 (3/4")

Table 23 Guard Back Plate Components (continued)

Item	Description
6	3/8" Flat Washer USS Plated
7	3/8" Nylock Nut
8	1/2" Whiz Nut GR5

Figure 50. Installing the Guard Back Plate

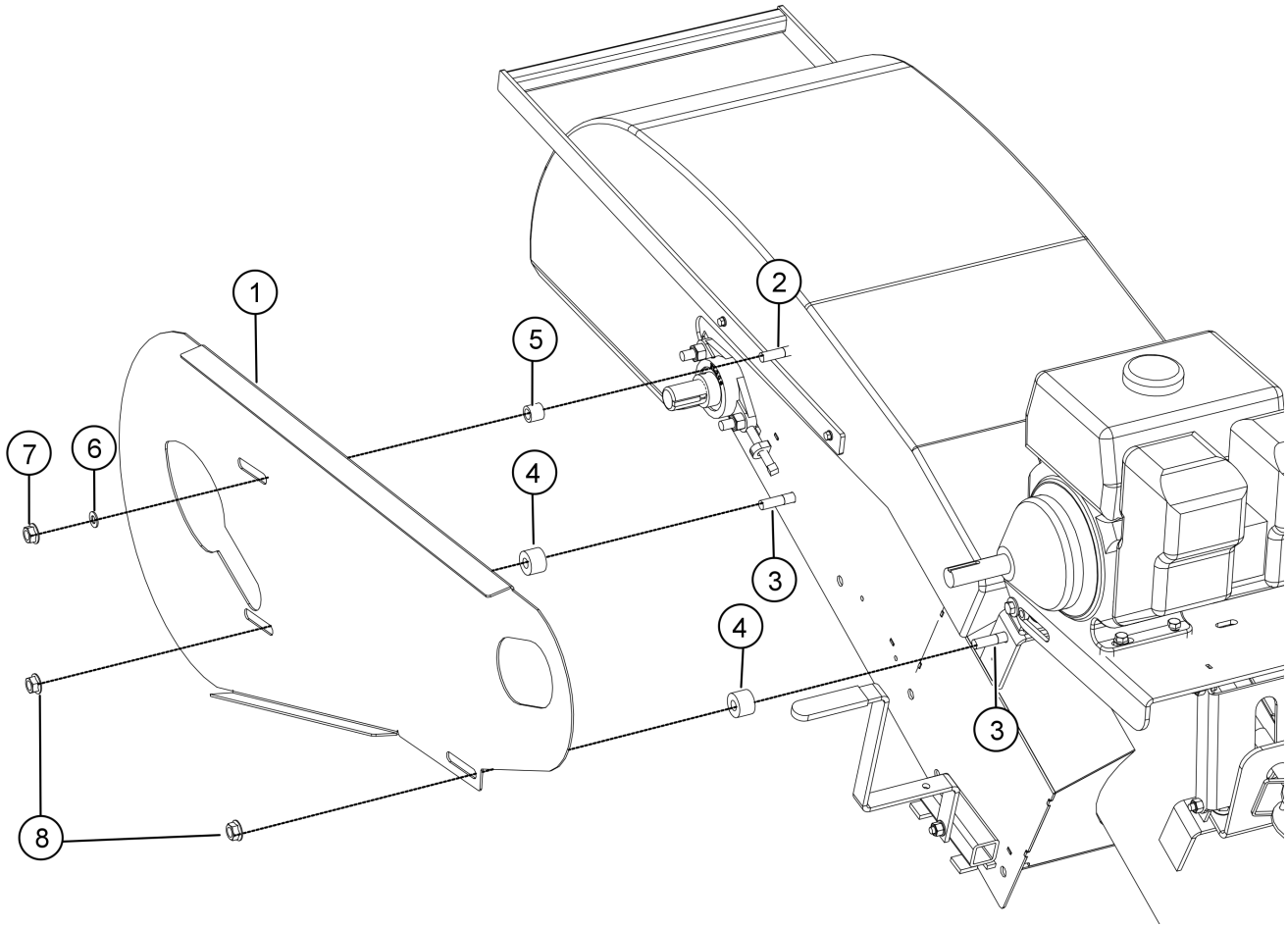

Install the Pulley, Belt, and Pulley Guard

1. Mount the drive pulley (1a) so the bushing (2) is flush with the end of the shaft. Insert 1/4"x 1-1/2" key (4) in the gas engine shaft. Do not tighten pulley screw until belt is aligned.
2. Mount the driven pulley (1b) so the hub (3) is flush with the end of the shaft. Insert 1/4"x 1-1/2" key (4) to the spout roller shafts. Do not tighten pulley screw until belt is aligned.
3. Use a straight-edge to align the pulleys. Tighten motor base bolts and tighten the pulley screws.

   Important

   Once all bolts and screws are tightened, re-check alignment. Proper alignment will prolong belt life.

4. Place the belts (5) on pulleys. Set tension by adjusting the pivot handle shaft.

Note

Belts should deflect 1/2" (1.27 cm) to 3/4" (1.91 cm) when pushed on with a 5 lb (22.2 N) force.

5. Verify the appropriate safety decals are in place on and under the pulley guard (6).

Note

See the decal location diagram in the Safety Chapter.

6. Hold the pulley guard (6) over the belt and secure to the guard back plate using 1/4" x 1" self-tapping screws (7) and 1/4" flat washers (8).
7. Install the shaft guard. See Section 3.19. – Install the Shaft Guard on page 64.

Table 24. Pulley, Belt, and Pulley Guard Components

Item	Description
1a, 1b	6" Pulley — Double
2	1" Hub H
3	1-1/4" Hub H
4	1/4"x 1-1/2" Key
5	Belt B87
6	Pulley Guard-46.5"L -7" to 16"
7	1/4" x 1" Tek Screw
8	1/4" Flat Washer USS Plated

Figure 51. Installing the Pulley and Belt

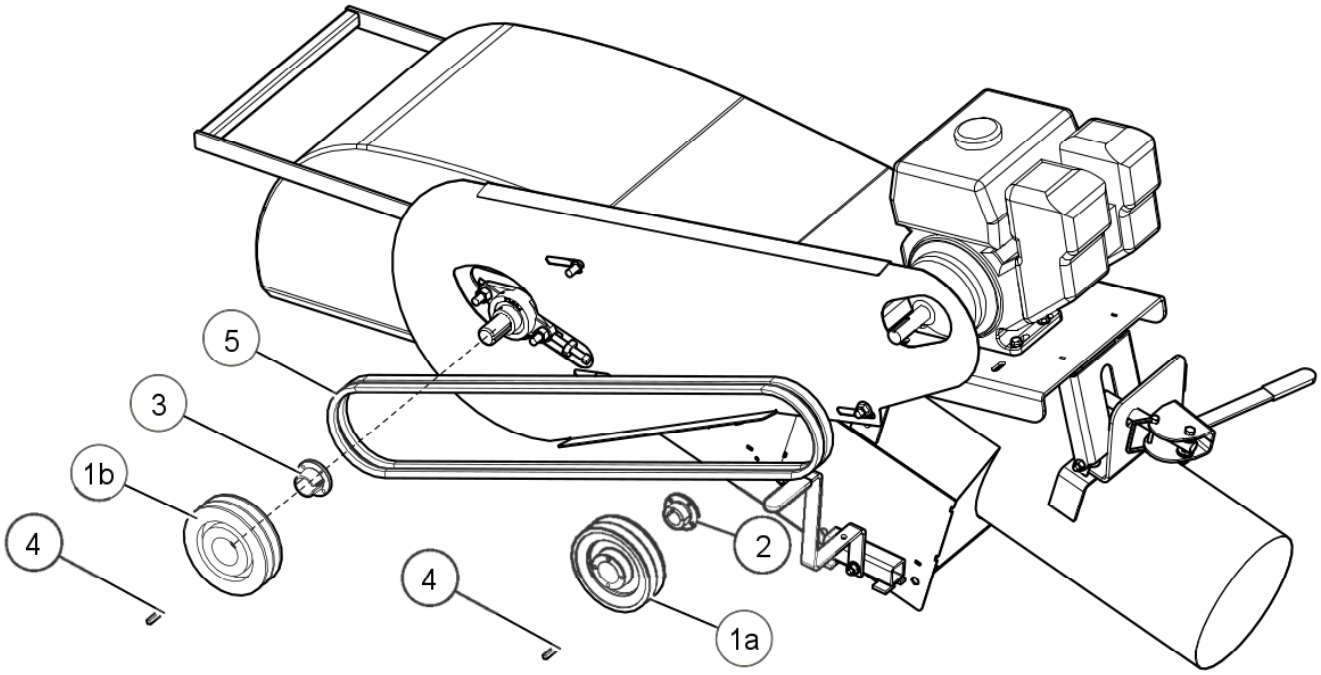

Figure 52. Installing the Pulley Guard

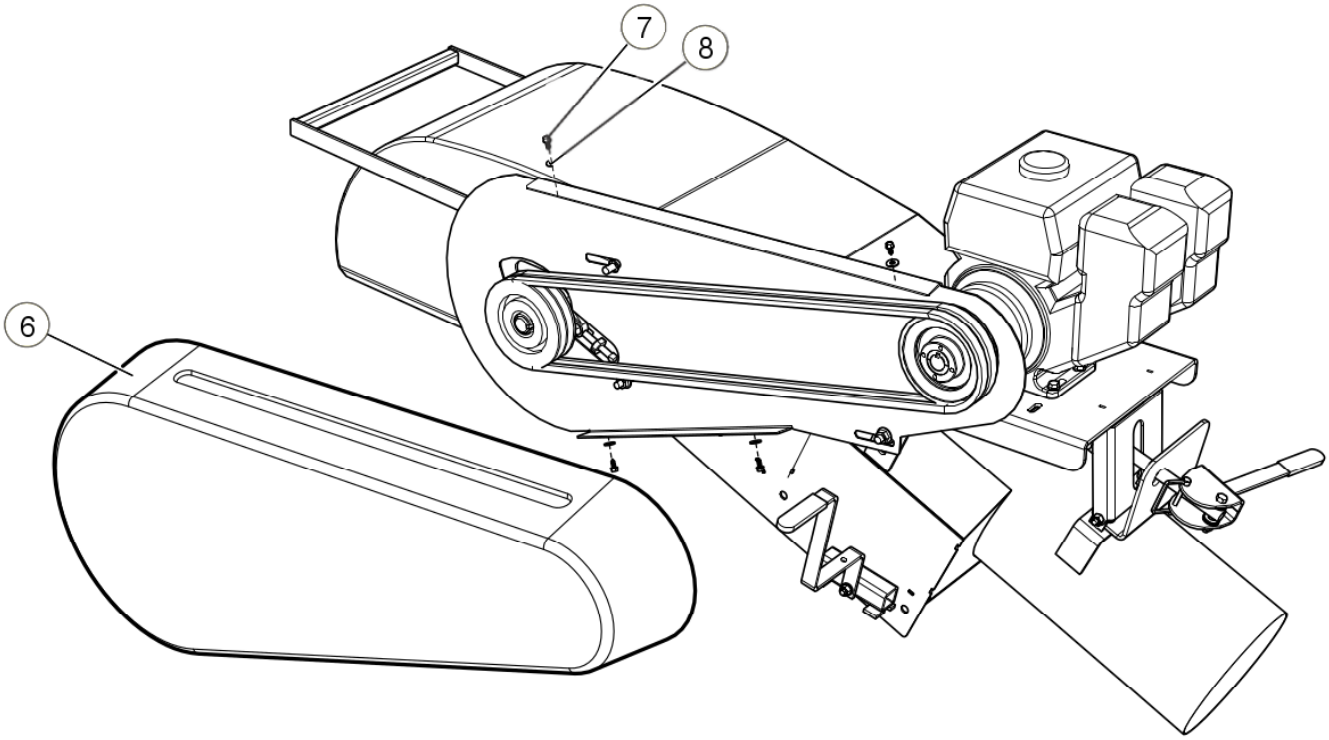

3.19. Install the Shaft Guard

1. Mount the shaft guard (2) over the roller shaft and onto the flange bearing carriage bolts (see Figure 53).
2. Secure the shaft guard in place using two locknuts (3) and two flat washers (4).

Note

When mounting onto a 15/16" bearing (FL210), use 5/8" locknuts and flat washers.
When mounting onto a 1-1/4" bearing (FL206) or 1-1/2" bearing (FL208), use ½" locknuts and flat washers.

Figure 53. Installing Shaft Guard

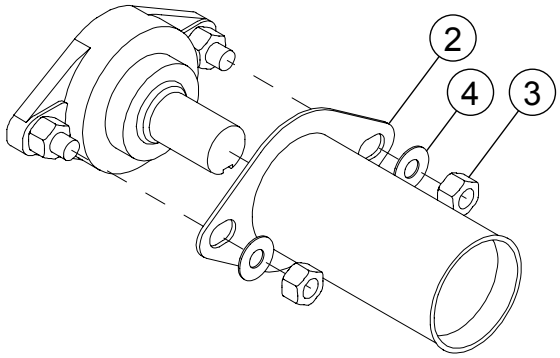

3.20. Install the Manual Container

1. Position the manual container on the hopper pivot shaft (see Figure 54).
2. Secure with two zip ties.

Figure 54. Manual Container

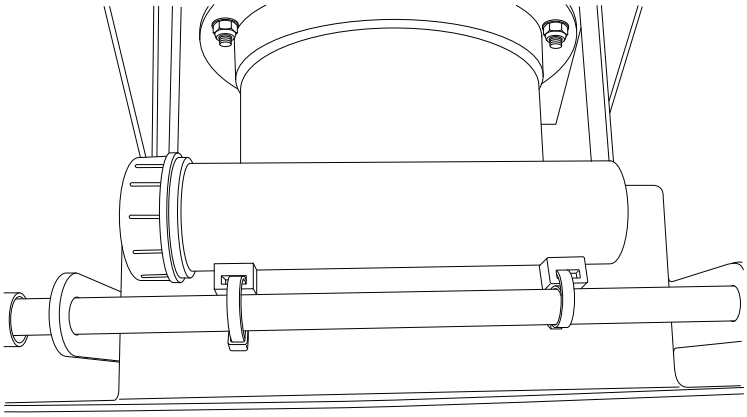

4. Specifications

Table 25. Transfer Belt Conveyor

Description	1515
Length	17'9" (5410 mm)
Width	2'6" (762 mm)
Height	4'6" (1372 mm)
Clearance	12" (305 mm)
Weight	730 lb (331 kg)
POWER OPTIONS	
Hydraulic Drive	5.9 cu. in.
Gas Engine	9 hp w/ 6:1 gear reduction
Electric Motor	5 hp

5. Appendix

5.1. Bolt Torque

Table 26 gives the correct torque values for various hardware. Tighten all bolts to the torque specified, unless otherwise noted. Check tightness periodically, using Table 26 as a guide. Replace the hardware with the same strength bolt, contact Batco if you are unsure.

Table 26. Recommended Bolt Torque[a]

Size	Dry or Lubricated	Threads per inch (Course/ Fine)	Area of Bolt (sq in.)		Recommended Torque (ft-lb)							
					Grade 2		Grade 5		Grade 8		8.8 S/S	
			Coarse	Fine	Coarse	Fine	Coarse	Fine	Coarse	Fine	Coarse	Fine
1/4"	Dry	20/28	0.0318	0.0364	5.5	6.3	8	10	12	14	6.3	7.8
	Lubricated				6.3	4.7	6.3	7.2	9	10	-	-
5/16"	Dry	18/24	0.0524	0.058	11	12	17	19	24	27	11	11.8
	Lubricated				8	9	13	14	18	20	-	-
3/8"	Dry	16/24	0.0775	0.0878	20	23	30	35	45	50	20	22
	Lubricated				15	17	23	25	35	35	-	-
7/16"	Dry	14/20	0.1063	0.1187	32	36	50	55	70	80	31	33
	Lubricated				24	27	35	40	50	80	-	-
1/2"	Dry	13/20	0.1419	0.1599	50	55	75	85	110	120	43	45
	Lubricated				35	40	55	65	80	90	-	-
9/16"	Dry	12/18	0.182	0.203	70	80	110	120	150	170	57	63
	Lubricated				55	60	80	90	110	130	-	-
5/8"	Dry	11/18	0.226	0.256	100	110	150	170	210	240	93	104
	Lubricated				75	85	110	130	160	180	-	-
3/4"	Dry	10/16	0.334	0.373	175	200	260	300	380	420	128	124
	Lubricated				130	140	200	220	280	310	-	-
7/8"	Dry	9/14	0.462	0.508	170	180	430	470	600	670	194	193
	Lubricated				125	140	320	350	180	180	-	-
1"	Dry	8/14	0.606	0.679	250	280	640	720	910	1020	287	289
	Lubricated				190	210	480	540	680	760	-	-
1-1/8"	Dry	7/12	0.763	0.856	350	400	790	890	1290	1440	288	290
	Lubricated				270	300	590	670	970	1080	-	-
1-1/4"	Dry	7/12	0.989	1.073	500	550	1120	1240	1820	2010	289	291
	Lubricated				380	420	840	930	1360	1510	-	-
1-1/2"	Dry	6/12	1.405	1.581	870	960	1950	2200	3160	3560	-	-
	Lubricated				650	730	1460	1640	2370	2670	-	-

[a]Torque value for bolts and cap screws are identified by their head markings. Established at 75% of yield strength of bolt given the cross-sectional area.

Note

Torque figures in table are valid for non-greased or non-oiled threads and head unless otherwise specified. Therefore, do not grease or oil bolts or cap screws unless otherwise specified in this manual. When using locking elements, increase torque values by 5%.

5.2. Fittings Torque Values

These specifications are for carbon steel. With Zinc plating always lubricate threads and seals. For stainless steel, use the high value of the torque range of steel. For brass, use 70% of the torque value of steel. For mixed metals, use the torque of the lower of the two metals. Torque range is normally calculated +/- 10%.

Table 27. Pipe Rigid - Tapered Pipe Threads (NPTF, N/NF) - Carbon Steel

Pipe Size	Turns-from-finger	Max ft-lbs	Max N-m
1/8" (-2)	3/4 - 1 3/4	12	16
1/4" (-4)	3/4 - 1 3/4	25	34
3/8" (-6)	3/4 - 1 3/4	40	54
1/2" (-8)	1/2 - 1 1/2	54	73
3/4" (-12)	1/2 - 1 1/2	78	106
1" (-16)	1/2 - 1 1/2	112	152
1 1/4" (-20)	1/2 - 1 1/2	154	209
1 1/2" (-24)	1/2 - 1 1/2	211	286
2" (-32)	1/2 - 1 1/2	300	407

Table 28. Pipe Swivel - Straight Pipe Threads (NPSM, N/NFS) - Carbon Steel

Pipe Size	Max ft-lbs	Max N-m
1/8" (-2)	12	16
1/4" (-4)	25	3
3/8" (-6)	40	54
1/2" (-8)	54	73
3/4" (-12)	78	106
1" (-16)	112	152
1 1/4" (-20)	154	209
1 1/2" (-24)	211	286
2" (-32)	300	407
Note: seals on an internal male 30° seat		

Table 29. Stud End O-Ring Boss (ORB) SAE (U/UF)

		Carbon Steel	
Tube Size	**Thread UNF-2A**	**Max ft-lbs**	**Max N-m**
-2	5/16" - 24	6-7	8-9
-3	3/8" - 24	8-9	11-12
-4	7/16" - 20	13-15	18-20

Table 29 Stud End O-Ring Boss (ORB) SAE (U/UF) (continued)

		Carbon Steel	
Tube Size	**Thread UNF-2A**	**Max ft-lbs**	**Max N-m**
-5	1/2" - 20	17-19	23-26
-6	9/16" - 18	22-24	29-33
-8	3/4" - 16	40-43	49-53
-10	7/8" - 14	43-48	59-64
-12	1 1'16" - 12	68-75	93-102
-14	1 3/16" - 12	90-99	122-134
-16	1 5/16" - 12	112-123	151-166
-20	1 5/8" - 12	146-161	198-218
-24	1 7/8" - 12	154-170	209-231

Table 30. JIC 37° Flare Tube Fitting (J/JFS)

Tube Size	Thread UNF-2A	Torque ft-lbs	Torque N-m
-2	5/16 - 24	6-7	8-9
-3	3/8 - 24	8-9	11-12
-4	7/16 - 20	11-12	15-16
-5	1/2 - 20	14-15	19-21
-6	9/16 - 18	18-20	24-28
-8	3/4 - 16	36-39	49-53
-10	7/8 - 14	57-63	77-85
-12	1 1/16 - 12	79-88	107-119
-14	1 3/16 - 12	94-103	127-140
-16	1 5/16 - 12	108-113	147-154
-20	1 5/8 - 12	127-133	172-181
-24	1 7/8 - 12	158-167	215-226
-32	2 1/2 - 12	245-258	332-350

Batco | Westfield
201 Industrial Drive, Swift Current
Saskatchewan S9H 5R4, CANADA
Phone: (877) 667-7421 (Canada & USA)
or (306) 773-7779
Fax: (306) 778-2524
Email: info@batcomfg.com
Website: www.batcomfg.com

Hutchinson
514 W. Crawford Street
Clay Center, Kansas, 67432 USA
Phone: (800) 523-6993
or (785) 632-2161
Fax: (785) 632-5964
Email: sales@hutchinson-mayrath.com
Website: www.hutchinson-mayrath.com

Printed in Canada