AGI WESTEEL

Special New Zealand 902, 903, 1202 & 1203

Bulk Feed Tank
Installation and Storage Instructions

Original Instructions

Read this manual before using product. Failure to follow instructions and safety precautions can result in serious injury, death, or property damage. Keep manual for future reference.

Part Number: 240033 R8
Revised: November 2018

New in this Manual

The following changes have been made in this revision of the manual:

Description	Section
Updated Safety Decal Locations	2.6. Safety Decal Locations and Details on page 7
Updated 15' roof snow load.	Section 3.1. – Bin Design and Capacity on page 10

CONTENTS

1. Introduction 4

2. Safety 5
2.1. Safety Alert Symbol and Signal Words 5
2.2. General Product Safety 5
2.3. Personal Protective Equipment 5
2.4. Safety Decals 6
2.5. Decal Installation/Replacement 6
2.6. Safety Decal Locations and Details 7

3. Before You Begin 10
3.1. Bin Design and Capacity 10
3.2. Foundation Design and Loads 10
3.3. Site and Assembly 10
3.4. Methods of Installation 11
3.5. Critical Assembly Requirements 11
3.6. Product Storage 12
3.7. Grain Bin Use 13
3.8. Important Notes 13

4. Preparation 15
4.1. Check Shipment 15
4.2. List of Tools and Equipment 15
4.3. Order Optional Equipment 15

5. Assembly 16
5.1. Assembly Safety 16
5.2. Timing Considerations 17
5.3. Assembly Process and Methods 17
5.4. Assemble the Top Tier 17
5.5. Roof Assembly 18
5.5.1 Roof Assembly - 9' Bin (902H60 and 903H60) 18
5.5.2 Roof Assembly - 12' Bin (1202H60 and 1203H60) 19
5.6. Wall Sheet Assembly Detail 21
5.7. Wall Sheet Layouts 22
5.8. Leg Assembly Detail 22
5.9. Hopper Sheet Assembly 27
5.10. Brace Detail 29
5.11. Bolt On Ladders, Cages and Pass-Through Rails 31
5.12. Position on Foundation and Anchor 32

6. Appendix 33
6.1. Parts List 33
6.2. BFT Part Identification 35
6.3. Hardware Usage 37
6.4. Recommended Bolt Assembly 39

7. Limited Warranty: Westeel Grain Bin Products 40

1. Introduction

This manual describes how to assemble a Westeel Special New Zealand 902, 903, 1202 & 1203.

Before assembling the feed tank, please read this manual. Familiarize yourself with the process and the necessary precautions for efficient and safe assembly.

Everyone present at the assembly site is required to be familiar with all safety precautions.

Keep this manual available for frequent reference and review it with new personnel. Call your local distributor or dealer if you need assistance or additional information.

2. Safety

2.1. Safety Alert Symbol and Signal Words

This safety alert symbol indicates important safety messages in this manual. When you see this symbol, be alert to the possibility of injury or death, carefully read the message that follows, and inform others.

Signal Words: Note the use of the signal words **DANGER**, **WARNING**, **CAUTION**, and **NOTICE** with the safety messages. The appropriate signal word for each message has been selected using the definitions below as a guideline.

DANGER Indicates an imminently hazardous situation that, if not avoided, will result in serious injury or death.

WARNING Indicates a hazardous situation that, if not avoided, could result in serious injury or death.

CAUTION Indicates a hazardous situation that, if not avoided, may result in minor or moderate injury.

NOTICE Indicates a potentially hazardous situation that, if not avoided, may result in property damage.

2.2. General Product Safety

YOU are responsible for the **SAFE** use and maintenance of your feed tank. **YOU** must ensure that you and anyone else who is going to work around the feed tank understands all procedures and related **SAFETY** information contained in this manual.

Remember, **YOU** are the key to safety. Good safety practices not only protect you, but also the people around you. Make these practices a working part of your safety program. All accidents can be avoided.

- It is the feed tank owner, operator, and maintenance personnel's responsibility to read and understand **ALL** safety instructions, safety decals, and manuals and follow them when operating, or maintaining the equipment.

- Owners must give instructions and review the information initially and annually with all personnel before allowing them to operate the feed tank. Untrained users/operators expose themselves and bystanders to possible serious injury or death.
- The feed tank is not intended to be used by children.
- Use the feed tank for its intended purposes only.
- Do not modify the feed tank in any way without written permission from the manufacturer. Unauthorized modification may impair the function and/or safety, and could affect the life of the feed tank. Any unauthorized modification will void the warranty.

2.3. Personal Protective Equipment

The following Personal Protective Equipment (PPE) should be worn when installing the equipment.

Safety Glasses

- Wear safety glasses at all times to protect eyes from debris.

Coveralls

- Wear coveralls to protect skin.

Hard Hat

- Wear a hard hat to help protect your head.

Steel-Toe Boots

- Wear steel-toe boots to protect feet from falling debris.

Work Gloves

- Wear work gloves to protect your hands from sharp and rough edges.

2.4. Safety Decals

- Keep safety decals clean and legible at all times.
- Replace safety decals that are missing or have become illegible. See decal location figures that follow.
- Replaced parts must display the same decal(s) as the original part.
- Replacement safety decals are available **free of charge** from your distributor, dealer, or factory as applicable.

2.5. Decal Installation/Replacement

1. Decal area must be clean and dry, with a temperature above 50°F (10°C).
2. Decide on the exact position before you remove the backing paper.
3. Align the decal over the specified area and carefully press the small portion with the exposed sticky backing in place.
4. Slowly peel back the remaining paper and carefully smooth the remaining portion of the decal in place.
5. Small air pockets can be pierced with a pin and smoothed out using the sign backing paper.

2.6. Safety Decal Locations and Details

Replicas of the safety decals that are attached to the feed tank and their messages are shown in the figure(s) that follow. Safe operation and use of the feed tank requires that you familiarize yourself with the various safety decals and the areas or particular functions that the decals apply to, as well as the safety precautions that must be taken to avoid serious injury, death, or damage.

Figure 1. Safety Decals

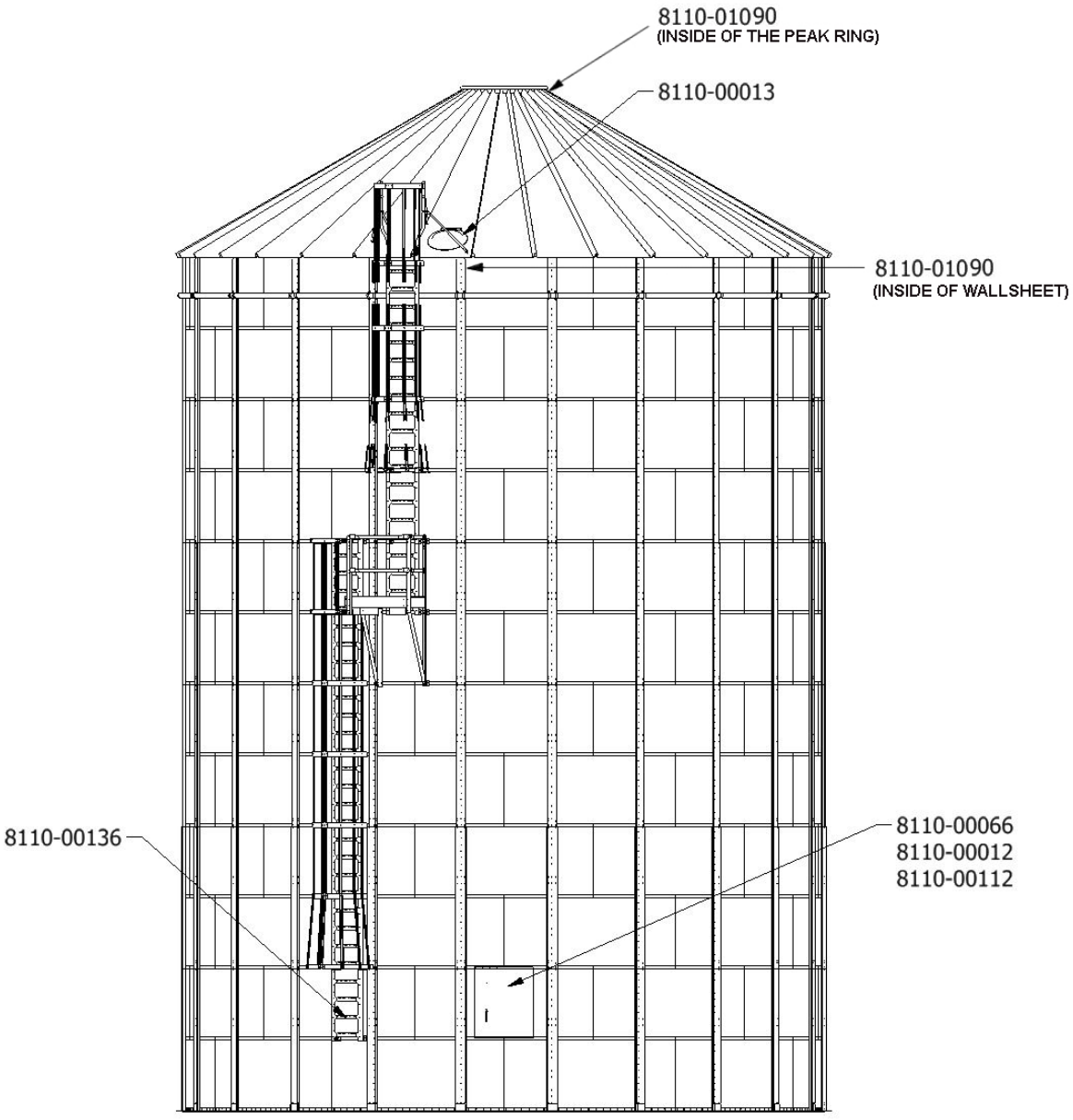

Part Number: 8110–00012

Part Number: 8110–00013

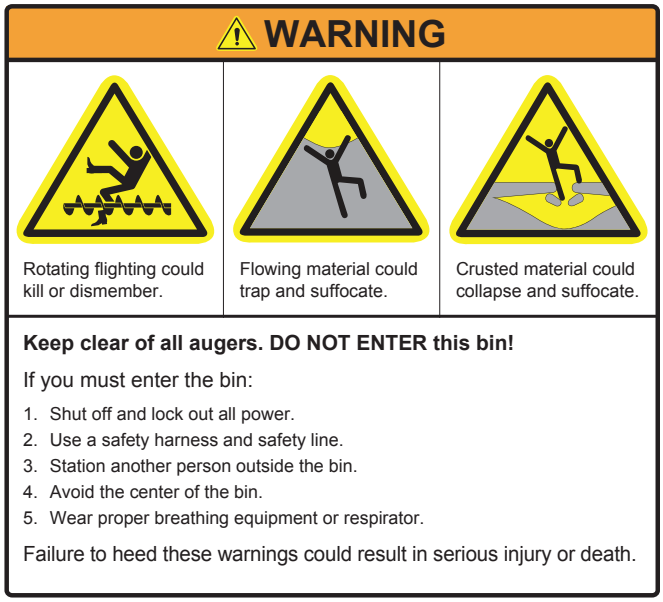

Part Number: 8110–00112

Part Number: 8110–00136

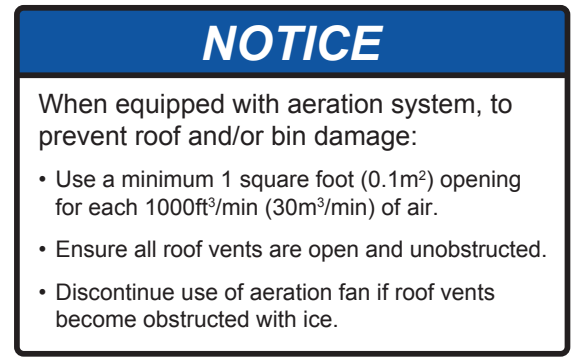

Part Number: 8110–00066

Part Number: 8110–01090

3. Before You Begin

3.1. Bin Design and Capacity

The New Zealand specific Bulk Feed Tanks within this manual are designed for:

1. Dry, free-flowing materials up to 40 lbs/ft^3 (640 kg/m^3) average compacted bulk density, as per Australian Standard AS 3774–1996: Loads on bulk solid container..
2. Structural design and environmental loadings as per the following standards:
    a. AS/NZ1170.0 — 2002
    b. AS/NZ1170.1 — 2002
    c. AS/NZ1170.2 — 2011
    d. AS/NZ1170.3 — 2003
    e. NZ1170.5 — 2004

Using the following design and environmental loading:

- Design life of 25 years, importance level 1
- Wind → design site wind speed of 61 m/s (Canterbury lee zone 1.35)
- Seismic → z = 0.42 (12 km from the major fault) Kaikoura, Soil Category D.
- Snow → Altitude of up to 750 m (open ground snow 3.3 kPa)

3.2. Foundation Design and Loads

Foundations designs for Westeel bulk feed tanks are based on 4000 lbs. per sq. ft. (192 kPa) soil bearing capacity. All foundation designs use 3000 lbs. per sq. in. (21 MPa) ultimate compressive strength (after 28 days) for concrete and 43,500 lbs. per sq. in. (300 MPa) re-bar. The foundation designs included in this manual are suggestions only, and will vary according to local soil conditions. Westeel will not assume any liability for results arising from their use.

Important

Foundation should be uniform and level. Level should not vary by more than ¼" over a span of four feet under the bottom ring angle. Any variance from level must be shimmed under upright base assembly. If being utilized to support a full floor aeration system, this levelness requirement should extend across the complete floor area.

3.3. Site and Assembly

Unless otherwise specifically provided in writing, Westeel does not take responsibility for any defects or damages to any property, or injury to any persons, arising from or related to any site or assembly considerations, including but not limited to:

- Bulk feed tank location and siting
- Soil conditions and corresponding foundation requirements (note that the examples provided in manuals are for specifically stated soil conditions)

- Bulk feed tank assembly (Westeel recommends the use of qualified installers; contact Westeel for information on installers in your area)
- Field modifications or equipment additions that affect the bulk feed tank structure
- Interconnections with neighboring structures
- Compliance with all applicable safety standards, including but not limited to fall restraint systems (ladders or other systems). Local safety authorities should be contacted as standards vary between jurisdictions.

3.4. Methods of Installation

The recommendations for assembling and installing Westeel bulk feed tanks must be closely followed to achieve the full strength of the bin and to achieve adequate weather sealing. The product warranty is void if:

1. Wall sheets and/or uprights not specified for a given tier are used.
2. Foundations are found to be inadequate or out-of-level.
3. Anchor bolts (cast-in-place, drill-in, chemical type or other) are found to be inadequate.
4. Off-center loading or unloading is used. (This does not apply to the use of approved side unloading systems.)
5. Materials stored in the bin are not free-flowing or have a compacted bulk density greater than 55 lbs/ft^3 (880 kg/m^3).

If using bin jacks during assembly, always lift on an upright. Choose a hoist with a adequate capacity for the expected empty bin deadload. Make sure the rated capacity of the hoist is not exceeded.

3.5. Critical Assembly Requirements

To ensure a successful, safe and reliable outcome you must comply with the following assembly techniques and practices:

1. Comply with all local code and jurisdictional requirements applicable to your feed tank installation.
2. Design and build foundations with the necessary strength for the loads they must support, and for local soil conditions. Westeel foundation guidelines are based on specific stated conditions and may not be applicable to local conditions.
3. Your foundation must provide uniform and level support to the structure being supported. Surface imperfections causing gapping must be remedied. This may involve, but not be limited to a) grouting under the bottom ring of a non-stiffened bin or tank, and b) shimming under the uprights of a stiffened bin or tank, or under the legs of a hopper.
4. Make sure that the proper hardware is utilized for all bolted connections. If a shortage occurs, do not substitute. Take the necessary steps to obtain the proper hardware. Make sure nuts are tightened to the required torque values as specified in the appropriate assembly manual.
5. Comply with all assembly instructions provided in the appropriate assembly manual to make sure your whole feed tank is constructed safely. **Important: Do not deviate from the wall sheet and upright layouts provided.**
6. Before anchoring your structure to its foundation, make sure the structure is round. The maximum variation from perfect roundness is 3/4" on the radius. Locate anchor bolts toward the outside of the anchor bolt holes (away from the circle) to permit the incremental expansion that can occur with the initial filling.
7. When installing roof stiffening rings, if it is necessary to shorten the stiffening ring tubes, shorten them as little as possible. Initially the nuts on the expanders should be centered and as close together as possible.

When tightening, share the amount of take-up between expanders such that the nuts remain centered, and the amount of engagement between all expanders on the same ring is equalized.

8. If extending an existing bin or tank, ensure that the foundation is adequate for the increased loads it must support.
9. If installing an existing bin on a hopper, make sure the bin is designed for a hopper application, and that the foundation is capable of withstanding the substantial point loads that the hopper legs apply. If uprights are present, make sure that they are supported.
10. Make sure that an integral end-to-end connection exists between all mating uprights. Successive uprights must not overlap.
11. Vertical tolerances between uprights and wall sheets are tight. This can be affected by “jacking” techniques, which can allow the tolerance to grow or shrink depending on the technique used. The gapping between successive uprights must be monitored to ensure that upright holes align with wall sheet holes.
12. If catwalks are being installed on the structure, upright catwalk upgrades are likely required. The upgraded stiffeners must be installed in the correct locations to support the intended catwalk loads. Also, the structure must be properly oriented to ensure the eventual correct alignment between the catwalks and the supporting uprights. Finally, the connectors that tie into the uprights and support the catwalks are best installed during assembly of the structure. See the catwalk assembly manual for additional details.

3.6. Product Storage

Rust on Galvanized Parts

1. White rust forms when moisture is allowed to collect on galvanized surfaces that have yet to develop the durable zinc oxide layer. This zinc oxide layer naturally occurs as the surface interacts with carbon dioxide, and is characterized over time by the dull grey appearance that weathered galvanized surfaces get.
2. Parts that are not well ventilated or well drained can collect water between surfaces and develop white rust.
3. White rust is not a structural concern if its development is stopped in the early stages. A light film or powdery residue can occur after a period of heavy rainfall or a short time of improper storage. If white rust has started to develop, separate parts and wipe off any moisture. Next, using a clean cloth, apply a thin layer of petroleum jelly or food-grade oil to the entire part.
4. If moisture is left on parts, this white rust can become more aggressive and turn into red rust. Red rust can cause degradation in the material and become a structural concern. Any parts that have red rust should be replaced immediately.

Storage Guidelines

- Keep all bundles dry before assembly of the bin.
- Start assembly as soon as possible.
- Do not lay bundles on the bare ground. Raise all bundles 6" to 8" off the ground on wood blocks or timbers. (See Detail A in Figure 2 on page 13.)
- Store curved wall sheets ‘hump-up’. (See Detail A in Figure 2 on page 13.)
- All other bundles material should be placed so that they are well sloped to promote good drainage. (See Detail B in Figure 2 on page 13.)
- Roof sheets must be elevated at least 12" at the small end of the sheets. (See Detail B in Figure 2 on page 13.)
- Temporary storage can be provided by erecting a simple framework supporting a waterproof tarp. (See Detail C in Figure 2 on page 13.)

- All bin boxes, ladder boxes and hardware boxes should be stored inside. These are not waterproof, and will deteriorate in normal weather conditions, allowing moisture to contact the parts inside.

Figure 2. Product Storage

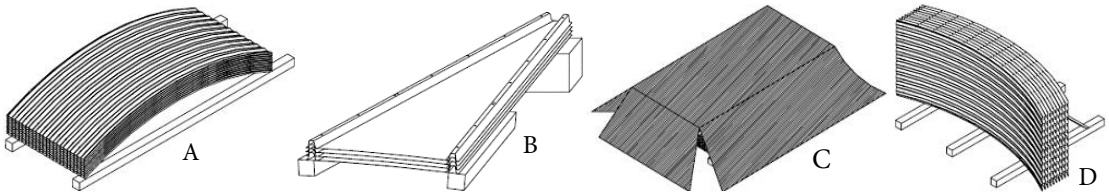

If Parts Become Wet

1. If parts become submerged or wet, the bundles should be opened as soon as possible, sheets or material separated and dried. Keep separated until assembly.

   Brace parts properly so as to avoid damage or injury from material falling when in storage. (See Detail D in Figure 2 on page 13.)

2. Any boxed parts that become wet should be dried and stored in a new box that is free of moisture.
3. In addition to wiping down wall sheets, a food-grade oil can also be applied with a clean, lint-free cloth. This will assist in preventing any further moisture from contacting the galvanizing on the steel. Due to safety concerns with installation and use, Westeel does not recommend the use of oil on other parts such as roof sheets and safety ladders.

3.7. Grain Bin Use

- Do not off-center unload a grain bin. It is imperative to unload from the center of the bin first, until as much grain as possible has been removed, and only then proceed to unload from the next closest unload gate to the center. Continue utilizing the unload gates in succession from the center towards the outside. Gate control mechanisms should be clearly marked and interconnected to prevent an external gate from being opened first.
- The only exception to center unloading is when a properly designed and installed side draw system is utilized. However, as bins tend to go out of round when employing side draws, the bin must be completely emptied before refilling.
- When unloading a bin with a mobile auger through a properly designed auger chute, the entry end of the auger should be pushed into the center of the bin before the auger is engaged. Slower rates of flow are preferable and should not exceed the capacity of an 8” auger.
- Ensure that the inner door panels of grain bin doors are completely closed and latched before filling the grain bin.
- Never enter a loaded grain bin for any reason. Grain can be a killer.

3.8. Important Notes

- Westeel does not provide a foundation design for this product, and is not liable for any damages or injuries related to inadequately designed or constructed foundations. Customers must contract professional services for all foundation design and construction work.
- In order to maintain your wall sheets in good condition separate sheets and allow air circulation between them. Store sheets in a dry place. Do not store sheets with sheet ends pointing upwards.

- To keep an even pressure on walls, the bin must always be unloaded from the centre.
- Contact local power officials for minimum power line clearance.
- See Section 3.5. – Critical Assembly Requirements on page 11 for mandatory siting and assembly requirements.
- Store only non-corrosive, free-flowing materials up to 55 lbs/ft^3 (800 kg/m^3) average compacted density in Westeel bins.
- Tighten all bolts to the recommended torque settings.
- Do not locate grain bins close to high buildings, which might cause snow to fall onto or build up on the roof of the grain bin. Consider future expansion and allow space for loading and unloading of the bin. Your dealer and local government agricultural consultants can help you plan your storage system for maximum efficiency.

4. Preparation

4.1. Check Shipment

Unload the parts at the assembly site and compare the packing slip to the shipment. Ensure that all items have arrived and that none are damaged.

Report damaged parts or shortages immediately to the delivering carrier, followed by a confirming letter requesting inspection by the carrier, if required. Order any replacement parts immediately to ensure that assembly will not be held up by missing parts. All parts will be charged for and credit will be issued by party at fault. No credit will be issued if freight bills are signed as received in good condition.

4.2. List of Tools and Equipment

Use quality tools and equipment. Use them safely, and correctly, for their intended use. Tools for this application should include:

Tools

- Electric or pneumatic (air) impact tools
- Power drill and drill bits
- Sockets (multiple 9/16" and 1/2" sockets recommended)
- Large-pocket carpenter pouch
- 8" (20 cm) metal punches (for aligning bolt holes)
- Step and extension ladders, construction grade
- 6-point wrenches (Imperial, box end)
- Metal-cutting saw suitable for cutting roof rings and wind rings
- Scaffolding
- Centre-post bin stand
- Crane and/or bin jacks

Minimum Recommended Safety Equipment

- A properly-stocked first-aid kit
- Eye, foot, head, and hand protection (safety glasses, steel-toed boots, hard hat, work gloves)
- Cable, chain, or rope to tie-off bin or jacks in case of wind
- Body harness and lifeline (for use where falling hazard exists)
- Ground fault interrupt protected electrical hook-ups

4.3. Order Optional Equipment

Optional equipment such as unloading augers, aeration equipment, anchor bolts, foundation sealant, external ladders, safety cage and platforms, etc., should all be on site and checked before assembly starts. Plan your installation in advance. For details, see assembly instruction supplied with optional equipment.

5. Assembly

Before continuing, ensure you have completely read and understood this manual's Safety section, in addition to the safety information in the section(s) below.

5.1. Assembly Safety

WARNING

- Do not take chances with safety. The components can be large, heavy, and hard to handle. Always use the proper tools, rated lifting equipment, and lifting points for the job.
- Carry out assembly in a large open area with a level surface.
- Always have two or more people assembling the feed tank.
- Make sure you have sufficient lighting for the work area.
- Tighten all fasteners according to their specifications. Do not replace or substitute bolts, nuts, or other hardware that is of lesser quality than the hardware supplied by the manufacturer.
- Stay away from overhead power lines and other obstructions during assembly. Contact with power lines can cause electrocution.
- Do not work in high winds.

5.2. Timing Considerations

When planning the location of the bulk feed tank and related items, consider the following:

1. The position of the vent cap and remote vent cap opener relative to the filling location and desired auger positioning. Note the eye bolt gets bolted on at the eave relative to the cable location.
2. The location of the stencil sheet relative to other features–particularly leg locations.
3. The location of the roof ladder and sidewall ladder. Note that hopper ladder braces are bolted between the supporting legs. Therefore ladder placement should be timed such that they are between a pair of legs.

5.3. Assembly Process and Methods

Lifting BFTs

Smaller BFTs can be lifted by a ring underneath the center cap as illustrated in the post and pully method below. This technique should be used for the assembly of wall sheets only; not for the slinging of the entire bin. For larger loads, and for slinging completed bins, a more secure attachment to the eave of the bin, as illustrated in the crane assist method, is recommended.

Figure 3. Lifting BFTs

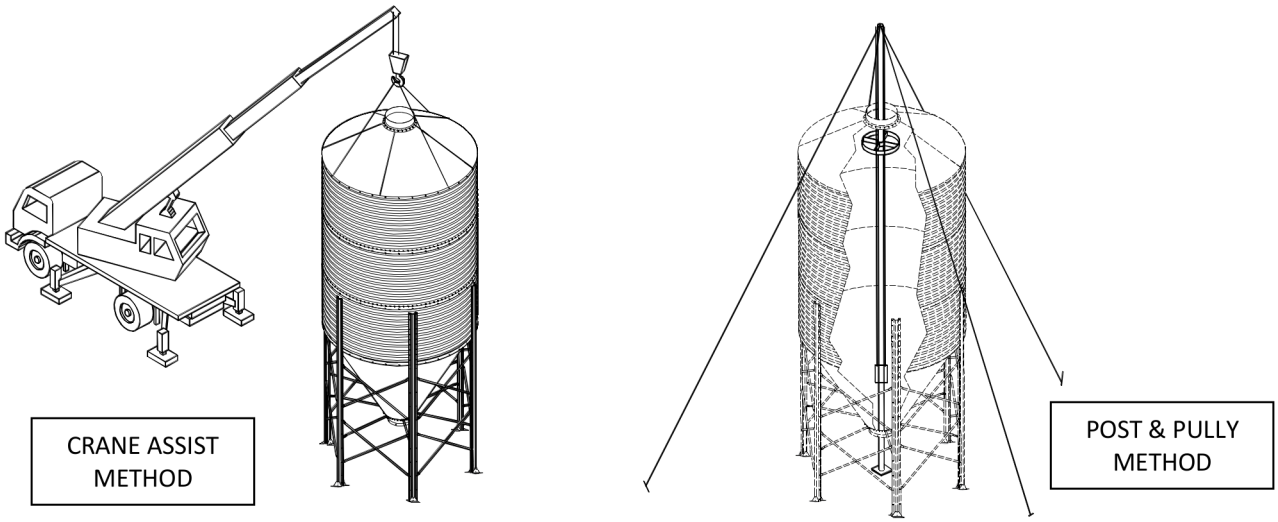

Assembling 9–foot and 12–foot BFTs

The following instructions cover the assembly of both 9' bins (902H60 and 903H60) and the 12' bins (1202H60 and 1203H60). The main difference between the two is that the 9' bins have a simple one-part leg and ribless roof panel, while the 12' bins have a multi-part complex leg assembly and a ribbed roof panel.

5.4. Assemble the Top Tier

1. Assemble the top tier of wall sheets as per Section 5.6. – Wall Sheet Assembly Detail on page 21 and Section 6.3. – Hardware Usage on page 37.
2. Apply caulking to both sides of vertical wall seam holes.
3. Use 3/8" x 1" hardware for vertical wall sheet seams.

5.5. Roof Assembly

5.5.1 Roof Assembly - 9' Bin (902H60 and 903H60)

1. When positioning roof panels onto wall sheets, apply caulking to both sides of the mating horizontal wall sheet holes.

Figure 4. Assembling roof panels to wall sheets

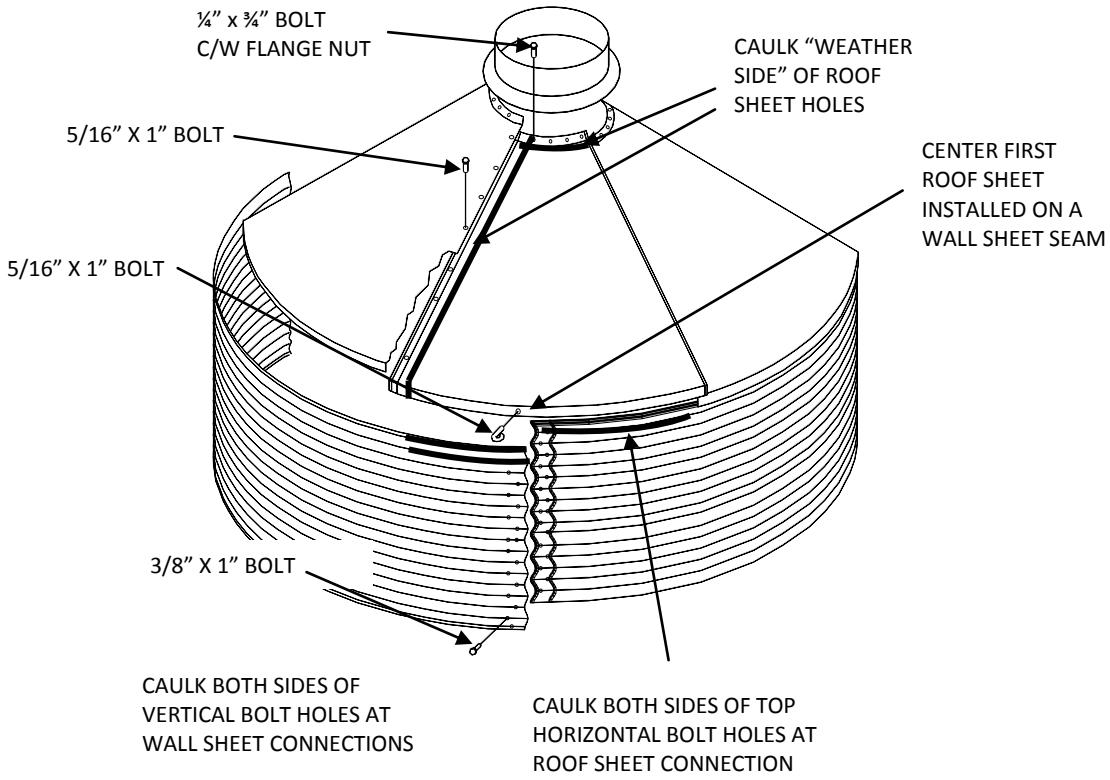

2. Center the first roof panel on a vertical wall seam and attach using 5/16" x 1" hardware.
3. Assemble roof panels in a clockwise pattern as shown in Figure 4 on page 18.
   a. Apply caulking to the weather side of the roof panel bolt holes.
   b. Use 5/16" x 1" hardware.
4. Attach the remote vent cap opener (RVCO) to the vent cap using the instructions provided with the RVCO.
   a. Note that an eye bolt is included for the remote vent opener cable.
   b. Attach the eye bolt at the eave, in line with the vent cap hinge.
   c. Enlarge the hole, if necessary.
   d. Install a second eye bolt on a leg.
5. Apply caulking to the weather side of top bolt holes.
   a. Attach the vent cap.
   b. Use ¼" x ¾" bolts and nuts.
6. Assemble the roof ladder rungs to the roof ladder side rails using 3/8" x 1 ½" bolts.

7. Assemble the ladder to the roof using ¼" x ¾" bolts at peak and 5/16" x 1" bolts at eave. (See Figure 5 on page 19.)
   a. Install the ladder such that it is centered on a roof sheet panel.
   b. Time the ladder location with the desired wall sheet ladder and hopper ladder location.

Figure 5. Roof Ladder Assembly Detail

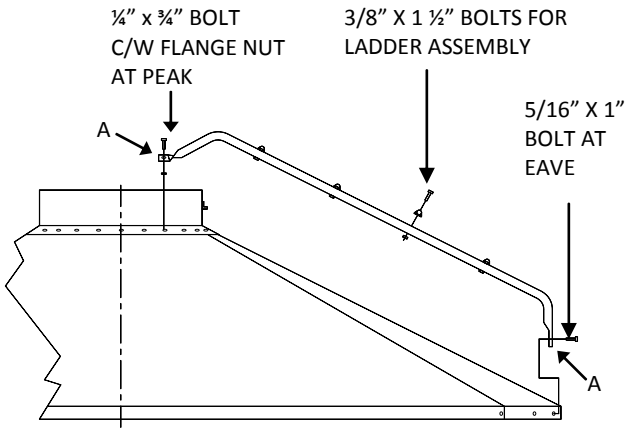

FOR CORRECT INSTALLATION CENTER ROOF LADDER ON A ROOF PANEL.

8. Make sure all nuts and bolts are tightened before proceeding.

5.5.2 Roof Assembly - 12' Bin (1202H60 and 1203H60)

1. Bolt on the top ring angles to the wall sheets using 3/8" x 1" bolts.
2. Apply caulking to the weather side of the top ring angle and wall sheet connection as shown in Details G and H in Figure 6 on page 20.
3. Attach the remote vent cap opener (RVCO) to the vent cap using the instructions provided with the RVCO.
   a. Note that an eye bolt is included for the remote vent opener rope.
   b. Attach the eye bolt at the eave, in line with the vent cap hinge.
   c. Enlarge the hole, if necessary.

Figure 6. 12' Roof Assembly Detail

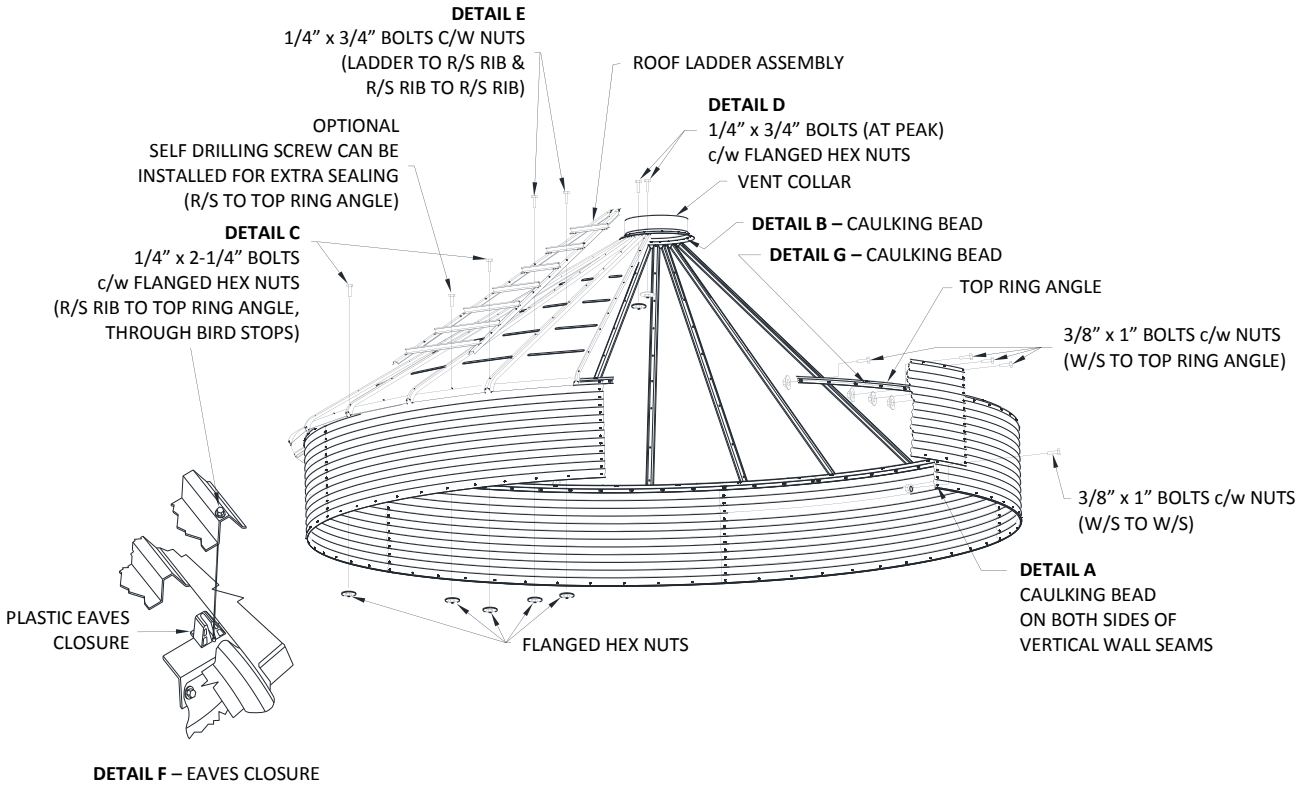

4. Position the vent cap and add roof sheets between the top ring angle and vent collar as shown in Figure 6 on page 20.

   a. Add roof sheets in a counter clockwise manner with the large rib on top and the small rib on the bottom.

Figure 7. Roof Sheet Overlap Detail

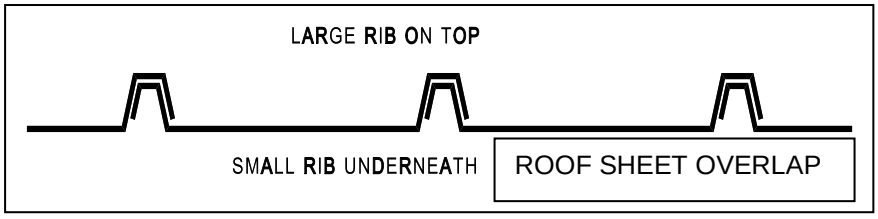

Description	Roof Sheet	Top Angle	Vent Assembly	Ladder	Eaves Closure
P/N for 12' Bin	235600	236120	236053	235615	235651

   b. Use 1/4" x ¾" bolts at all roof panel connections.

   c. Caulk around the weather side of the vent collar and between the roof sheets and top angles as shown in Details A and B in Figure 6 on page 20.

5. Bolt on the roof ladder at the appropriate location using the same bolt holes and hardware as for the roof panels.

   a. Use the 235615 ladder assembly and cut off the last rung on site to properly fit the assembly.

6. Plastic eaves closures bolt on where the roof ribs meet the top ring angle as illustrated in Detail F in Figure 6 on page 20.
   a. Secure with ¼" x 2 ¼" bolts.

5.6. Wall Sheet Assembly Detail

1. Assemble the remaining wall sheets as per Figure 8 on page 21.
   a. Use 3/8" x 1" hardware.
2. Apply rope caulking underneath the bottom holes of the assembled wall seams on the weather side on the inside surface before bolting on lower tiers.
3. Center the wall sheets on the previous tier and place lower sheets on the inside of the upper sheets such that water sheds.
4. Caulk both sides of vertical wall sheet seams.
5. The bottom tier of wall sheets must be oriented such that the connection holes to the hopper sheets are along the bottom edge.
6. Tighten all hardware.

Figure 8. Wall sheet caulking and assembly detail

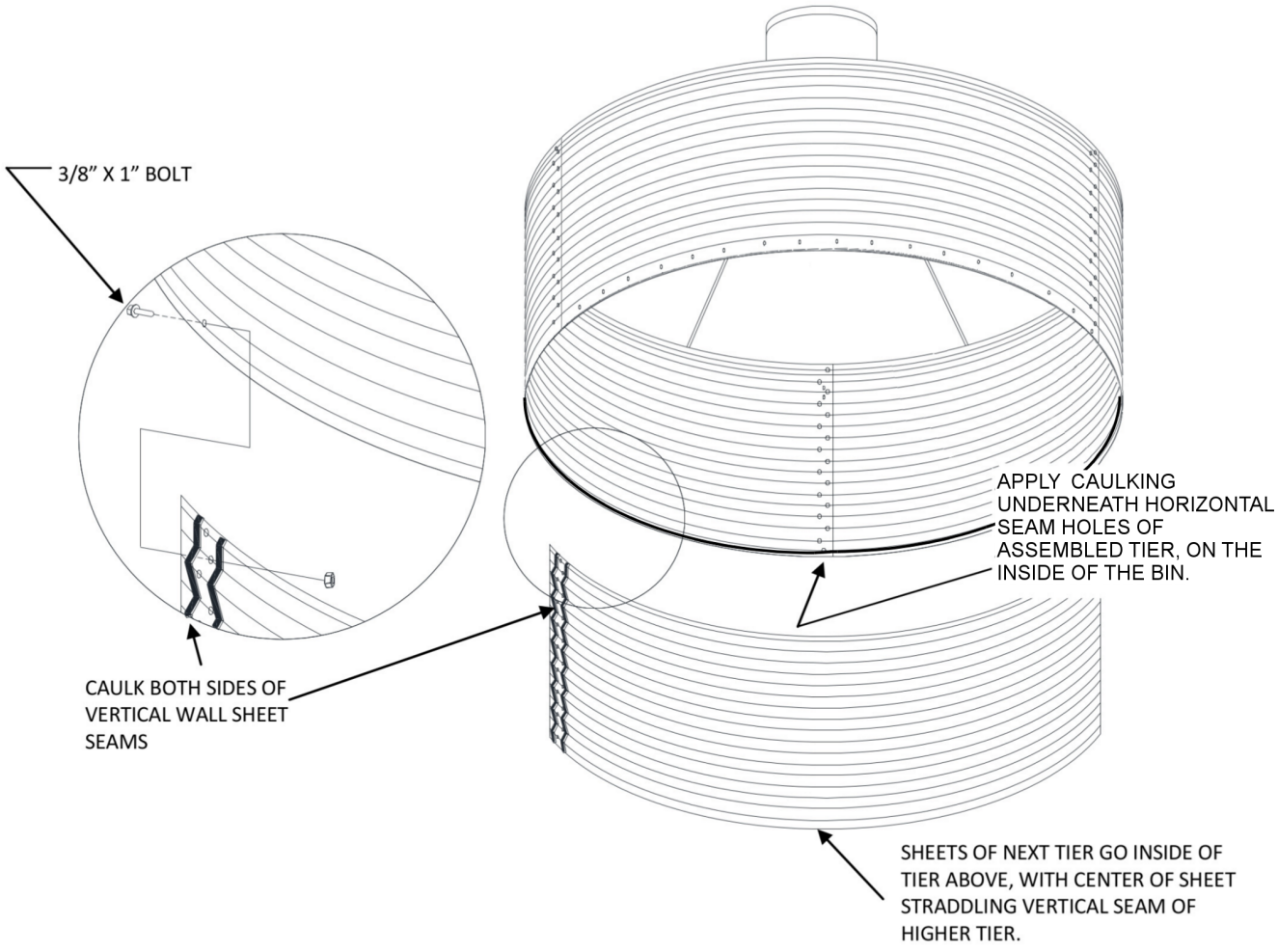

Note

Install the bottom tier such that the holes that mate to the hopper sheets are along the bottom edge.

5.7. Wall Sheet Layouts

Install the bottom tier such that the holes that mate to the hopper sheets are along the bottom edge.

Figure 9. 902, 903, 1202 and 1203 wall sheet layouts

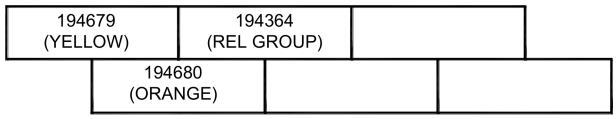

902

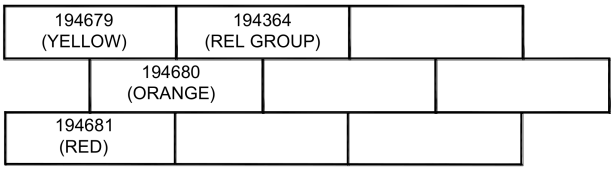

903

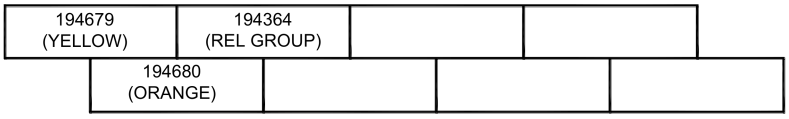

1202

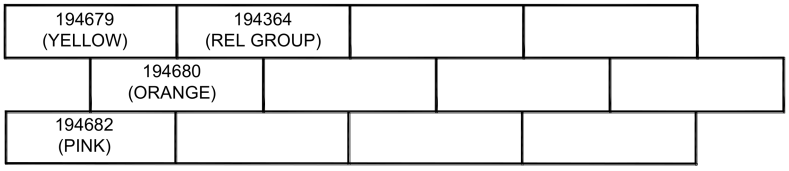

1203

5.8. Leg Assembly Detail

Leg Assembly — General

1. Assemble the legs as described in the following procedures (different for 9' and 12' BFTs).
2. After the legs have been assembled, bolt them onto the wall sheets at the appropriate locations to provide support for the bulk feed tank during the balance of the construction.
3. Before attaching the legs to the wall sheets, ensure that a bolt has been installed into the bottom wall sheet hole underneath the leg connection. (See ***** in Figure 10 on page 23.)
4. Install the cross bracing to stabilize the structure while the hopper sheets are being installed. (See Section 5.9. – Hopper Sheet Assembly on page 27.)

Figure 10. Leg Assembly Detail

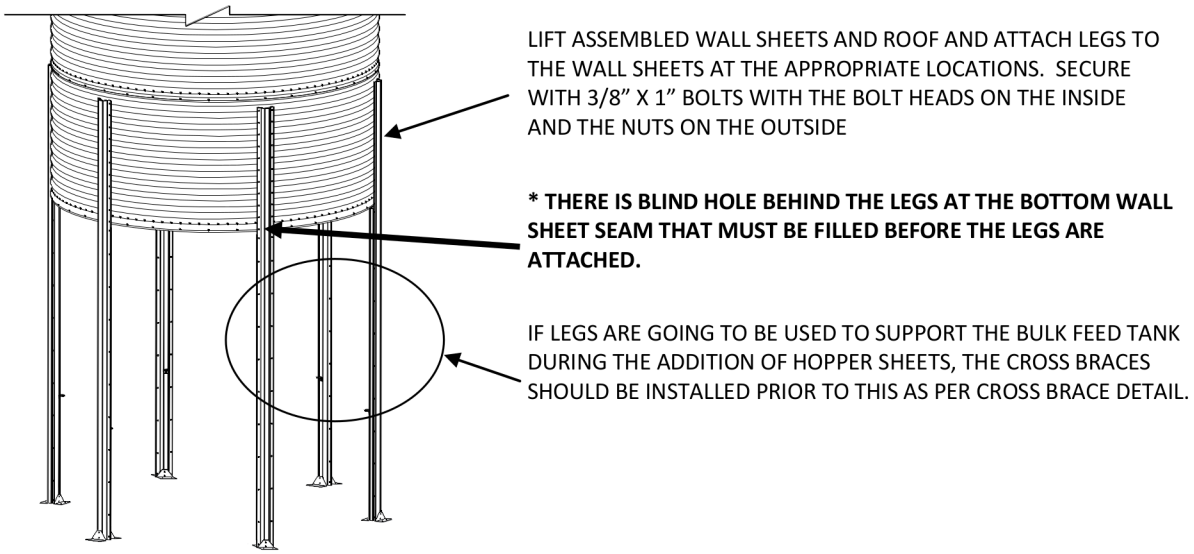

902H60 and 903H60 Leg Assembly

The 902 and 903 legs consist of three main components: an outer hat section, an inner hat section, and two base plates. The sections bolt together to form a boxed section.

1. The components can be assembled using either of the following methods:

   - Bolted together prior to assembly to the wall sheets

     OR

   - Bolted together after attaching the longer outer hat section to the wall sheets

     Note

     In either case make sure that the brace clips are attached to the inner leg segment before the entire leg assembly is bolted together. Otherwise it will not be possible to make these connections after the assembly is completed.

Figure 11. 902H60 and 903H60 Leg Assembly

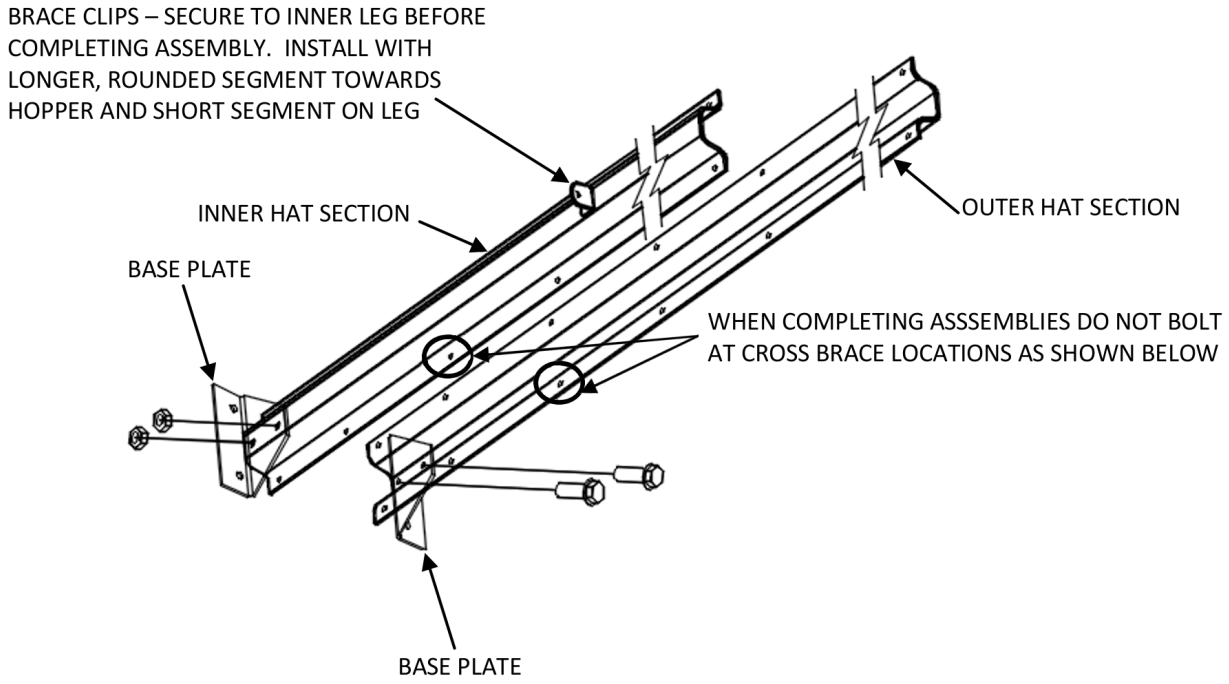

2. Assemble the inner and outer legs as shown in Figure 11 on page 24:
   a. Use 3/8" x 1" hardware for the assemblies.
   b. Do not bolt assemblies at cross brace locations. (See Figure 12 on page 24.)
3. Attach a base plate on each side of the boxed section with two 1/2" x 5-1/2" hex bolts, inserted from the base plate on the outer leg through the boxed section and base plate on the inner leg. Secure the assembly with two 1/2" nuts.

902H60 and 903H60 Cross Brace Locations

Figure 12. 902H60 and 903H60 Cross Brace Locations

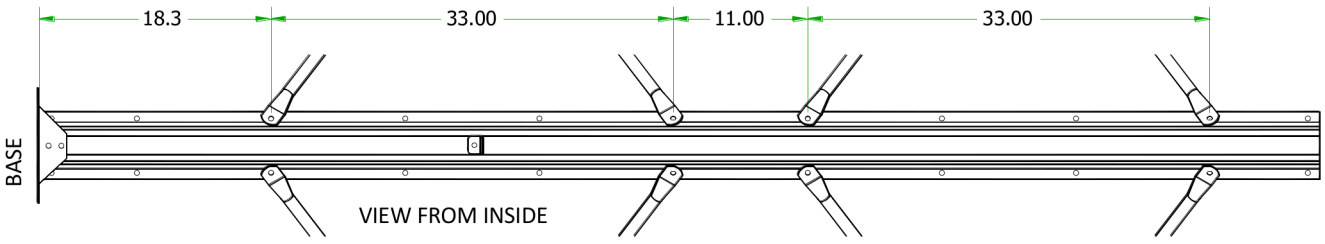

1202H60 and 1203H60 Leg Assembly

The 1202 and 1203 leg assembly consists of eight main components:

- An upper leg laminate (outer)
- An upper leg section (outer)
- A lower leg laminate (outer)
- A lower leg section (outer)
- An inner leg laminate
- An inner leg section
- Two base plates
- A splice

1. The components can be assembled using either of the following methods:
   - Bolt components together to form a boxed section prior to assembly to the wall sheets as illustrated in Figure 13 on page 26,

     OR
   - Attach the upper outer leg with laminate section to the wall sheets first, and then add the other components to complete the assembly.

   Use 3/8" x 1-1/2" hardware to bolt the inner leg and outer leg together, and use 3/8" x 1" bolts where the upper outer leg bolts to the wall sheet.

   Note

   In either case make sure that the brace clips are attached to the inner leg segment before the entire leg assembly is bolted together. Also, bolt the splice to both outer legs using the holes in the center web first, before completing the assembly. Otherwise it will not be possible to make these connections after the assembly is completed.

Figure 13. 1202H60 and 1203H60 Leg Assembly

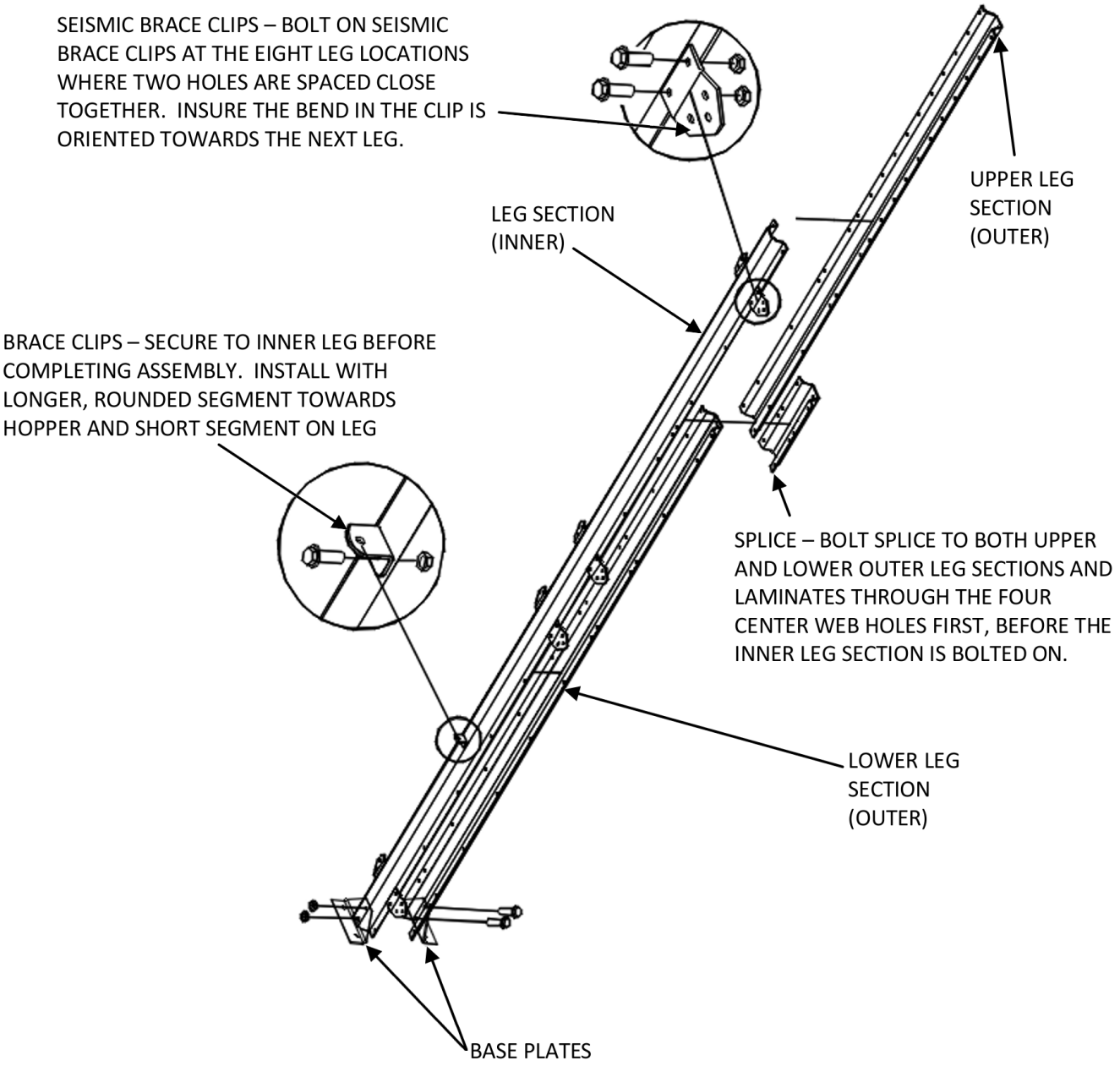

2. Bolt on the seismic brace clips to complete the assembly
3. Attach a base plate on each side of the boxed section with two 1/2" x 5-1/2" hex bolts, inserted from the base plate on the outer leg through the boxed section and base plate on the inner leg. Secure the assembly with two 1/2" nuts.

1202H60 and 1203H60 Cross Brace Locations

Figure 14. 1202H60 and 1203H60 Cross Brace Locations

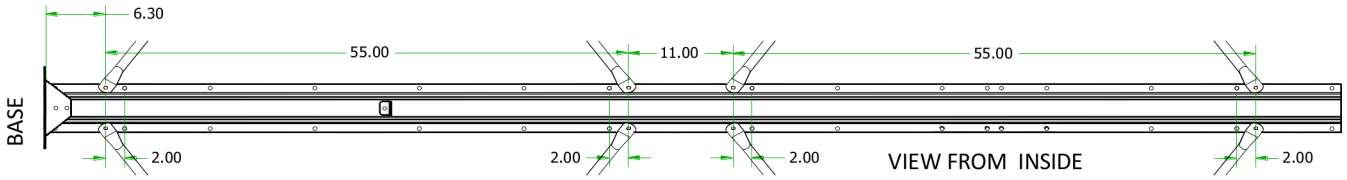

5.9. Hopper Sheet Assembly

The hopper sheets are installed to the wall sheets with 3/8" x 1" bolts inserted from the inside with nuts on the outside. **The one exception to this is at the leg locations that must have a bolt pre-installed before the leg is attached. At these locations only the bolt is installed from the outside and a bolt retainer is installed from the inside to hold the bolt in position until the hopper sheet is eventually installed.**

1. Apply caulking above the bottom holes in the bottom wall sheets.

   Note

   The timing of the hopper sheets is important. There is a square timing hole in the center of the top row of bolt holes in the hopper sheets.

Figure 15. Discharge cone timing mark for rack and pinion slide gate

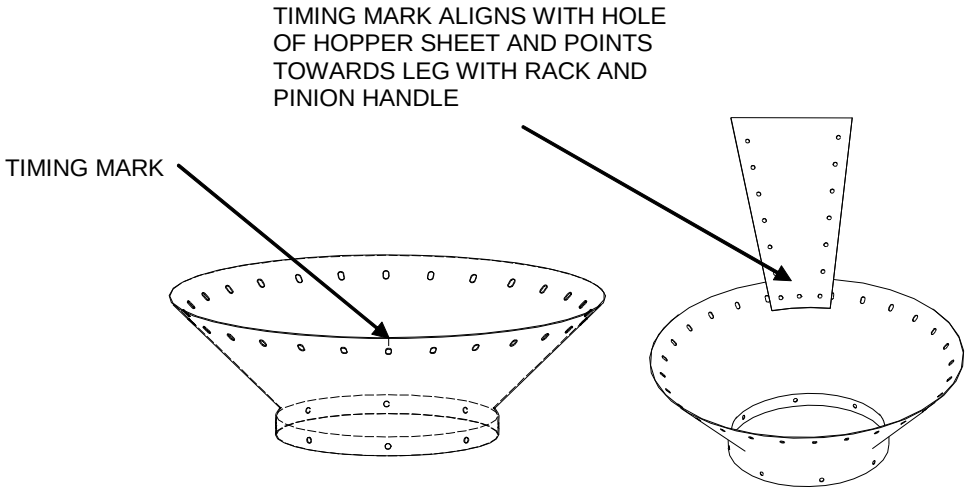

2. Position the first hopper sheet such that the square hole is one hole position to the right or left of a leg hole that already has the bolt with the bolt retainer installed.
   a. For convenience, hang the first hopper sheet such that a hole on either side of the square hole is positioned on this pre-installed bolt, and secured in place with a nut.
   b. Use 3/8" x 1" hex bolts with the bolt heads on the inside at all other locations.
3. Continue to install other hopper sheets in a clockwise rotation (viewing from the top).
   a. Locate the bend along one side of the hopper sheets close to the edge.
   b. Caulking should be run along the edge of the adjacent sheet and then the sheet with bent edge applied over this seam.
   c. Use 3/8" x 1" round head bolts on vertical hopper seams with the bolt heads on the inside.

4. To facilitate installation of the discharge on the inside, locate it inside before the final hopper sheet is installed.

   Tip

   To prevent interference with the hopper sheet installation, secure the discharge cone on the inside of the hopper by attaching it to a completed hopper seam bolt until needed.

   a. If utilizing the rack and pinion shut off, consider the timing of the discharge cone to the rest of the hopper.

      There is a timing mark on the outside top edge of the discharge cone.

   b. Line up the slotted hole beneath this mark with the hole at the bottom of the hopper cone.

   c. Make sure it points toward the leg that the rack and pinion will be mounted to.

   d. Before installing the discharge cone caulk on both sides of the mating holes.

   e. Install using 3/8" x 1" round head bolts with the bolt heads on the inside.

Figure 16. Hopper Sheet Details

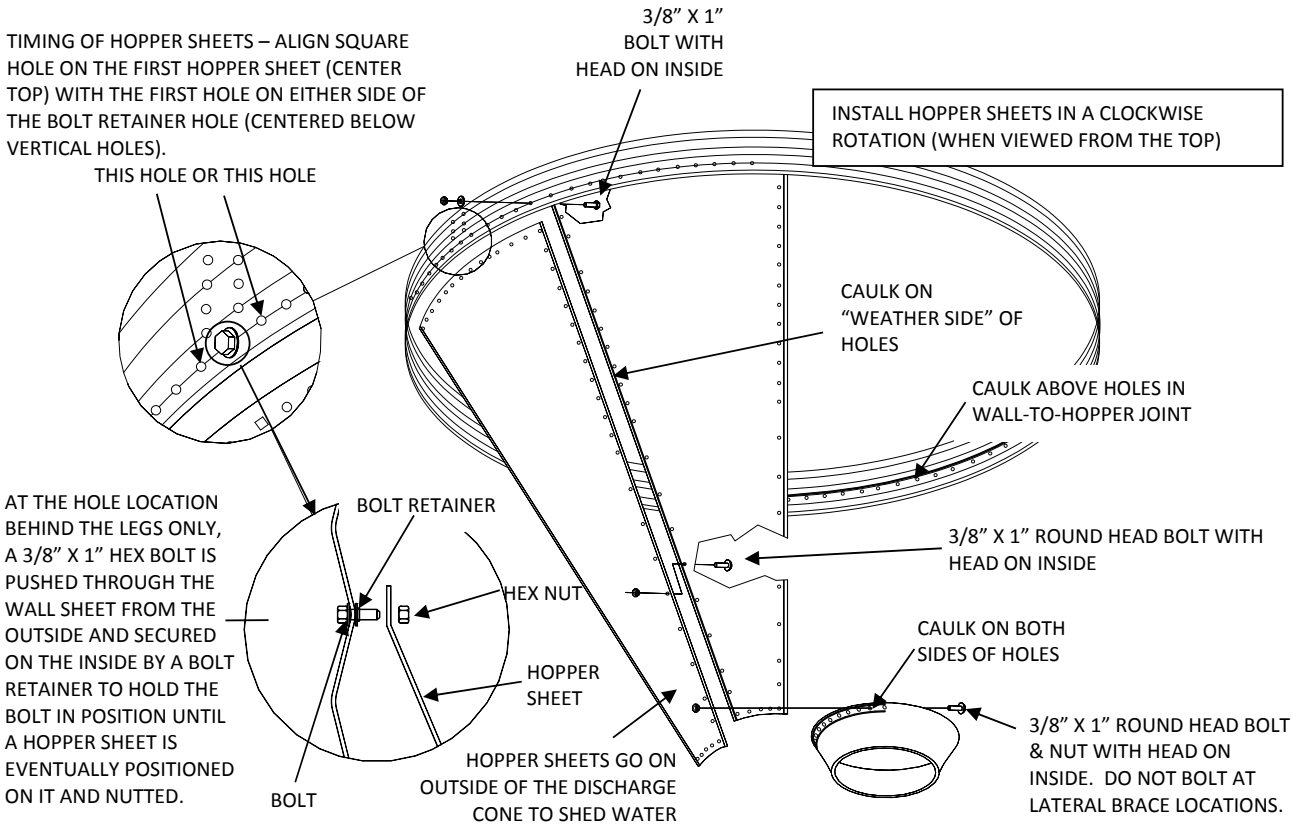

5.10. Brace Detail

Install cross braces between legs and lateral braces between the leg and cone as illustrated in Figure 17 on page 29 and Figure 18 on page 30.

902H60 and 903H60 Leg Brace Assembly

1. Install lateral braces between the hopper discharge cone and the brace clips previously installed on the inside of the legs as illustrated in Figure 17 on page 29.
   a. Use round head 3/8" x 1" bolts, bolted from inside the transition cone.
2. Install cross bracing between adjacent legs as illustrated in Figure 17 on page 29.
   a. At these locations, for seismic upgrades, 3/8" x 1 ½" bolts and flanged nuts must be used at all cross brace connections.
   b. Note that all diagonal brace lengths have been sized for attachment to the inside surface of the upright legs. The diagonals are too short to be attached to the outside of the leg.

Figure 17. Installing 902H60 and 903H60 Leg Braces

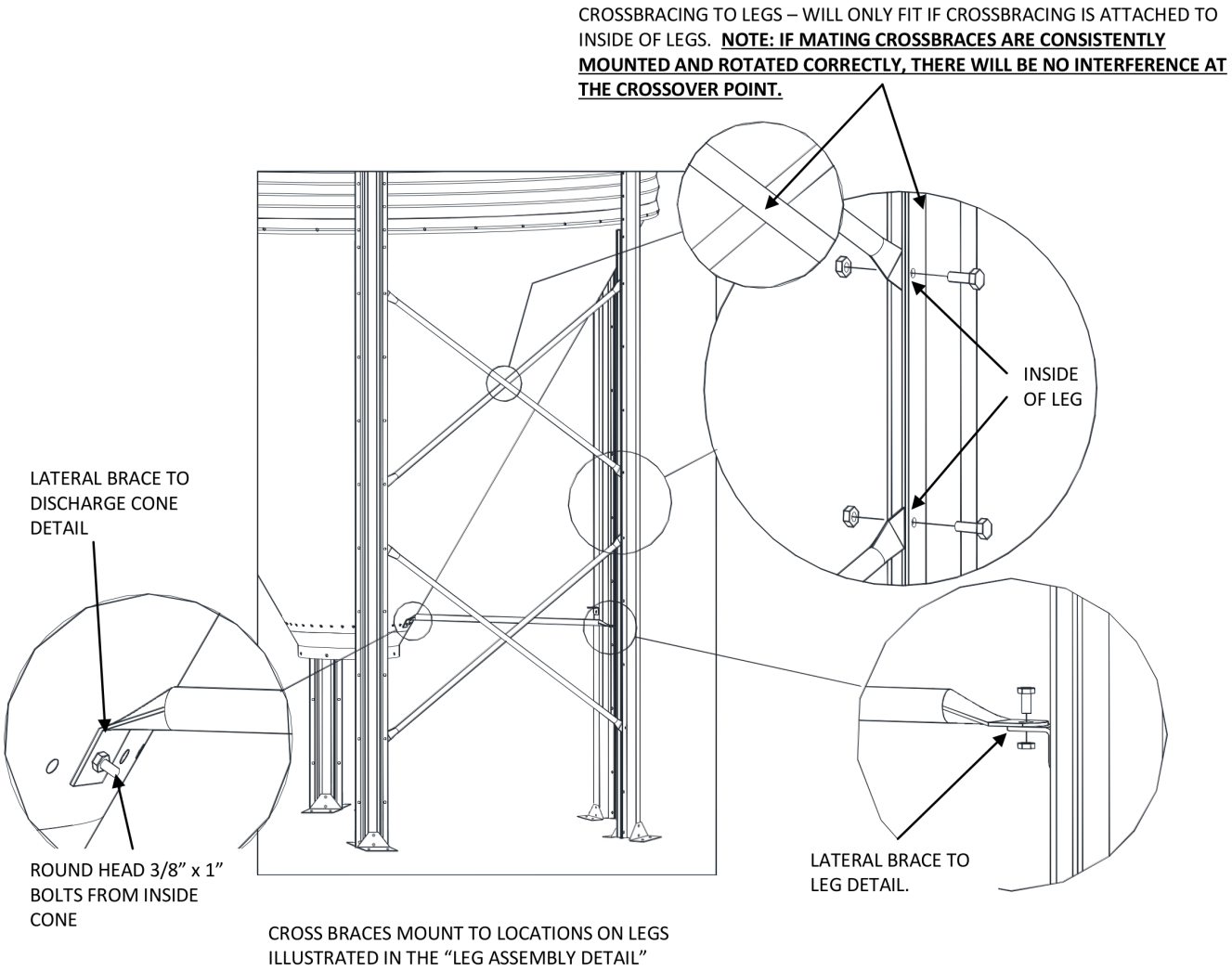

1202H60 and 1203H60 Leg Brace Assembly

1. Install lateral braces between the hopper discharge cone and the brace clips previously installed on the inside of the legs as illustrated in Figure 18 on page 30.
   a. Use round head 3/8" x 1" bolts, bolted from inside the transition cone.
2. Install cross bracing between the seismic brace clips previously installed on the leg assemblies.
   a. Use two 3/8" x 1" bolts at all cross brace attachment locations.
   b. To avoid interference at the crossover point, install one cross brace on the inside of the leg, and the mating cross brace on the outside of the leg, with the tubes rotated to avoid interference.

Figure 18. Installing 1202 and 1203 Leg Braces

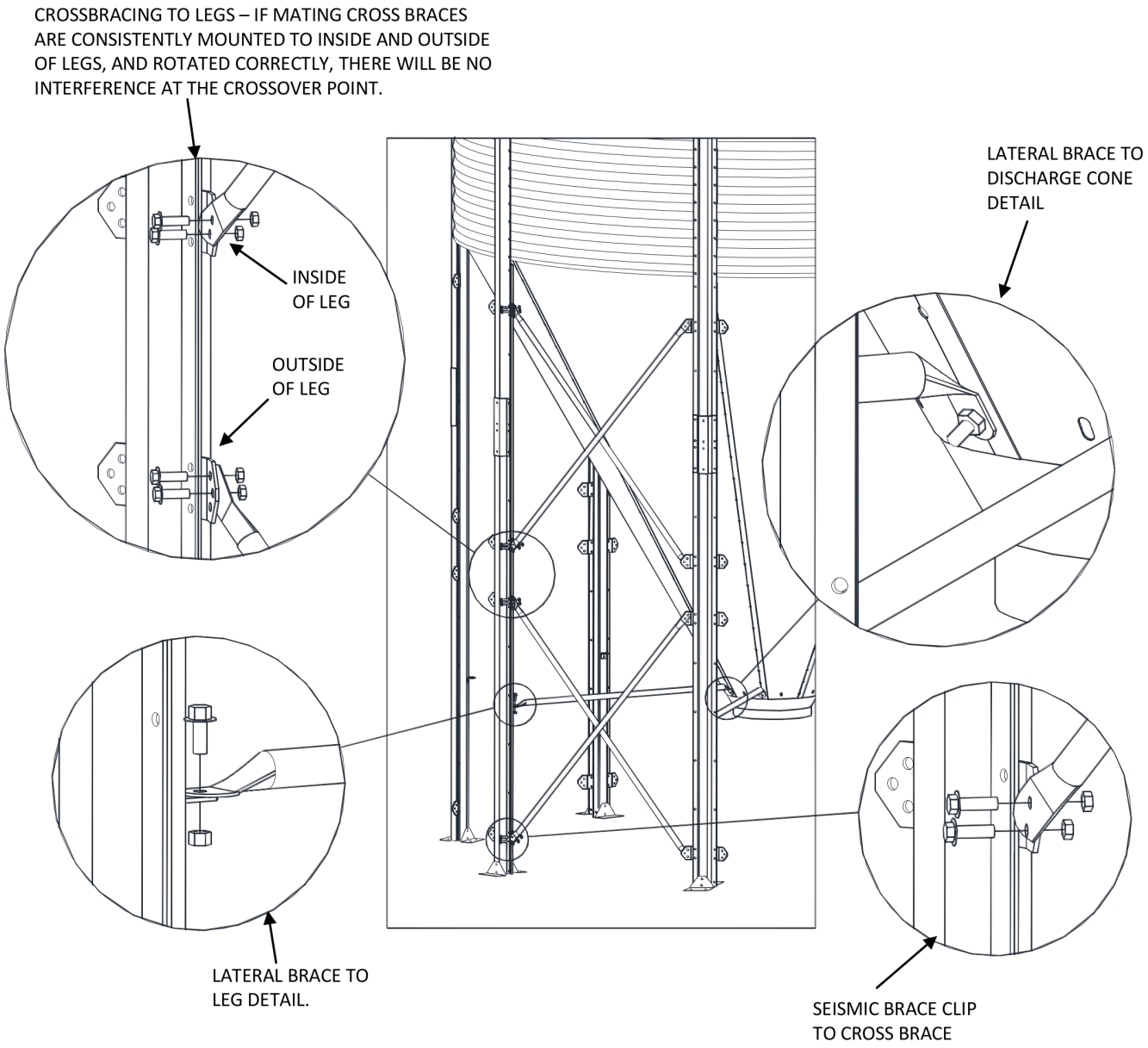

5.11. Bolt On Ladders, Cages and Pass-Through Rails

If required, bolt on ladders, cages and pass through rails as shown in Figure 19 on page 31.

1. Bolt the ladder components on from top to bottom as the bulk feed tank is assembled.
2. Note that corrugated hopper ladder braces span between supporting legs at 44" centers.
3. Secure using 3/8" x 1" hardware.
4. Ladder clips bolt on as normal.
5. Drill holes as necessary.

Figure 19. Ladder Details

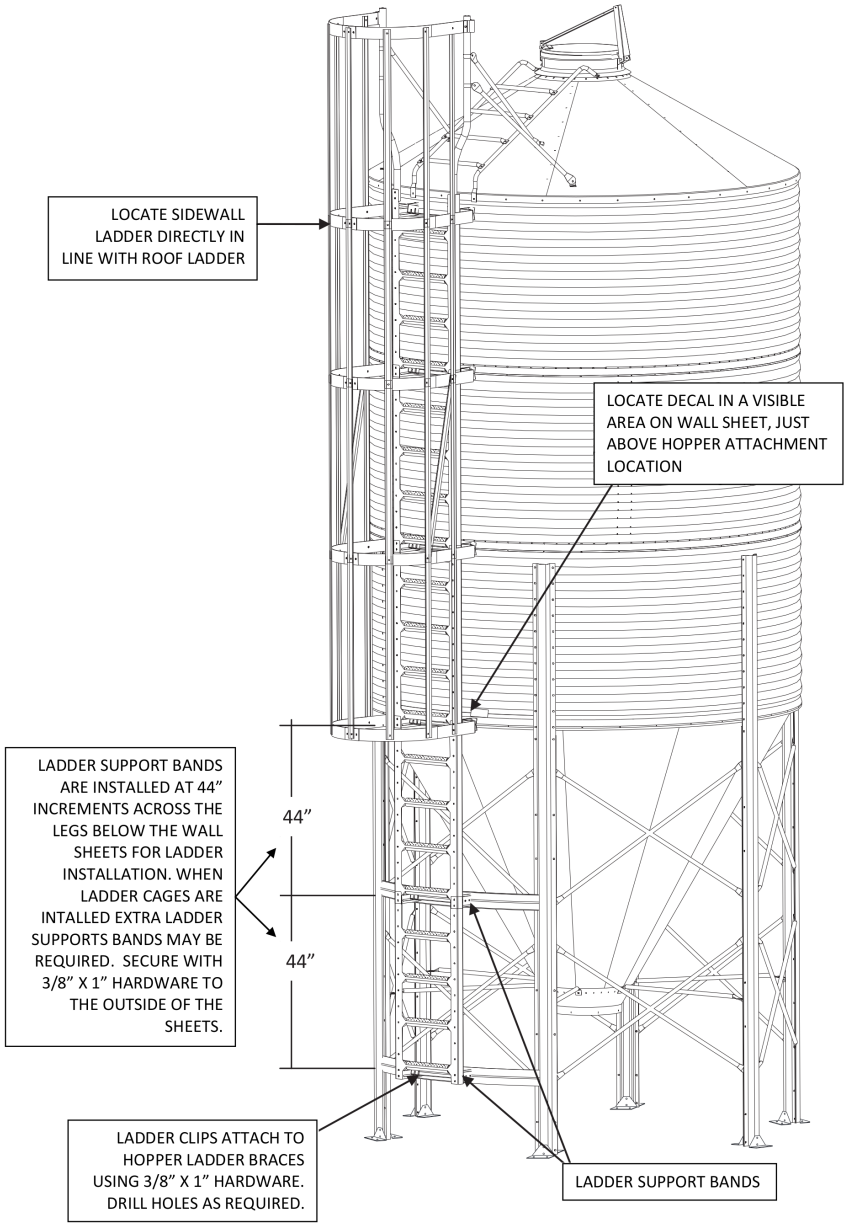

5.12. Position on Foundation and Anchor

1. Position the completed bulk feed tank on its foundation.
2. Anchor the feed tank to the foundation as required.

6. Appendix

6.1. Parts List

Table 1. New Zealand Special 902, 903, 1202, and 1203 BFT Parts — Without Accessories

Part Number	Description	Unit Weight (lbs)	Bin Model and Part Number			
			240313NZ	240314NZ	240319NZ	240320NZ
			902	903	1202	1203
236053	Vent Cap Assembly - nonpainted	15.1	1	1	1	1
235514	Remote Vent Cap Opener	4.6	1	1	1	1
240029	Roof Sheet (9')	17.3	6	6		
235600	Roof Sheet (12')	6.0			24	24
236120	Top Ring Angle (12')	16.0			4	4
W902BFT-NZ	Wall Sheet Bundle - 902 NZ	393.0	1			
W903BFT-NZ	Wall Sheet Bundle - 903 NZ	642.0		1		
W1202BFT-NZ	Wall Sheet Bundle - 1202 NZ	524.4			1	
W1203BFT-NZ	Wall Sheet Bundle - 1203 NZ	915.0				1
240042	Hopper Sheet (9')	31.0	9	9		
240247	Hopper Sheet (12')	41.7			12	12
240241	Transition Cone (19')	10.5	1	1		
240254	Transition Cone (12')	10.5			1	1
240267	Leg (148.3" Long) - 9' Outer NZ	52.3	6	6		
240268	Leg (105.3 Long) - 9' Inner NZ	37.1	6	6		
240250	Leg (136.3 Long) - 12' Inner	48.0			8	8
240251	Leg (79.5" Long) - 12' Upper Outer	28.0			8	8
240252	Leg (99.8" Long) - 12' Lower Outer	35.1			8	8
240269	Leg (136.3 Long) - 12' Inner - Laminate	32.5			8	8
240270	Leg (79.5" Long) - 12' Upper Outer - Laminate	19.0			8	8
240271	Leg (99.8" Long) - 12' Lower Outer - Laminate	23.8			8	8
240253	BFT Leg Splice - 12'	3.1			8	8
240245	Horizontal Brace to Hopper - 9'	3.1	6	6		
240246	Diagonal Brace between Legs - 9'	4.6	24	24		
240249	Horizontal Brace to Hopper - 12'	5.1			8	8
240248	Diagonal Brace between Legs - 12'	6.3			32	32
240030	Hardware 9' BFT - NZ Special	80.62	1	1		
240031	Hardware 12' BFT - NZ Special	165.47			1	1
232850	Hardware Pail 3/8 x 1 bolts (700)	48.0	1	1	2	2

Table 2. New Zealand Special 902, 903, 1202, and 1203 BFT Parts — With Accessories

Part Number	Description	Unit Weight (lbs)	Bin Model and Part Number			
			240313NZ	240314NZ	240319NZ	240320NZ
			902	903	1202	1203
236053	Vent Cap Assembly - nonpainted	15.1	1	1	1	1
235514	Remote Vent Cap Opener	4.6	1	1	1	1
240029	Roof Sheet (9')	17.3	6	6		
235600	Roof Sheet (12')	6.0			24	24
236120	Too Ring Angle 112')	16.0			4	4
W902BFT-NZ	Wall Sheet Bundle - 902 NZ	393.0	1			
W903BFT-NZ	Wall Sheet Bundle - 903 NZ	642.0		1		
W1202BFT-NZ	Wall Sheet Bundle - 1202 NZ	524.4			1	
W1203BFT-NZ	Wall Sheet Bundle -1203 NZ	915.0				1
240042	Hopper Sheet (9')	31.0	9	9		
240247	Hopper Sheet (12')	41.7			12	12
240241	Transition Cone (19')	10.5	1	1		
240254	Transition Cone (12')	10.5			1	1
240267	Leg (148.3" Long) - 9' Outer NZ	52.3	6	6		
240268	Leg (105.3 Long) - 9' Inner NZ	37.1	6	6		
240250	Leg (136.3 Long) - 12' Inner	48.0			8	8
240251	Leg (79.5" Long) - 12' Upper Outer	28.0			8	8
240252	Leg (99.8" Long) - 12' Lower Outer	35.1			8	8
240269	Leg (136.3 Long) - 12' Inner - Laminate	32.5			8	8
240270	Leg (79.5" Long) - 12' Upper Outer - Laminate	19.0			8	8
240271	Leg (99.8" Long) - 12' Lower Outer - Laminate	23.8			8	8
240253	BFT Leg Splice - 12'	3.1			8	8
240245	Horizontal Brace to Hopper - 9'	3.1	6	6		
240246	Diagonal Brace between Legs - 9'	4.6	24	24		
240249	Horizontal Brace to Hopper - 12'	5.1			8	8
240248	Diagonal Brace between Legs - 12'	6.3			32	32
240255	Ladder Support Band - 9'	9.7	4	4		
240256	Ladder Support Bands - 12'	9.7			3	3
234520-5	Ladder Package	98.5	1		1	
234520-6	Ladder Package	110.0		1		1
240523-3	Cage Package - 3 tiers	128.6	1			
240523-4	Cage Package - 4 tiers	140.3		1		
234521-3	Cage Package - 3 tiers	135.3			1	
234521-4	Cage Package - 4 tiers	166.1				1
240114	Roof Ladder (9')	9.0	1	1		
235615	Roof Ladder (12')	13.2			1	1
240030	Hardware 9' BFT - NZ Special	80.62	1	1		
240031	Hardware 12' BFT - NZ Special	165.47			1	1
232850	Hardware Pail 3/8 x 1bolts (700)	48.0	1	1	2	2

6.2. BFT Part Identification

234518 — Cross Brace Bracket

236061 – Vent Collar

240243 – Leg 9' Outer (148.3")

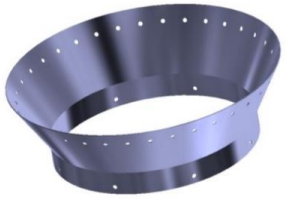

240241 – Transition Cone 6' & 9'

240254 – Transition Cone 7' & 12'

240246 – Leg Diagonal Brace 9'

240248 – Leg Diagonal Brace 12'

240245 – Horizontal Brace 9'

240249 – Horizontal Brace 12'

240244 – Leg 9' Inner (105.3")

240250 – Leg 12' Inner (136.3")

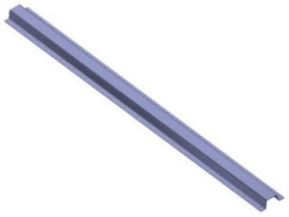

240251 – Leg 12' Upper Outer (79.5")

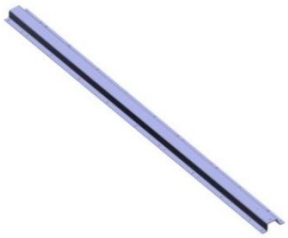

240252 – Leg 12' Lower Outer (99.8")

240253 – Leg Splice

240255 – Ladder Support Band 9'

240256 – Ladder Support Band 12'

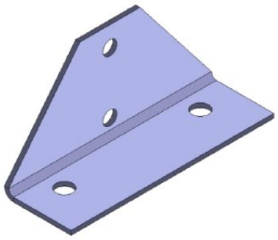

240546 – Base Plate

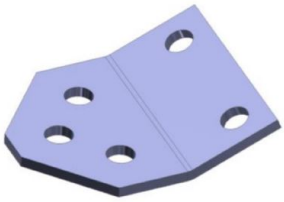

240258 – Brace Clip 12'

6.3. Hardware Usage

Table 3. Roof Hardware

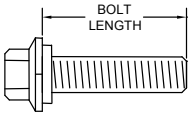	1/4" x 3/4" Flanged Hex Bolt (Washer)	1/4" x 2-1/4" Flanged Hex Bolt (Washer)	1/4" Flanged Lock Nut	5/16" x 1" Flanged Hex Bolt (Washer)	5/16" Flanged Lock Nut	3/8" x 1" Flanged Hex Bolt (Washer)	3/8" x 1-1/2" Flanged Hex Bolt (Washer)	3/8" Hex Nut
	235900 (150) 235901 (75)	235903 (25)	235907 (50)	235915 (50)	235925 (50)	232850 (700) 235943 (50)	235946 (100)	232850 (700) 235950 (300) 235951 (100)
9' ROOF								
ROOF SHEET to WALL SHEET				●	●			
ROOF SHEET to ROOF SHEET				●	●			
VENT COLLAR to ROOF SHEET	●		●					
ROOF LADDER RUNGS to ROOF LADDER SIDE RAILS							●	●
ROOF LADDER ASSEMBLY to ROOF SHEET (see notes)	●		●	●	●			
12' ROOF								
TOP RING ANGLE to WALL SHEET						●		●
TOP RING ANGLE JOINTS to WALL SHEET						●		●
VENT COLLAR to ROOF SHEET	●		●					
ROOF SHEET RIB to ROOF SHEET RIB	●		●					
ROOF SHEET RIB to BIRD STOP to TOP RING ANGLE		●	●					
ROOF LADDER ASSEMBLY to ROOF SHEET RIB	●		●					

Note

- Use 1/4" x 3/4" hex bolts at peak and 5/16" x 1" hex bolts at eave for connecting the roof ladder assembly to the roof sheet on 9' BFT.
- Both 3/8" flanged hex nuts and regular hex nuts are provided. There are a few locations where the flanged nuts must be used for design integrity, or ease of assembly. These are shown above as (♦). Either nut type can be used for the other locations, shown above as (●).

Table 4. Bin and Hopper Hardware

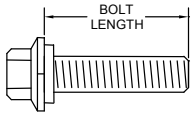	3/8" x 1" Flanged hHex Bolt (Washer)	3/8" x 1" Round Head Bolt c/w Slot	3/8" x 1-1/2" Flanged Hex Bolt (washer)	3/8" Flanged Lock Nut	3/8" Hex nut	3/8" Bolt Retainer	1/2" x 5-1/2" Flanged Hex Bolt	1/2" Flanged Lock Nut
	232850 (700) 235943 (50)	235959 (300)	235946 (100)	235954 (300)	232850 (700) 235950 (300) 235951 (100)	199588 (10)	154107	154201
WALL SHEET to WALL SHEET	●				●			
OUTER LEG to WALL SHEET	●				●			
INNER LEG to HORIZONTAL BRACE CLIP	●				●			
LEG ASSEMBLY to BRACE PLATES							●	●
INNER LEG to OUTER LEG (see notes)	●		●		●			
WALL SHEET to HOPPER SHEET	●				●			
WALL SHEET to HOPPER SHEET CENTERED ON LEGS	●				●	●		
HOPPER SHEET to HOPPER SHEET		♦		♦				
HOPPER SHEET to TRANSITION CONE		♦		♦				
HORIZONTAL BRACE to HORIZONTAL BRACE CLIP	●				●			
HORIZONTAL BRACE to TRANSITION CONE		●			●			
DIAGONAL CROSS BRACES to LEG ASSEMBLY (9' BFT)			●		●			
DIAGONAL BRACE SEISMIC CLIPS to LEGS (12' BFT)	●				●			
DIAGONAL CROSS BRACES to SEISMIC CLIPS (12' BFT)	●				●			
HOPPER LADDER BRACE to LEG ASSEMBLY	●				●			

Note

- Use 3/8" x 1-1/2" hex bolts for inner leg to outer leg connections on 12' BFT.
- Both 3/8" flanged hex nuts and regular hex nuts are provided. There are a few locations where the flanged nuts must be used for design integrity, or ease of assembly. These are shown above as (♦). Either nut type can be used for the other locations, shown above as (●).

6.4. Recommended Bolt Assembly

When tightening bolts, tighten the nut on the bolt until a “snug-tightened condition” has been achieved. A “snug-tightened condition” is defined in *Specification for Structural Joints Using ASTM A325 or A490 Bolts* (Research Council on Structural Connections: June 2004), which states:

“*The snug-tightened condition is the tightness that is attained with a few impacts of an impact wrench or the full effort of an ironworker using an ordinary spud wrench to bring the connected plies into* ***firm contact****.*”

A properly tightened bolt will compress the sealing washer noticeably. All assembly crew members must be made aware of this requirement, and must know how to achieve a snug-tightened condition using common bin-building tools.

It is important that the bolts in the vertical wall sheet seams are tightened enough to squeeze the caulking and bring the wall sheet surfaces into firm contact with each other. This is especially important to monitor when installing bolts in temperatures approaching -10°C (14°F).

The following table shows the minimum impact gun torque capacity necessary to achieve a snug-tightened condition for bolts used in the assembly process.

Table 5. Recommended Impact Gun Torque Values Capacity to Achieve Snug-Tightened Bolts

Bolt Diameter	Bolt Grade	Grade Mark	Recommended Torque Capacity		
			in-lb	ft-lb	N-m
1/4”	Grade 8.2		75	6	8
5/16"	Grade 8.2		215	18	24
3/8"	Grade 8.2		370	31	42
7/16"	Grade 8.2		600	50	68
1/2”	Grade 8.2		960	80	108
5/8”	Grade 8.2		1800	150	203
3/4”	Grade 5		3230	269	365

For proper sealing, do not overtighten the wall seam connections. Sealing is not critical on upright splice connections; these connections should be tightened securely to prevent loosening.

Hold the bolt head securely when tightening the nut to prevent damage to the sealing washer.

Important

ALWAYS TIGHTEN THE NUT, NOT THE BOLT!

Avoid bin assembly at temperatures below -10°C (14°F) if possible. Erection in low temperatures does not ensure strong, well sealed connections. Do not substitute bolts in place of those supplied by Westeel.

7. Limited Warranty: Westeel Grain Bin Products

Westeel – Ag Growth International ("Westeel") warrants products that it has manufactured and/or that are branded with its name (the "goods") subject to the following terms and limitations, (the "warranty"):

Duration of Warranty

This warranty will run from the date of purchase from the dealer or distributor, authorized by Westeel. The duration of the warranty is limited as follows:

Galvanized Bins	5 years
EasyFlow2	24 months
Westeel Fans	36 months
Floors	12 months
Catwalk	12 months
Bulk Feed Tanks	24 months
SeedStor-K Cones	
Paint	12 months
Structural	30 months
Elite Cones	
Paint	30 months
Structural	10 years
WESTEEL cones	
Paint	No Warranty
Structural	12 months
Smooth Wall Bins	
Paint	60 months
Structural	10 years
Commercial Smooth Wall Bins	
Paint	12 months
Structural	10 years

Limitation of Remedies Replacement

Within the warranty period, Westeel will replace the goods and/or original manufactured components thereof which are found, to Westeel's satisfaction, to be defective. Westeel is not responsible for direct, indirect, special, consequential, or any other damages of any kind, including personal injury to any individual, howsoever caused, including caused by transportation of the goods for repair or replacement.

Procedure for Obtaining Service

In the event of a warranty claim, the purchaser must complete any and all information required by Westeel in order to properly assess or investigate the claim. Westeel will not be responsible for the removal of any of the goods found to be defective, or transportation charges to and from Westeel's authorized dealer or distributor, or for installation of any replacement goods and/or parts furnished under the warranty.

Limitations as to Scope of Warranty

The warranty does not extend to defects or damage caused, in whole or in part, by:

1. use of a kind and/or to a degree not reasonably expected to be made of the goods;
2. improper storage of the goods both prior to and after purchase;
3. damage caused by, or in the course of, installation or assembly;
4. any use of the goods which is not an intended use as specified in Westeel's published product literature, or otherwise specified by Westeel in writing;
5. any equipment attached to or used in conjunction with the goods;
6. any field modifications or substitutions to original bin components;
7. inadequate ventilation or any other circumstance not in keeping with proper maintenance and/or use of the goods;
8. Acts of God, accident, neglect or abuse of the goods by the purchaser and/or any other individual or entity; or
9. Any use or installation inconsistent with Westeel's Standard Disclaimers.

Limitations as to Manufacturer

The warranty does not cover products sold by Westeel that are not manufactured by Westeel. In those circumstances, the purchaser is referred to the manufacturer of those products.

Limitation of Implied Warranties and Other Remedies

To the extent allowed by law, neither Westeel nor its dealers, nor any company affiliated with Westeel makes any warranties, representations, or promises as to the quality, performance, or freedom from defect of any Product covered by this Warranty.

WESTEEL HEREBY DISCLAIMS, TO THE EXTENT APPLICABLE, ANY AND ALL IMPLIED WARRANTIES OF MERCHANTABILITY AND FITNESS FOR A PARTICULAR PURPOSE. A PURCHASER'S ONLY REMEDIES IN CONNECTION WITH THIS WARRANTY ARE THOSE SET FORTH IN THIS WARRANTY. IN NO EVENT WILL WESTEEL, ITS DEALERS, OR ANY COMPANY AFFILIATED WITH WESTEEL BE LIABLE FOR INCIDENTIAL, CONSEQUENTIAL OR PUNITIVE DAMAGES.

Some jurisdictions do not allow waivers of certain warranties, so the above waivers may not apply to you. In that event, any implied warranties are limited in duration to ninety (90) days from delivery of the products. You may also have other rights which vary from jurisdiction to jurisdiction.

Exclusive Warranty

This warranty is the only warranty provided by Westeel and all other warranties and/or commitments, whether express or implied and no matter by whom made, statutory or otherwise, are subsumed and replaced by it and are of no legal effect. If any provision of the warranty is held by a court of

competent jurisdiction to be void or unenforceable, in whole or in part, such provision shall be deemed severable and will not affect or impair the legal validity of any other provision of the warranty.

450 Desautels Street
P.O. Box 792
Winnipeg, Manitoba, R3C 2N5 Canada
Phone: (866) 299-4312
Fax: (204) 235-0796

Website: www.westeel.com
Email: info@westeel.com
©Ag Growth International Inc. 2018
Printed in Canada