LANDING GEAR POWER SWING

ELECTRIC AND HYDRAULIC (10"/13")
ASSEMBLY & OPERATION

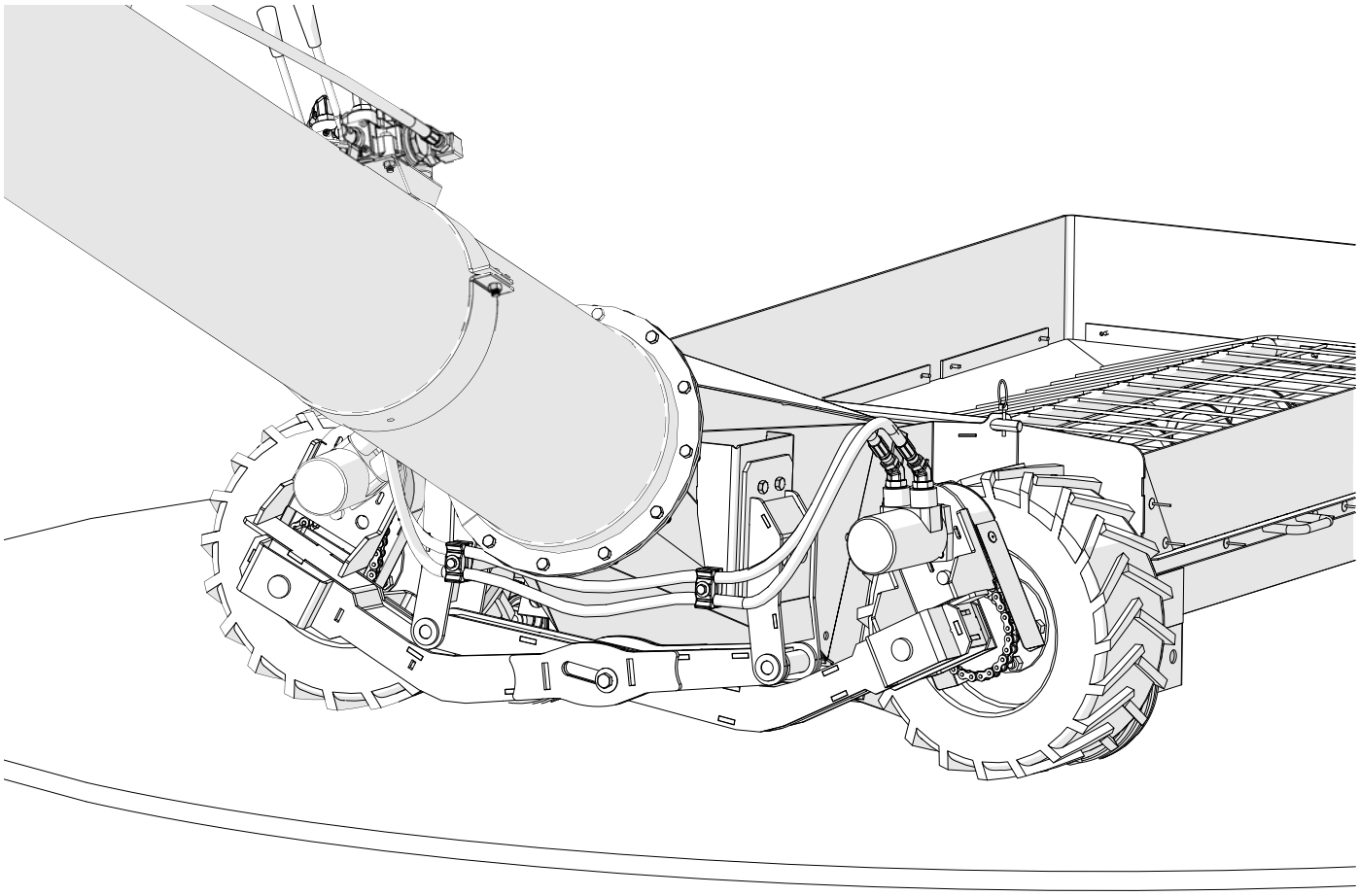

Original Instructions

Read this manual before using product. Failure to follow instructions and safety precautions can result in serious injury, death, or property damage. Keep manual for future reference.

Part Number: 31041 R1

Revised: 28/11/2018

This product has been designed and constructed according to general engineering standards[a]. Other local regulations may apply and must be followed by the operator. We strongly recommend that all personnel associated with this equipment be trained in the correct operational and safety procedures required for this product. Periodic reviews of this manual with all employees should be standard practice. For your convenience, we include this sign-off sheet so you can record your periodic reviews.

Date	Employee Signature	Employer Signature

a. Standards include organizations such as the American Society of Agricultural and Biological Engineers, American National Standards Institute, Canadian Standards Association, International Organization for Standardization, EN Standards, and/or others.

New in this Manual

The following changes have been made in this revision of the manual:

Description	Section
This is for a new product; first release of manual.	

TABLE OF CONTENTS

1. Introduction 7

2. Safety 9
2.1. General Safety Information 9
2.2. Assembly Safety 10
2.3. Operational Safety 10
2.4. Maintenance Safety 12
2.5. Hydraulic Safety 12
2.6. Safety Decals 12
2.6.1. Decal Installation/Replacement 12
2.6.2. Safety Decal Locations and Details 13

3. Assembly 15
3.1. Assembly Safety 15
3.2. Tools Required 15
3.3. Power Swing Components 16
3.4. Power Swing Assembly 18
3.4.1. Replace the Transition 18
3.5. Electric Drive Option 19
3.5.1. Install the Landing Gear (Electric) 19
3.5.2. Install and Connect the Receiver Box 21
3.6. Hydraulic Drive Option 25
3.6.1. Attach the Landing Gear to the Transition (Hydraulic) 25
3.6.2. Install and Connect the 2-Spool Valve 27

4. Operation 31
4.1. Pre-Operational Checklist 31
4.2. Electric Power Swing Operation 32
4.3. Hydraulic Drive 34
4.4. Hydraulic Power Swing Operation 35
4.5. Transporting 36

5. Maintenance & Storage 37
5.1. Maintenance Procedures 37
5.2. Storage Procedure 38

6. Appendix 39
6.1. Open/Closed-Center Valve Conversion 39
6.2. Power Swing Remote Transmitter Instructions 40
6.2.1. Programming Receivers 41

7. Hutchinson/Mayrath Warranty 43

1. Introduction

Thank you for purchasing a Hutchinson/Mayrath Landing Gear Power Swing. This equipment will allow safe and efficient operation when you read and follow all of the instructions contained in this manual. With proper care, your Landing Gear Power Swing will provide you with many years of trouble-free operation.

Keep this manual handy for frequent reference and to review with new personnel. A sign-off form is provided on the inside front cover for your convenience. If any information in this manual is not understood or if you need additional information, please contact your local distributor or dealer for assistance.

This manual should be regarded as part of the equipment. Suppliers of both new and second-hand equipment are advised to retain documentary evidence that this manual was provided with the equipment.

2. Safety

2.1. GENERAL SAFETY INFORMATION

The Safety Alert symbol identifies important safety messages on the product and in the manual. When you see this symbol, be alert to the possibility of personal injury or death. Follow the instructions in the safety messages.

Why is SAFETY important?

- Accidents disable and kill.
- Accidents cost.
- Accidents can be avoided.

SIGNAL WORDS: Note the use of the signal words **DANGER**, **WARNING**, **CAUTION**, and **NOTICE** with the safety messages. The appropriate signal word for each message has been selected using the definitions below as a guideline.

DANGER	
	Indicates an imminently hazardous situation that, if not avoided, will result in serious injury or death.

WARNING	
	Indicates a hazardous situation that, if not avoided, could result in serious injury or death.

CAUTION	
	Indicates a hazardous situation that, if not avoided, may result in minor or moderate injury.

NOTICE
Indicates a potentially hazardous situation that, if not avoided, may result in property damage.

YOU are responsible for the **SAFE** use and maintenance of your equipment. **YOU** must ensure that you and anyone else who is going to work around the equipment understands all procedures and related **SAFETY** information contained in this manual.

Remember, **YOU** are the key to safety. Good safety practices not only protect you, but also the people around you. Make these practices a working part of your safety program.

Important: *Below are general instructions that apply to all safety practices. Any instructions specific to a certain safety practice (e.g., Operational Safety), can be found in the appropriate section. Always read the complete instructional sections and not just these safety summaries before doing anything with the equipment.*

- It is the equipment owner, operator, and maintenance personnel's responsibility to read and understand **ALL** safety instructions, safety decals, and manuals and follow them when assembling, operating, or maintaining the equipment. All accidents can be avoided.
- Equipment owners must give instructions and review the information initially and annually with all personnel before allowing them to operate this product. Untrained users/operators expose themselves and bystanders to possible serious injury or death.
- Use this equipment for its intended purposes only.
- Do not modify the equipment in any way without written permission from the manufacturer. Unauthorized modification may impair the function and/or safety, and could affect the life of the equipment. Any unauthorized modification of the equipment voids the warranty.
- Do not allow any unauthorized person in the work area.

2.2. ASSEMBLY SAFETY

- Read and understand the assembly instructions to get to know the sub-assemblies and hardware that make up the equipment before proceeding to assemble the product.
- Do not take chances with safety. The components are large, heavy, and can be hard to handle. Always use the proper tools, stands, jacks, and hoists for the job.
- Always have two or more people assembling the equipment. Because of the weight, do not attempt assembly alone.

2.3. OPERATIONAL SAFETY

- Do not operate with any of the safety guards removed.
- Keep body, hair, and clothing away from moving parts. Stay away from intake during operation.
- Do not stand in the path of the Power Swing when it is moving.

Refer to your auger manual for full safety instructions.

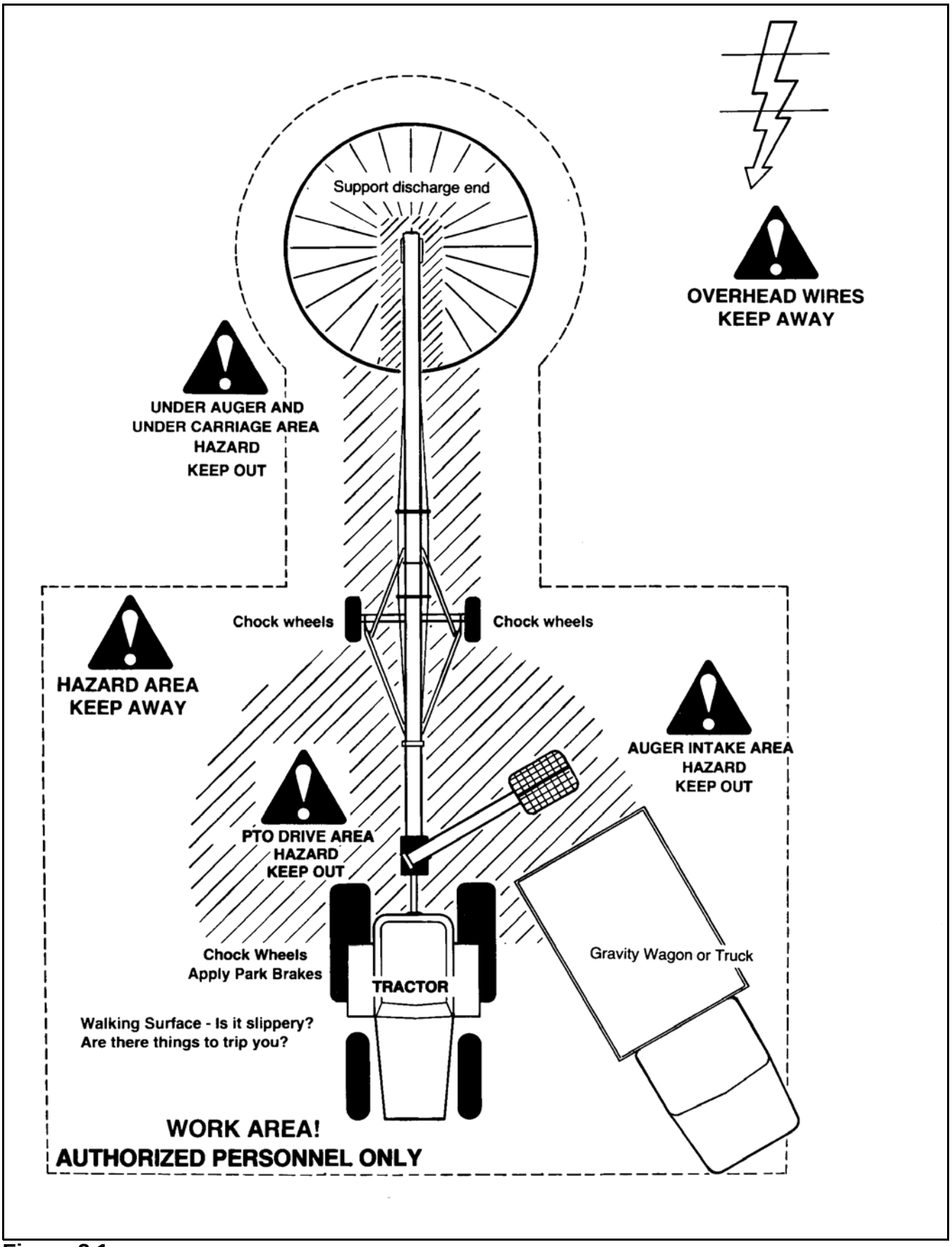
Support discharge end
OVERHEAD WIRES
KEEP AWAY
UNDER AUGER AND
UNDER CARRIAGE AREA
HAZARD
KEEP OUT
Chock wheels
Chock wheels
HAZARD AREA
KEEP AWAY
AUGER INTAKE AREA
HAZARD
KEEP OUT
PTO DRIVE AREA
HAZARD
KEEP OUT
Chock Wheels
Apply Park Brakes
TRACTOR
Gravity Wagon or Truck
Walking Surface - Is it slippery?
Are there things to trip you?
WORK AREA!
AUTHORIZED PERSONNEL ONLY

Figure 2.1

2.4. MAINTENANCE SAFETY

- Shut down and lock out all power before attempting maintenance of any kind. **If applicable**, disconnect PTO driveline from tractor or hydraulic hoses on units with hydraulic drive hoppers.
- After maintenance is complete, replace and secure all safety guards and safety devices, and if applicable, service doors and cleanout covers.
- Support auger tube before attempting maintenance on the undercarriage assembly. Auger should be in full down position for maintenance.
- Use only genuine Hutchinson/Mayrath replacement parts or equivalent. Replacement parts such as intake guards, pulley guards, PTO driveline shields, winches, and lift cables must meet ASABE standards or serious injury may result. Use of unauthorized parts will void warranty. If in doubt, contact Hutchinson/Mayrath or your Hutchinson/Mayrath dealer.
- Do not modify any auger components without authorization from Hutchinson/Mayrath. Modification can be dangerous and result in serious injuries.

2.5. HYDRAULIC SAFETY

- Clean connections before attaching to tractor.
- Inspect hydraulic fittings and hoses for damage on a daily basis. Repair if damaged.
- Do not disconnect hydraulic couplers when hydraulic system is pressurized.
- Wear proper hand and face protection when searching for hydraulic leaks. Escaping fluid under pressure can penetrate the skin, causing infection and/or toxic reaction. In case of accident, see a doctor immediately.
- Repair all leaks and breaks in hydraulic valve or hose immediately. Rupture could cause damage and/or personal injury.

2.6. SAFETY DECALS

- Keep safety decals clean and legible at all times.
- Replace safety decals that are missing or have become illegible. See decal location figures that follow.
- Replaced parts must display the same decal(s) as the original part.
- Replacement safety decals are available **free of charge** from your distributor, dealer, or factory.

2.6.1. DECAL INSTALLATION/REPLACEMENT

1. Decal area must be clean and dry, with a temperature above 50°F (10°C).
2. Decide on the exact position before you remove the backing paper.
3. Align the decal over the specified area and carefully press the small portion with the exposed sticky backing in place.
4. Slowly peel back the remaining paper and carefully smooth the remaining portion of the decal in place.

5. Small air pockets can be pierced with a pin and smoothed out using the sign backing paper.

2.6.2. SAFETY DECAL LOCATIONS AND DETAILS

Replicas of the safety decals that are attached to the equipment and their messages are shown in the figure(s) that follow. Safe operation of the equipment requires that you familiarize yourself with the various safety decals and the areas or particular functions that the decals apply to, as well as the safety precautions that must be taken to avoid serious injury, death, or damage.

***** *Hutchinson/Mayrath reserves the right to update safety decals without notice. Safety decals may not be exactly as shown.*

Figure 2.2 Safety Decal Location (Hydraulic model)

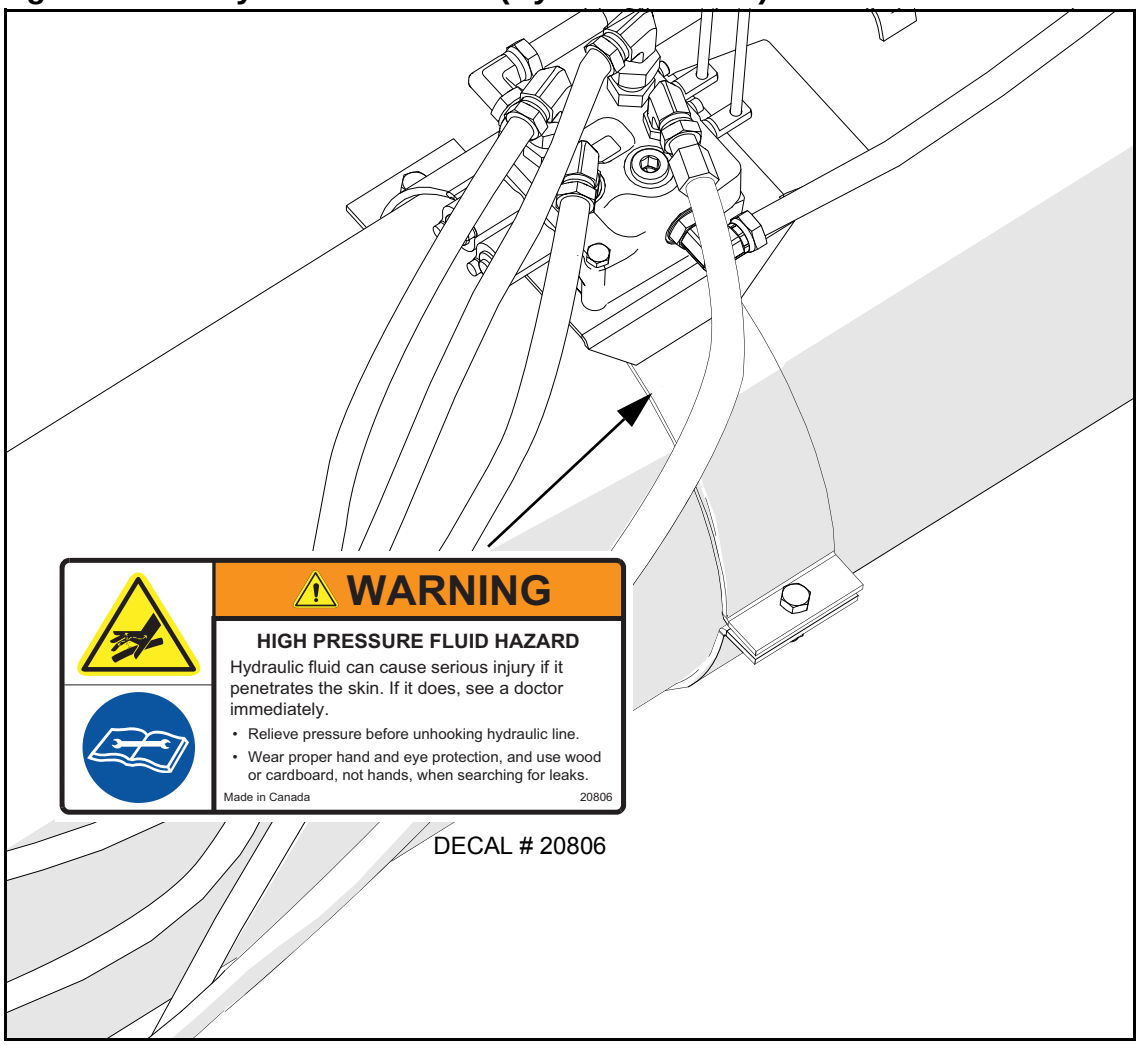

3. Assembly

WARNING *Before continuing, ensure you have read and understand the relevant information in the safety section. Safety information is provided to help prevent serious injury, death, or property damage.*

Before starting assembly of your new Power Swing, please read the following instructions carefully and familiarize yourself with all the sub-assemblies and hardware. Arrange all parts for easy access during assembly. Assemble equipment in an open area with a level surface.

3.1. Assembly Safety

WARNING

- Do not take chances with safety. The components can be large, heavy, and hard to handle. Always use the proper tools, rated lifting equipment, and lifting points for the job.
- Carry out assembly in a large open area with a level surface.
- Always have two or more people assembling the equipment.
- Make sure you have sufficient lighting for the work area.
- Tighten all fasteners according to their specifications. Do not replace or substitute bolts, nuts, or other hardware that is of lesser quality than the hardware supplied by the manufacturer.

3.2. TOOLS REQUIRED

- 1/2” drive impact wrench (recommended)
- 1/2”, 5/8”, 3/4” and 1-1/8” sockets, for 1/2” drive
- 1/2”, 5/8”, 11/16”, 3/4”, 7/8”, 15/16”, 1", 1-1/16” and 1-1/8” flat wrenches

3.3. POWER SWING COMPONENTS

Figure 3.1 Electric Power Swing Components

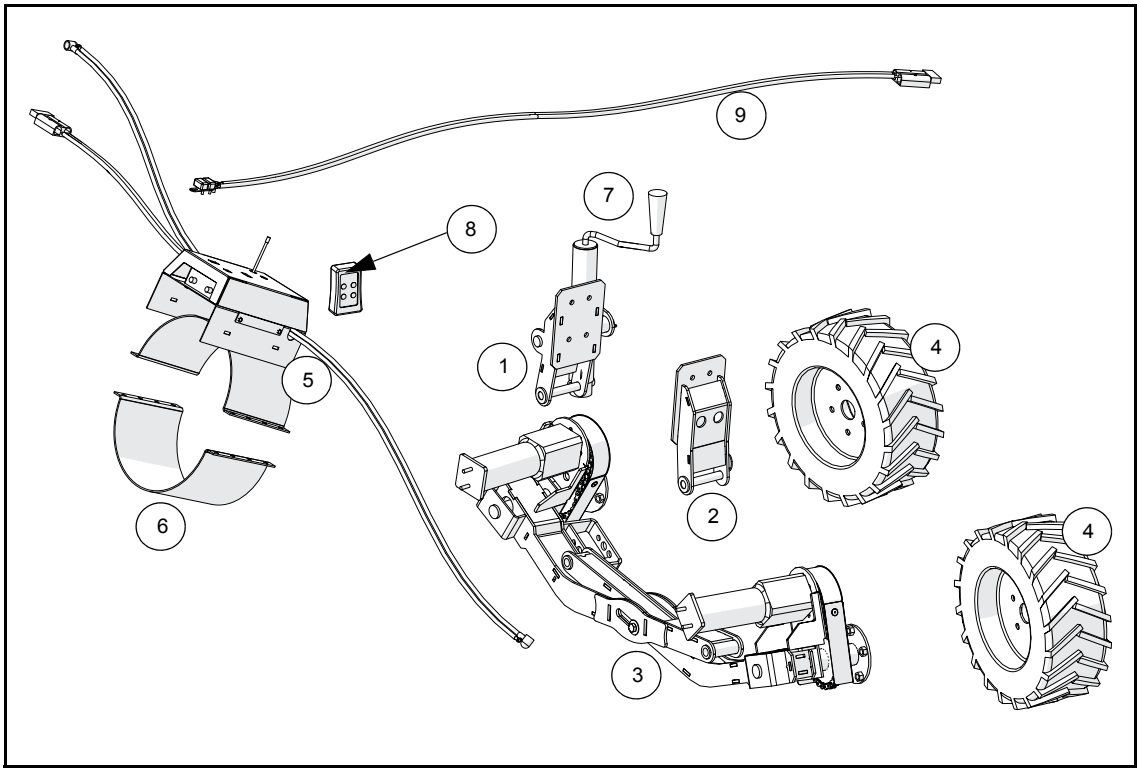

Table 3.1. Electric Power Swing Components

Ref	Part Number	Part Description
1	10-22553	Manual jack attach bracket
2	10-22554	Right-side attach bracket
3	10-22563	Landing gear assembly (electric)
4	10-20137	Landing gear wheels
5	10-20289 (100)	Receiver top-clamp assembly
	10-20158 (130)	
6	10-27235 (100)	Hitch ring half clamp
	10-27455 (130)	
7	10-22555	Manual jack
8	10-20134	Transmitter
9	10-20169	Wire harness (battery-to-quick-connect)

Figure 3.2 Hydraulic Power Swing Components

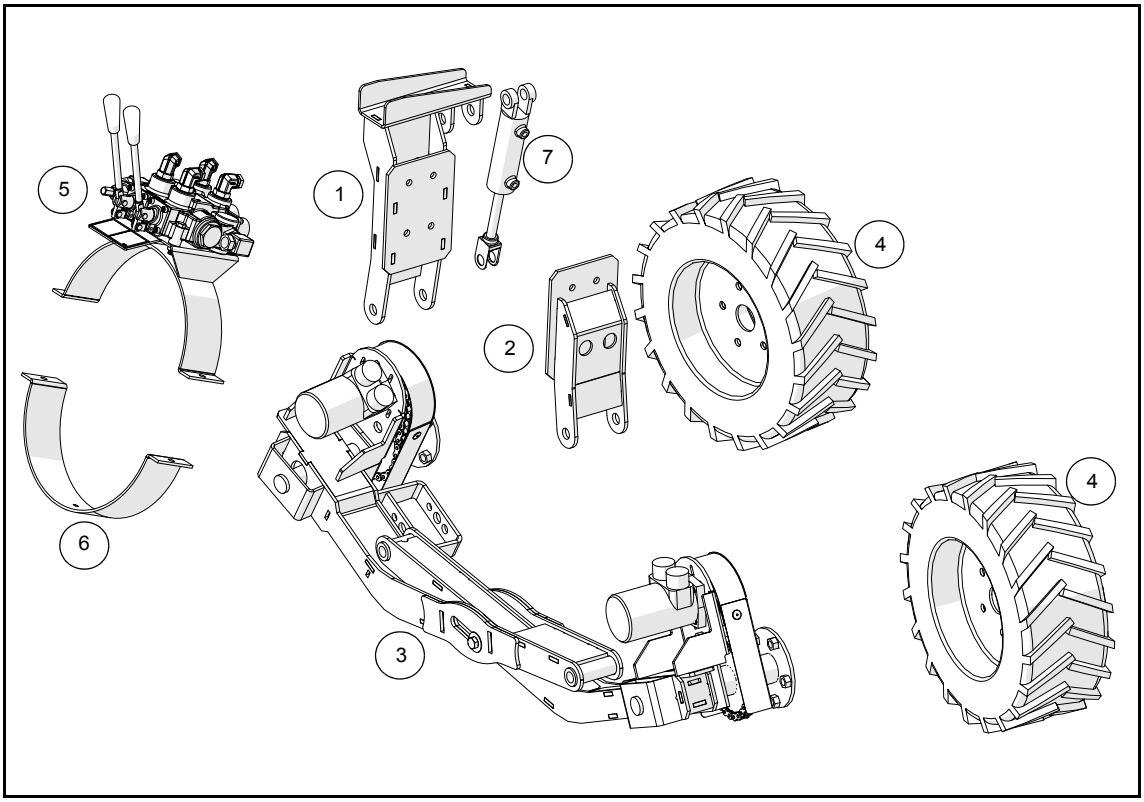

Table 3.2. Hydraulic Power Swing Components

Ref	Part Number	Part Description
1	10-22559	Hydraulic cylinder attach bracket
2	10-22554	Right-side attach bracket
3	10-22560	Landing gear assembly (hydraulic)
4	10-20137	Landing gear wheels
5	10-23082 (100)	Hydraulic control valve assembly
	10-22547 (130)	
6	10-19801 (100)	Half clamp
	10-18987 (130)	
7	10-22161	Hydraulic cylinder
(not shown)	10-29368	1/2” x 247" Hydraulic hose
(not shown)	10-29414	3/8” x 46" Hydraulic hose
(not shown)	10-28229	3/8” x 50" Hydraulic hose
(not shown)	10-22744	3/8" x 80" Hydraulic hose

3.4. POWER SWING ASSEMBLY

3.4.1. REPLACE THE TRANSITION

Note: *This procedure applies only to augers with transitions that do not include a welded bracket on each side for landing gear attachment.*

1. Remove the hopper and transition from the swing tube.
2. Remove the existing transition from hopper.
3. Remove the two cable attach brackets from the existing transition and mount to the new transition using the six existing 7/16” x 1-1/4” bolts and locknuts.
4. Attach the new transition (that includes welded brackets) to the hopper using the two previously-removed 5/8” x 1-1/2” bolts and locknuts.
   DO NOT OVER-TIGHTEN: tighten to a slightly loose fit only as these bolts act as pivot points.
5. Open the service door on the transition, then bring the tube and transition together guiding the flight shaft into the u-joint.
6. Secure the transition to the swing tube using the twelve existing 7/16” x 1-1/4” bolts and locknuts.
7. Tighten set screws on the u-joint, then close and secure the service door.

Table 3.3. Replacing the Transition

Ref	Part Number	Part Description
1	10-21686 (100)	Transition assembly
	10-29977 (130)	
2A	10-19590	5/8” x 1-1/2” bolt
2B	10-19600	5/8” locknut

Figure 3.3 Replacing the Transition

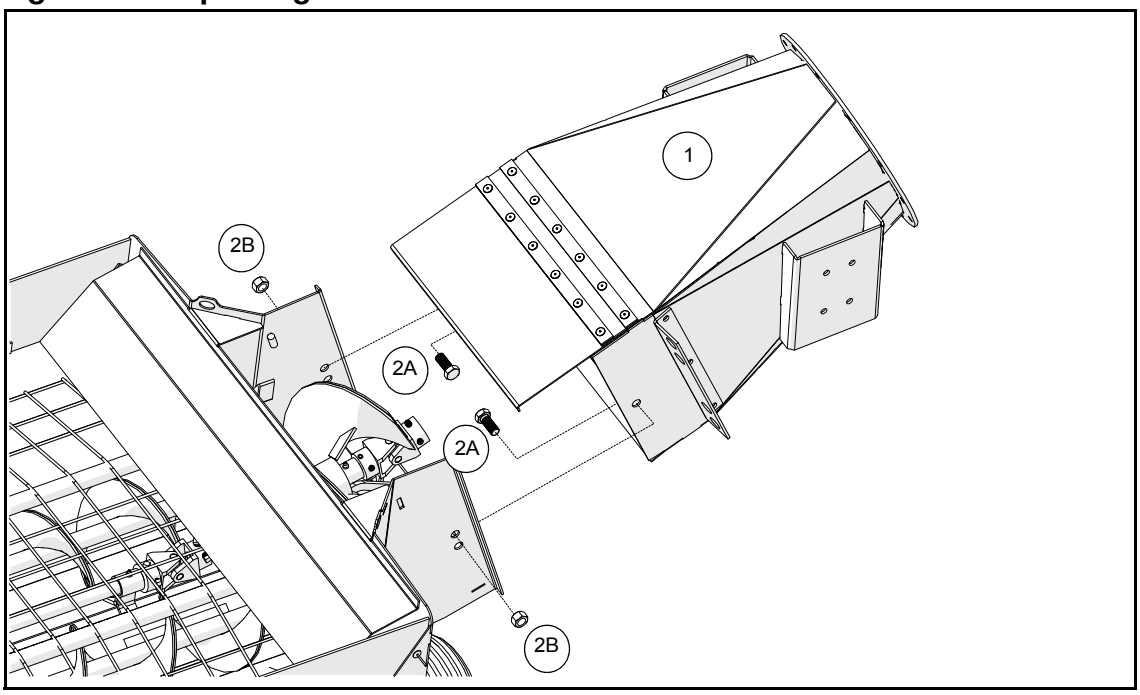

3.5. ELECTRIC DRIVE OPTION

3.5.1. INSTALL THE LANDING GEAR (ELECTRIC)

1. Fasten the right-side attach bracket to the right-side transition bracket using four 7/16" x 1-1/4" bolts and locknuts.
2. Fasten the jack attach bracket to the left-side transition bracket using four 7/16" x 1-1/4" bolts and locknuts.
3. Slide the upper manual jack attachment onto the manual jack attach pin, and secure using a lynch pin.
4. Connect the landing gear assembly to the attach brackets:
   a. At the right-side attach bracket, use a landing gear pin and a lynch pin.
   b. At the jack-attach bracket, use a landing gear pin, three 3/4” rim washers per side (as spacers), and a lynch pin.
5. Align the bottom manual jack attachment with the 5/8” hole in the landing gear attachment point, and secure using a 5/8” x 4” bolt and 5/8” locknut.
6. Bolt both wheels to the landing gear power swing assembly using five wheel bolts per wheel. Tighten bolts securely.

Table 3.4. Attaching the Landing Gear to the Transition (Electric)

Ref	Part Number	Part Description
1	10-22553	Jack attach bracket
2	10-22554	Right-side attach bracket
3	10-22555	Manual jack
4a 4b	10-18698 10-17593	7/16” x 1-1/4” bolts 7/16” locknuts
5	10-22168	Landing gear pins
6a 6b	10-27815 10-19600	5/8” x 4” bolt 5/8” locknut
7	10-19979	3/4” rim washers
8	10-29998	Lynch pins
9	10-20137	Wheel (tire on rims)
10	10-20565	Wheel bolts

Figure 3.4 Attaching the Landing Gear to the Transition (Electric)

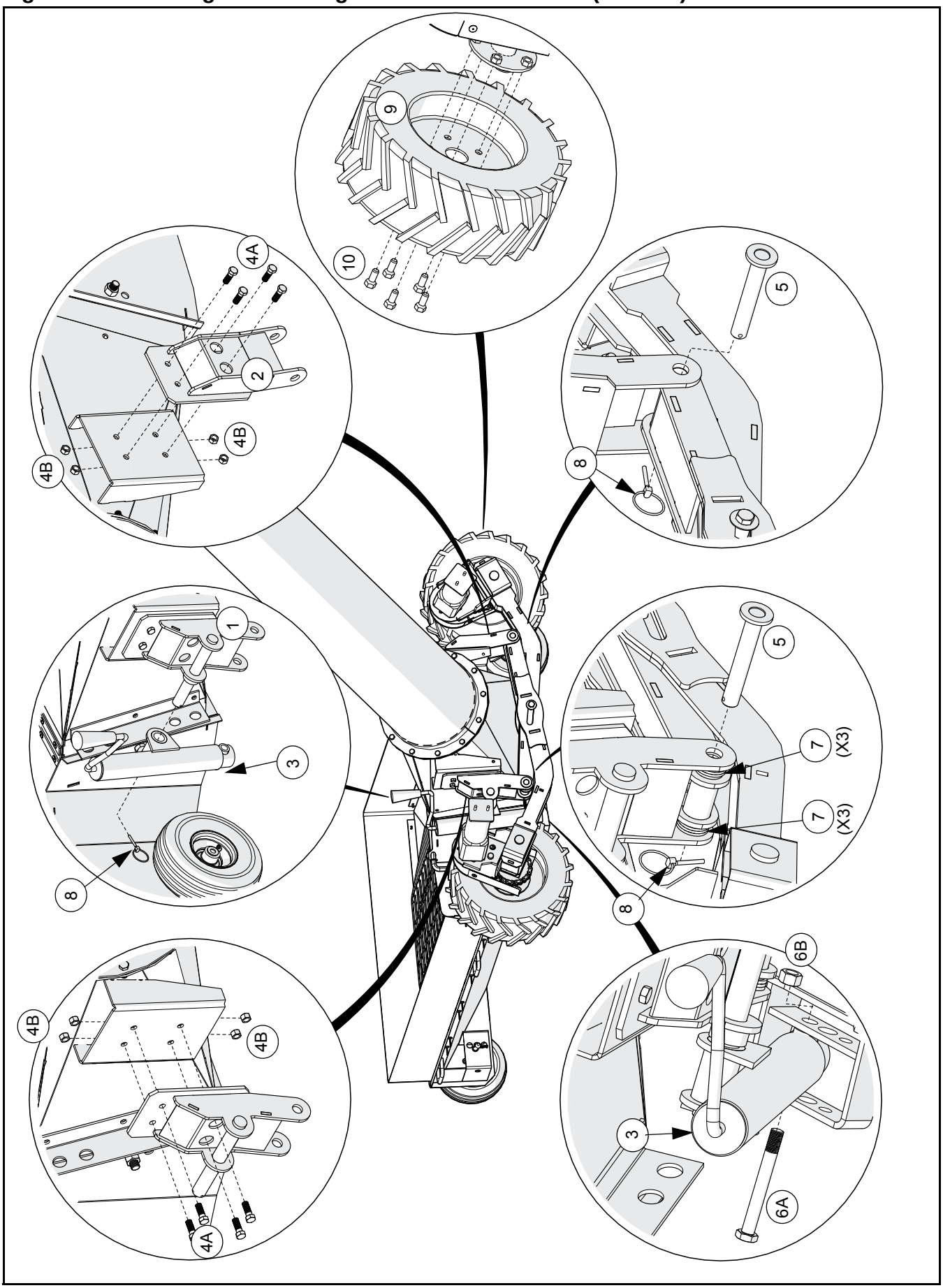

3.5.2. INSTALL AND CONNECT THE RECEIVER BOX

1. Position the receiver top clamp assembly approximately 24" from the transition attach plate and secure using eight 7/16” x 1-1/4” bolts and locknuts. Tighten both sides securely.
2. Remove cover from the receiver box and top clamp assembly. This means removing the four sheet metal screws located on the sides of the cover.
3. Remove radio antenna and transmitter from the crate (it will be in a separate bag). Screw antenna into the socket on the clamp-base.
4. Replace cover, making sure that the antenna fits through the top hole, as shown in Figure 3.5. Replace sheet metal screws, and tighten securely.

Figure 3.5 Install the Receiver Box

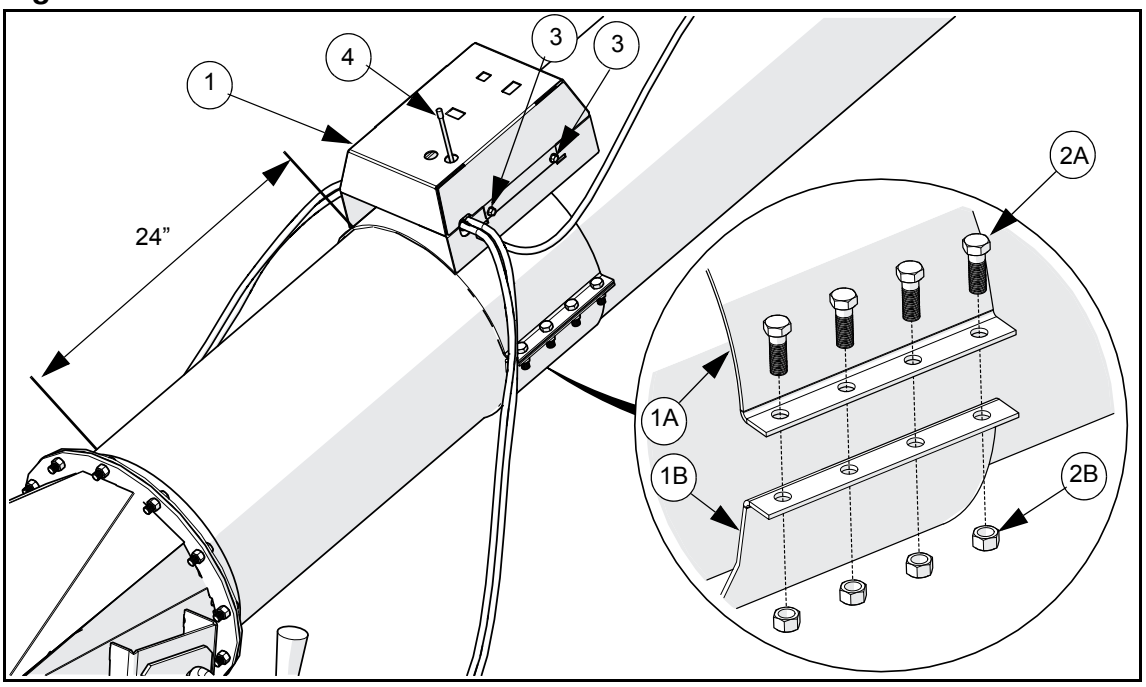

Table 3.5. Installing and Connecting the Receiver Box

Ref	Part Number	Part Description
1a	10-20289 (100)	Receiver top clamp assembly
	10-20158 (130)	
1b	10-27235 (100)	Hitch ring half clamp
	10-27455 (130)	
2a	10-18698	7/16” x 1-1/4” bolts
2b	10-17593	7/16” locknuts
3	10-19274	Sheet metal screws (#14 x 5/8”)
4	10-20524	Antenna
5	10-20268	5/8” x 1/2” insulated clamp
6a	9900800	1/4” x 3/4” bolt
6b	10-28449	1/4” locknut

5. The electrical cables are pre-installed to the receiver box. Uncoil the two shorter (4') electrical cables and identify the positive and negative wires. The positive wire has a red boot and printing on it.
6. Attach the wires to the motor terminals on the Power Swing. The positive wire with the red boot connects to the positive (+) terminal on the electric motor. To connect:
   a. Unscrew the nut on the motor terminal.
   b. Place the wire on, and then replace the nut.
   c. Tighten securely.
   d. Repeat the same steps for the negative wire and terminal.
7. Route the long electrical cable up the swing tube and secure it using an insulated clamp, a 1/4" x 3/4" bolt, and a 1/4" locknut.
8. Uncoil the tractor wire harness.
9. Connect the end opposite the quick-connect to the battery and chassis ground using the 5/16" lugged connectors supplied with the kit:
   a. Attach the positive wire directly to the positive terminal on the tractor battery (the positive wire has a circuit breaker on it).
   b. Attach the negative wire to a tractor chassis ground point (assuming that the tractor battery is also grounded to the chassis).

NOTICE

If these electrical cables are not hooked up properly the electric controller will be damaged.

10. Attach the receiver cable quick connect to the tractor wire harness quick connect.

Note: *Ensure that both tires are turning in the same direction. If they are not, reverse the wires on one of the motors.*

Figure 3.6 Connecting the Receiver Box

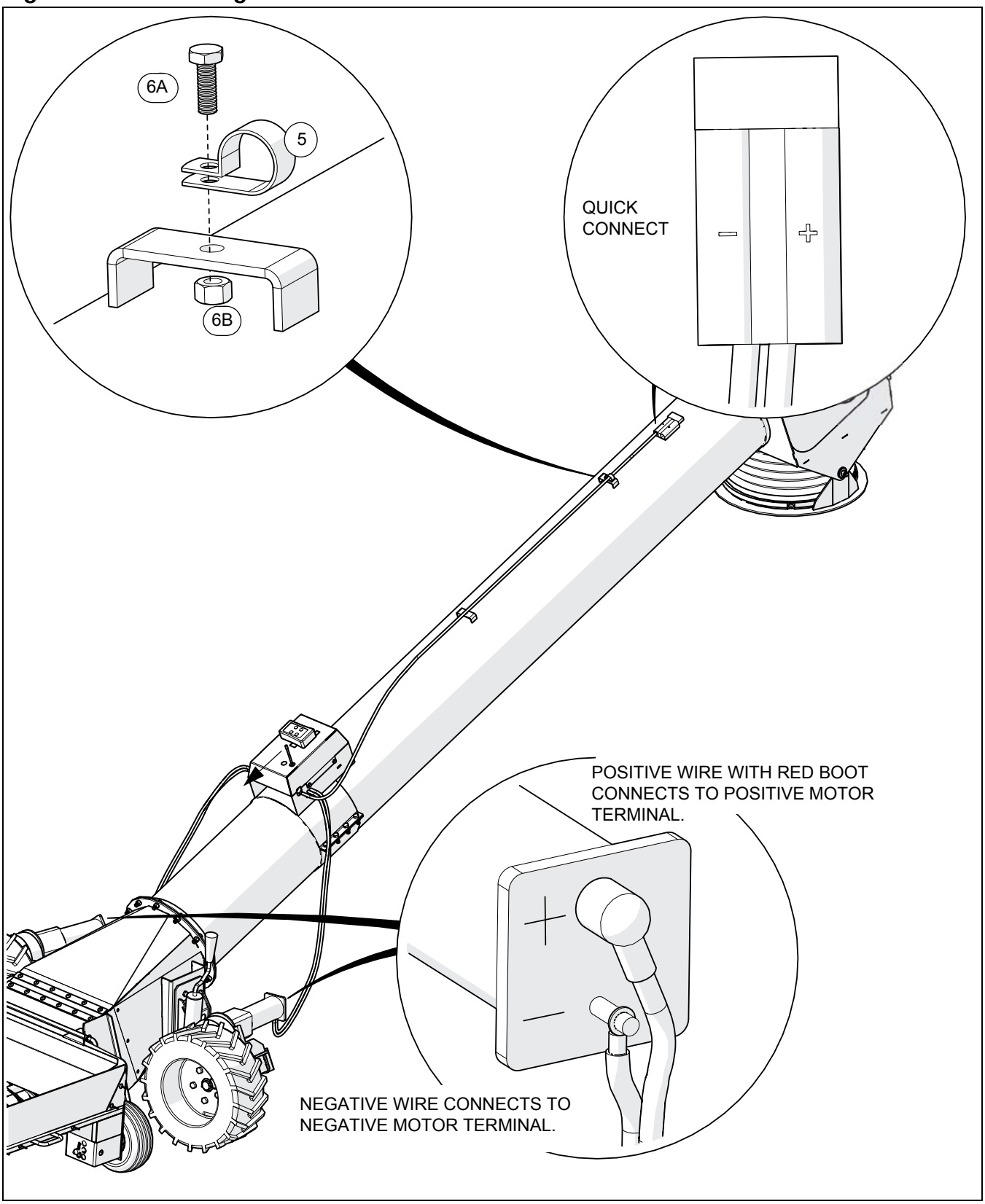

Figure 3.7 Power Swing Wiring Diagram

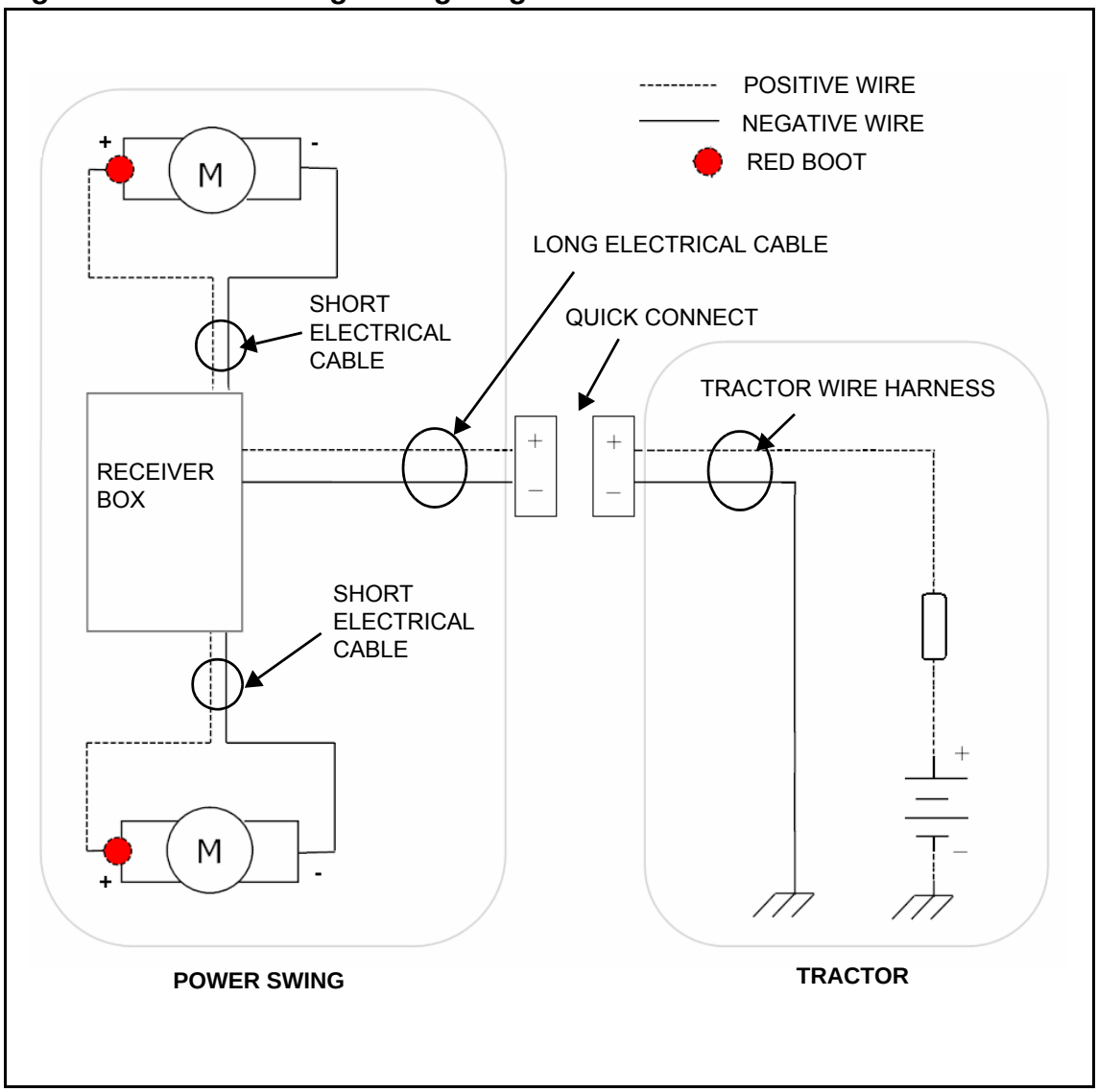

3.6. HYDRAULIC DRIVE OPTION

3.6.1. ATTACH THE LANDING GEAR TO THE TRANSITION (HYDRAULIC)

1. Fasten the right-side attach bracket to the right-side transition bracket using four 7/16” x 1-1/4” bolts and locknuts.
2. Fasten the hydraulic cylinder attach bracket to the left-side transition bracket using four 7/16” x 1-1/4” bolts and locknuts.
3. Connect the landing gear power swing assembly to the attach brackets on the transition:
   a. At the right-hand attach brackets, use a landing gear pin and a lynch pin.
   b. At the hydraulic cylinder attach bracket, use a landing gear pin, three 3/4” rim washers per side (as spacers), and a lynch pin.
4. Align the cap end of the hydraulic cylinder with the mounting flange on the hydraulic cylinder attach bracket, and the rod end with the landing gear cylinder mount flange. Secure the cylinder using a 3/4” x 3-1/2” bolt and locknut on the cap end, and a 3/4” pin, a spacer bushing, two 3/4” washers, and a lynch pin on the rod end.
5. Bolt both wheels to the landing gear power swing assembly using five wheel bolts per wheel. Tighten bolts securely.

Table 3.6. Attaching Landing Gear to the Transition (Hydraulic)

Ref	Part Number	Part Description
1	10-22559	Hydraulic cylinder attach bracket
2	10-22554	Right-side attach bracket
3	10-22161	Hydraulic cylinder
4A 4B	10-18698 10-17593	7/16” x 1-1/4” bolts 7/16” locknuts
5	10-22168	Landing gear pins
6A 6B	10-20398 10-19601	3/4” x 3-1/2” bolt 3/4” locknut
7	10-19979	3/4” rim washers
8	10-22577	3/4” pin
9	10-22578	Spacer bushing
10	10-19979	3/4” Washers
11	10-29998	Lynch pins
12	10-20137	Wheel (tire on rim)
13	10-20565	Wheel bolts
14	10-18155	Cotter pin

Figure 3.8 Attaching the Landing Gear to the Transition (Hydraulic)

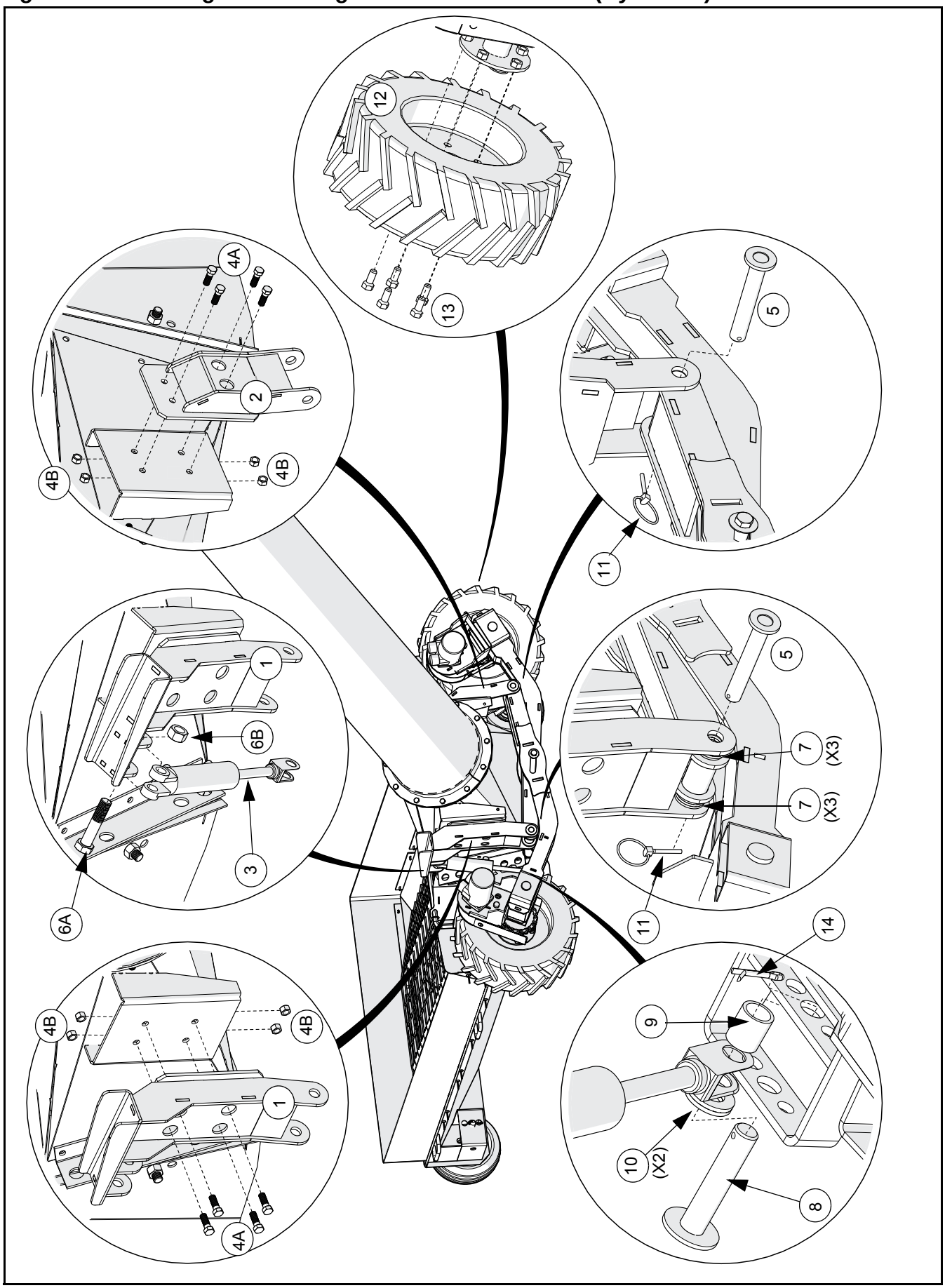

3.6.2. INSTALL AND CONNECT THE 2-SPOOL VALVE

Note: *The 2-Spool hydraulic control valve can be converted between closed center and open center. See “Open/Closed-Center Valve Conversion” on page 39. To determine whether your hydraulic system is an open system or a closed system, check your tractor manual.*

1. Position the 2-spool valve assembly at a 20° angle away from the main auger tube and approximately 24” from the transition attach plate. Secure using two 7/16” x 1-1/4” bolts and locknuts.
2. Install two elbow fittings into the power swing hydraulic cylinder ports. Connect two hydraulic hoses between the 2-spool valve and the power swing hydraulic cylinder.
3. Install two 45° fittings into the left power swing hydraulic motor ports. Connect one hydraulic hose between the 2-spool valve and the left power swing hydraulic motor.
4. Install two 45° fittings into the right power swing hydraulic motor ports. Connect one hydraulic hose between the 2-spool valve and the right power swing hydraulic motor.
5. Connect one hydraulic hose between the two power swing hydraulic motors.
6. Secure the two hoses from the right power swing hydraulic motor to the transition using four line blocks and two 5/16" x 2-1/2" bolts, flat washers and locknuts.
7. Connect the hydraulic supply and return hoses to the 2-spool valve and run the hoses up the swing tube to the tractor. Secure hoses to the swing tube using two line blocks, a 5/16” x 2-1/2” bolt, flat washer, and locknut.
8. Install 1/2” pioneer couplers onto the other end of the hydraulic supply and return hoses.

Table 3.7 Installing and Connecting the 2-Spool Valve

Item	Description	Part Number	QTY
1	1/2” x 247” Hydraulic Hose (Supply)	10-29368	1
2	1/2” x 247” Hydraulic Hose (Return)	10-29368	1
3	3/8” x 46” Hydraulic Hose (Power Swing Motor)	10-29414	1
4	3/8” x 80” Hydraulic Hose (Power Swing Motor)	10-22744	1
5	3/8” x 46” Hydraulic Hose (Power Swing Cylinder)	10-29414	1
6	3/8” x 50” Hydraulic Hose (Power Swing Cylinder)	10-28229	1
7	Steel Elbow 6 MORB x 3/8 NSPM	10-22191	2
8	Adapter, 45 Deg, #10 MORB x #6 FNPSM	10-22556	4
9	Hydraulic valve assembly and half-clamp (top)	10-23082 (100)	1
		10-22547 (130)	
	Half-clamp (bottom)	10-19801(100)	1
		10-18987 (130)	
10a	7/16” x 1-1/4” bolt	10-18698	2
10b	7/16” locknut	10-17593	2
11a	5/16” x 2-1/2” bolt	10-17631	3
11b	5/16” flat washer	10-27336	3
11c	5/16” locknut	10-19980	3
12	3/8" X 50" Hydraulic Hose	10-28229	1

Figure 3.9 Installing and Connecting the 2-Spool Valve

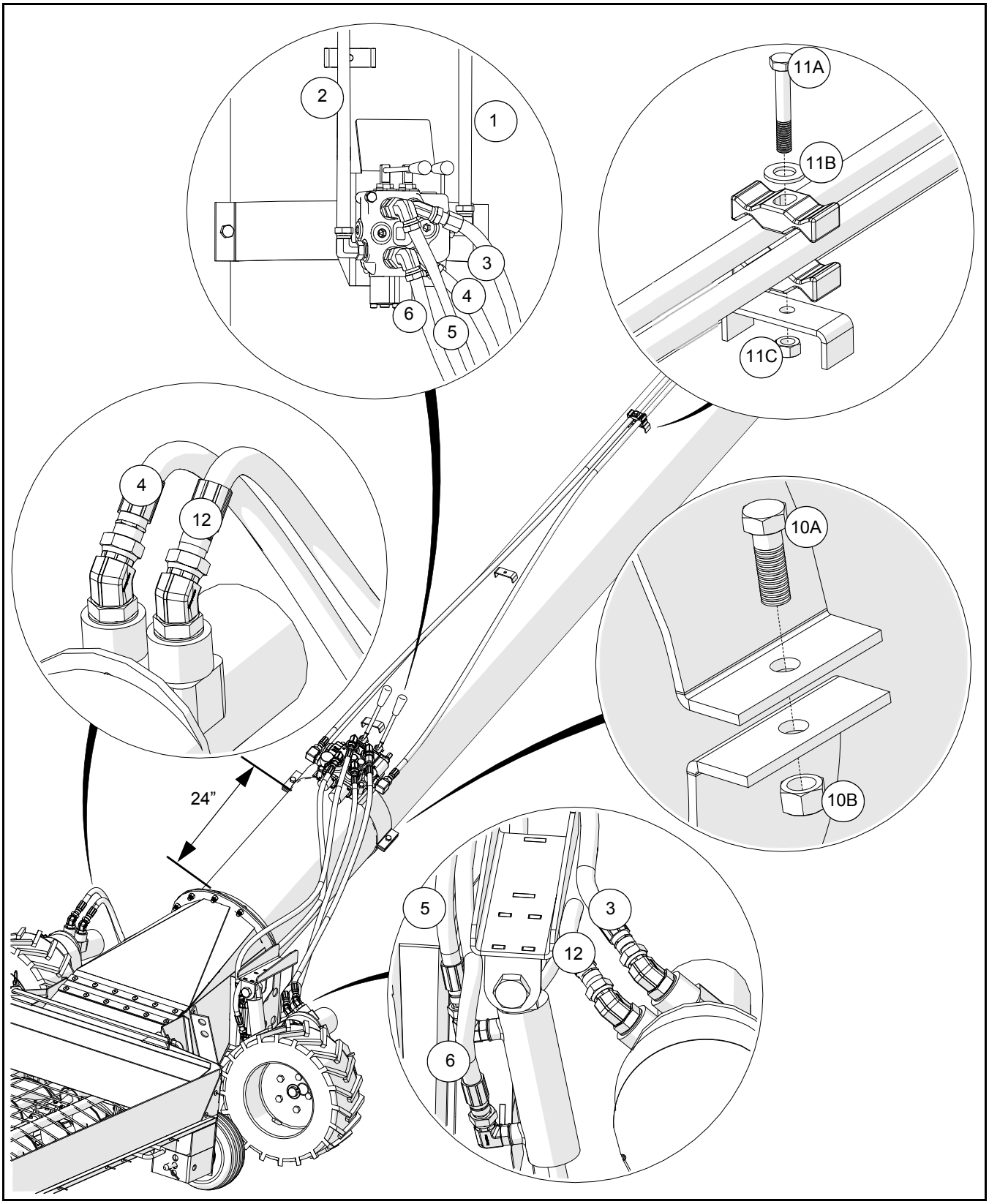

Figure 3.10 Hydraulic Motor Hose Connection Detail

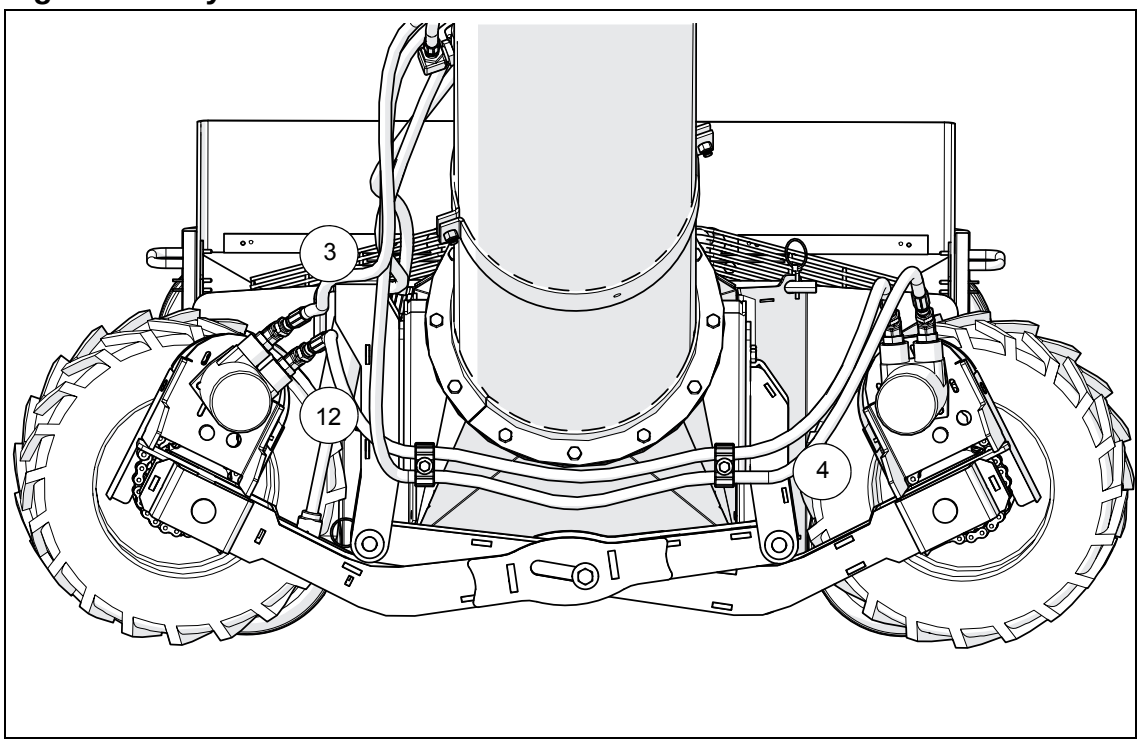

4. Operation

WARNING *Before continuing, ensure you have read and understand the relevant information in the safety section. Safety information is provided to help prevent serious injury, death, or property damage.*

Operators must observe safety procedures at all times and follow the pre-operational checklist before each start-up.

4.1. PRE-OPERATIONAL CHECKLIST

Before operating Power Swing each time, the operator must confirm the following:

- All fasteners are secure as per assembly instructions.
- Hydraulic hoses are in good condition.
- Hydraulic connections are in place and secure.
- Proper maintenance has been performed.
- Guards are in place and secure.

WARNING	
	High Pressure Fluid Hazard Hydraulic fluid can cause serious injury if it penetrates the skin. If this occurs, see a doctor immediately. Relieve pressure before disconnecting hydraulic line. Wear proper hand and eye protection, and use wood or cardboard, not hands, when searching for leaks. Keep all hoses and other components in good repair

4.2. ELECTRIC POWER SWING OPERATION

Note: *Remotes will be programmed from the factory—to reprogram your remote (or to add additional remotes, please see the Appendix.*

Important: *Registering more than one remote transmitter to a single Power Swing is acceptable but registering one remote transmitter to multiple Power Swings is not recommended.*

1. On the high end of the Power Swing remote receiver box, flip the power switch to the ON position (see Figure 4.1).

Figure 4.1 Power Swing Receiver Box

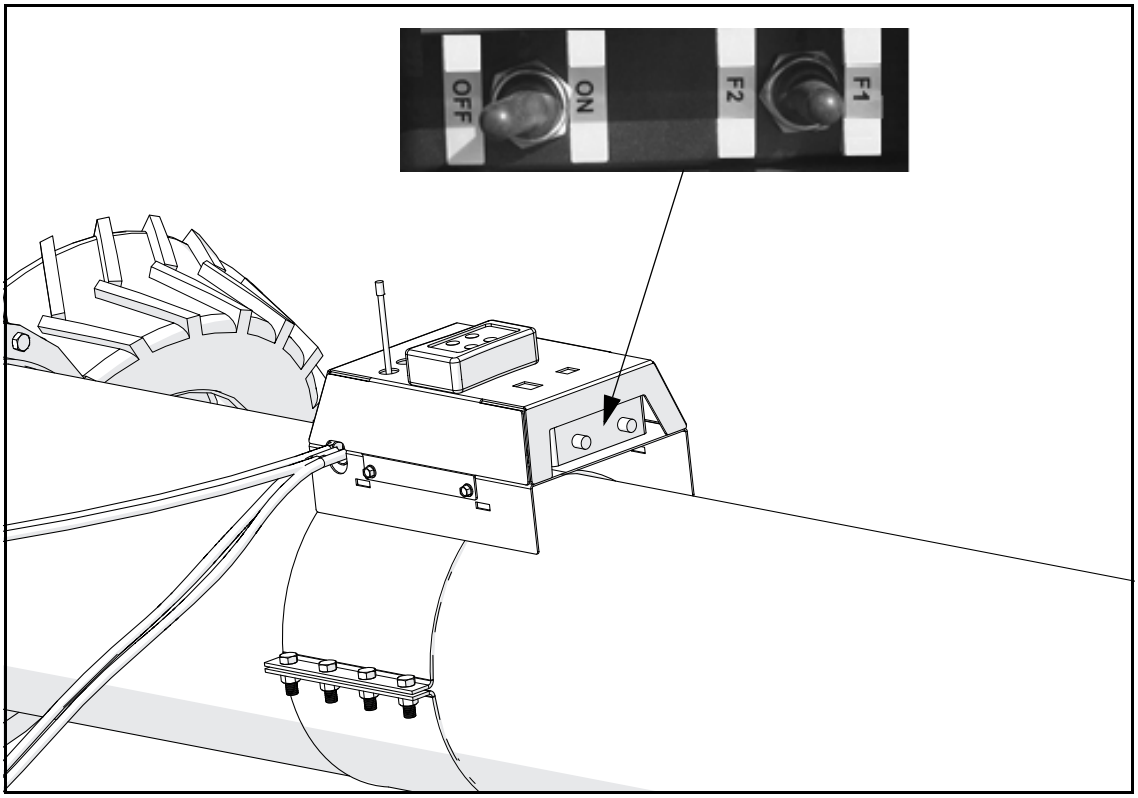

2. For manual operation:
   a. Using the direction switch, move the switch in the desired direction of travel (either F1 or F2 in Figure 4.1).
   b. Once finished moving the hopper, release the switch to stop operation (it should return to the neutral position).
3. For remote operation:
   a. Push the green button (no symbol) to turn the remote ON (see Figure 4.2).
   b. Push the yellow directional buttons (marked with arrows) located below the ON/OFF buttons in the direction you want the hopper to move (Figure 4.2).
   c. If this does not work:
      i. Push the red button (with an exclamation mark) to turn the remote OFF.
      ii. Then push the green button (no symbol) to turn the remote back ON.

iii. Operate the remote as outlined above, using the two yellow directional buttons (marked with arrows) located at the bottom of the remote to move the hopper as desired.

Figure 4.2 Remote Transmitter

4. Use the manual jack on the power swing to raise or lower the hopper.

4.3. HYDRAULIC DRIVE

Note: *If the installed couplers do not fit your tractor's hydraulic pressure and return ports, refer to your tractor specifications or contact your dealer regarding coupler compatibility.*

1. Ensure that the hydraulic lines are properly connected and secure.

CAUTION	
	Do not disconnect coupler under pressure. Relieve pressure and then disconnect.

2. Keep hydraulic lines away from moving parts.
3. Do not connect or disconnect the hydraulic couplers when under pressure. Consult the tractor manual for the correct procedure.

Important: *Because the Power Swing has a control valve independent of the tractor, the tractor hydraulic control has to be engaged when using the Power Swing.*

CAUTION	
	Do not start equipment until area is clear of all untrained personnel.

4.4. HYDRAULIC POWER SWING OPERATION

1. Ensure that the valve is in the proper configuration (open-center or closed center).
2. Adjust the tractor's output flow using the flow control lever to achieve 4-5 gpm. This will ensure a controlled speed.
3. Put the lever that controls your tractor hydraulics in the detent position where the hydraulics stay engaged all the time.
4. In order to activate the Power Swing:
   a. Push the right-side control lever on the Power Swing valve control assembly to raise the hopper.
   b. Use the left-side control lever to move the hopper in the desired direction of travel.
   c. Once finished moving the hopper to the desired position, use the right side control lever to lower the hopper.

Figure 4.3 Control Valve Lever Functions

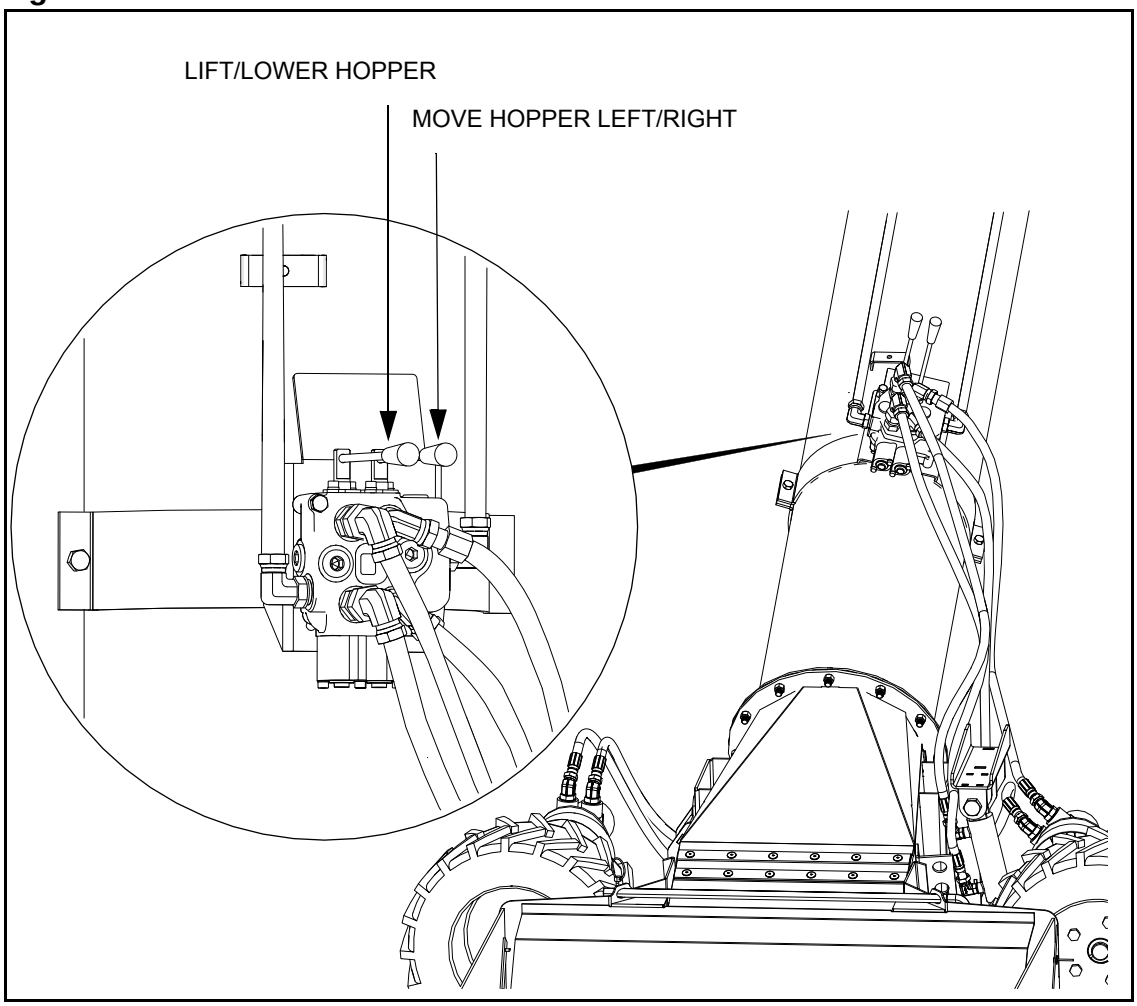

4.5. TRANSPORTING

When transporting the auger, be sure to use the provided safety chain to lock the swing hopper to the bracket. Since the Power Swing adds more weight to the swing hopper, extra caution is needed when transporting your auger.

NOTICE

Hopper must be in transport position when lowering, raising, or moving auger.

Important: *The INTAKE FEED side of swing hopper must face main auger when in the transport position. Do not operate auger with hopper in transport position. This will damage the u-joint.*

Important: *Read the auger operation manual for further hydraulic safety instructions.*

5. Maintenance & Storage

5.1. MAINTENANCE PROCEDURES

Please follow the guidelines below.

Area	Maintenance Procedures	Frequency
General	While auger is in use, observe the pre-operational checklist on page 31 of the Operation section.	Daily
General	Check all operating, lifting, and transport components. Replace damaged or worn parts before using auger. For replacement instructions, see the Assembly section of this manual.	Regularly
Drive Chain	Keep drive chain tension adjusted to about 1/4” deflection by loosening the 4 bolts on the hydraulic or electric motor mount, then re-tighten. Perform this for both motor drive chains. • Oil chain frequently enough to keep a light film of oil on it. • Ensure that safety guards are in place and secure before operation.	Frequently
Hydraulic Hose	Check hose and hose couplers for leaks, wear, or damage. Replace if necessary. • Use cardboard when searching for hydraulic leaks.	Frequently
Remote Transmitter	Ensure that a 9V battery is installed in the back of the remote transmitter. To install: • Remove the plastic from around the battery. • Then place the battery into the back of the remote control. For proper replacement procedure, refer to Figure 6.2 in the Appendix section of this manual.	Before initial operation, or as required
Tire Pressure	Check with a pressure gauge. It is recommended that pressure be maintained at a maximum of 28 psi (193 kPa).	Monthly, or as required

5.2. STORAGE PROCEDURE

TO PROTECT POWER SWING IN STORAGE DURING THE OFF-SEASON:

1. Raise wheels to full up position.
2. Clean out axle assembly and lubricate chains with a light coating of oil.
3. Inspect unit for damage and note any repairs required. Order replacement parts from your dealer.
4. Check tire pressure and inflate to 24 psi (165 kPa).

Important: *Use only genuine Hutchinson/Mayrath replacement parts or equivalent. Replacement parts MUST meet ASABE standards or serious injuries may result. Use of unauthorized parts will void warranty. If in doubt, contact Hutchinson/Mayrath or your local Hutchinson/Mayrath dealer. Do not modify any components of the Power Swing.*

TO PREPARE FOR USE AFTER STORAGE:

1. Check tire pressure and inflate according to recommendation on side wall if necessary.
2. Keep decals clean. Replace any decal that is damaged or not clearly visible.
3. Conduct general maintenance procedure before using auger.

6. Appendix

6.1. OPEN/CLOSED-CENTER VALVE CONVERSION

Note: *The standard configuration for the control valve is closed-center. The closed-center plug is pre-installed when delivered from Hutchinson/Mayrath.*

The control valve can be converted from the closed-center to the open-center configuration by removing the conversion plug.

- Remove outlet plug to access the closed-center plug.
- Remove the closed-center conversion plug for open-center operation.
- Re-install outlet plug.

Note: *Retain the conversion plug that was removed for future use.*

Figure 6.1 Conversion Plug Location

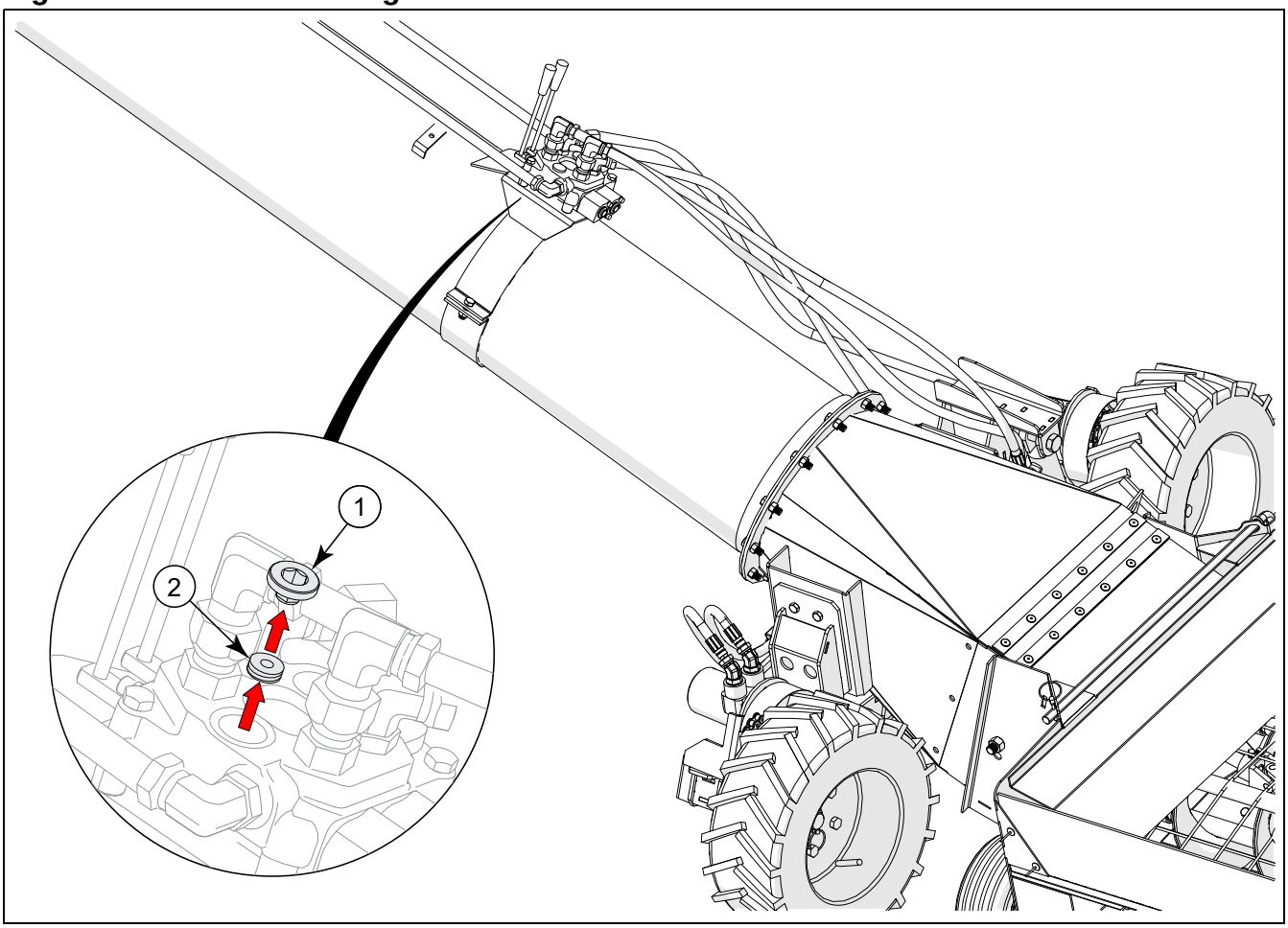

Table 6.1 Remove Plugs

Item	Description
1	Outlet Plug
2	Closed-Center Plug

6.2. POWER SWING REMOTE TRANSMITTER INSTRUCTIONS

Figure 6.2 shows the controls and indicators for the power swing remote and receiver.

Figure 6.2 Remote Transmitter and Receiver Controls and Indicators

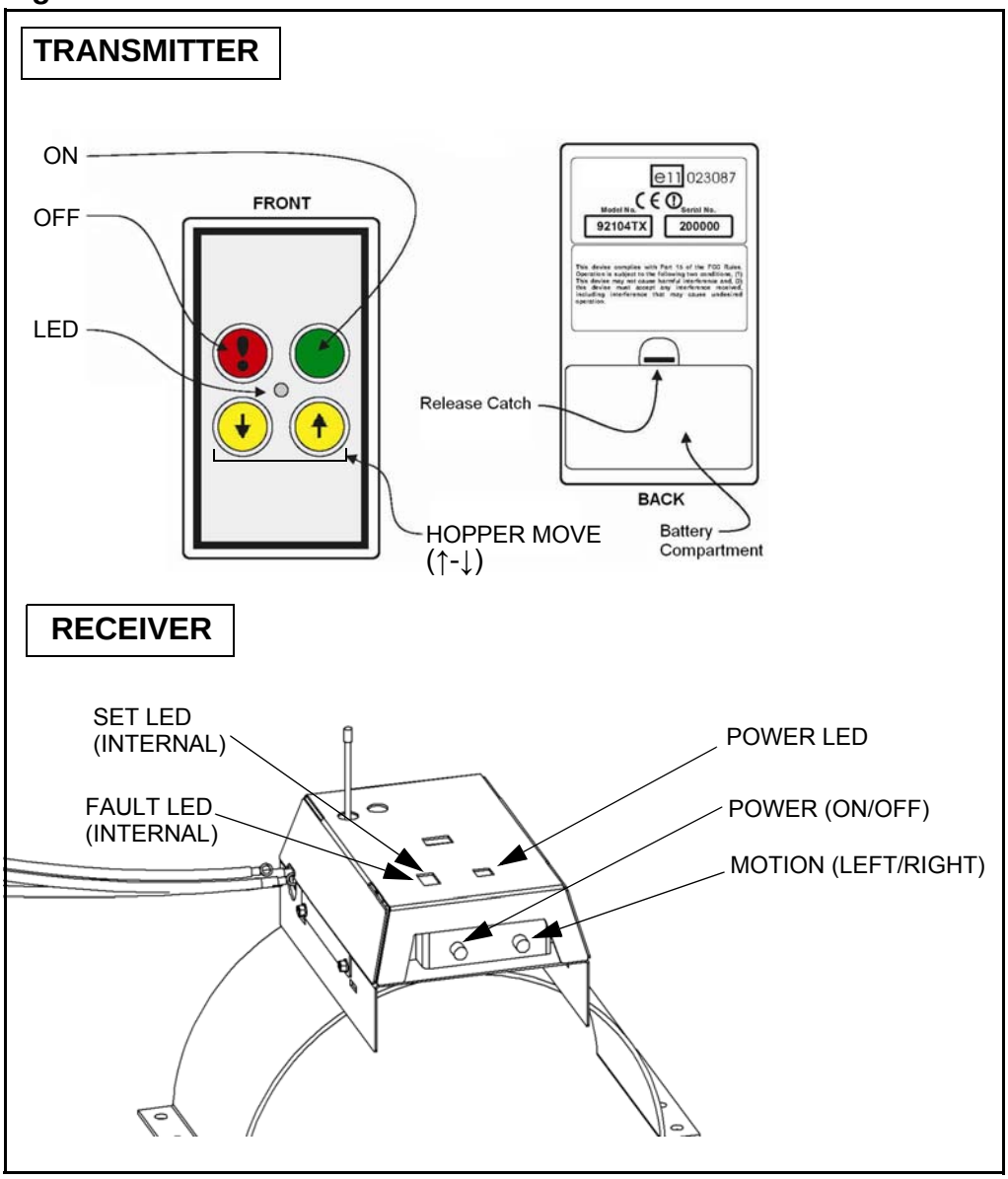

Note: *The transmitter LED blinks on and off when the transmitter and receiver are active (turned on by the transmitter) and no other button is pressed. The LED turns fully on while a transmitter button is pressed, unless the transmitter battery is low, in which case the LED pulses on and off.*

NOTICE The transmitter automatically transmits a STOP signal after 30 minutes; this de-activates the receiver and the transmitter keypad.

NOTICE The remote transmitter that comes with each power swing is normally factory programmed to function with the power swing receiver. Refer to specific instructions for programming additional or replacement remotes according to the serial number of the power swing receiver.

6.2.1. PROGRAMMING RECEIVERS

Turn on all the remote transmitters before programming.

Note: *To de-register all remote transmitters from the receiver, hold down the OFF button on a remote for at least 60 seconds.*

TO REGISTER THE FIRST REMOTE TRANSMITTER:

1. Switch OFF the receiver.

Note: *Steps 2 and 3 must be done within 10 seconds of each other. The FAULT LED on the receiver flashes for the duration of the registration window.*

2. Switch ON the receiver.
3. On the first remote, press the ON button and the yellow Down-Arrow Motion button at the same time and hold until the red light on the receiver SET LED illuminates solid red. Release buttons. The remote is programmed, and should be set aside.

TO REGISTER A SECOND REMOTE TRANSMITTER:

1. Switch OFF the receiver.

Note: *Steps 2 and 3 must be done within 10 seconds of each other. The FAULT LED on the receiver flashes for the duration of the registration window.*

2. Switch ON the receiver.
3. On a 2nd remote, press and release the ON button once, then press the ON button and the Down-Arrow Motion button at the same time and hold until the red light on the receiver SET LED illuminates solid red. Release buttons. The remote is programmed, and should be set aside.

TO REGISTER A THIRD REMOTE TRANSMITTER:

1. Switch OFF the receiver.

Note: *Steps 2 and 3 must be done within 10 seconds of each other. The FAULT LED on the receiver flashes for the duration of the registration window.*

2. Switch ON the receiver.
3. On a 3rd remote, press and release the ON button twice, then press the ON button and the Down-Arrow Motion button at the same time and hold until the red light on the receiver SET LED illuminates solid red. Release buttons. The remote is programmed, and should be set aside.

TO REGISTER A FOURTH REMOTE TRANSMITTER:

1. Switch OFF the receiver.

Note: *Steps 2 and 3 must be done within 10 seconds of each other. The FAULT LED on the receiver flashes for the duration of the registration window.*

2. Switch ON the receiver.
3. On a 4th remote, press and release the ON button three times, then press the ON button and the Down-Arrow Motion button at the same time and hold until the red light on the receiver SET LED illuminates solid red. Release buttons. The remote is programmed, and should be set aside.

7. Hutchinson/Mayrath Warranty

For a period of (1) year after receipt of goods by the original consumer buyer, Hutchinson/Mayrath will supply free of charge replacement parts for parts that prove defective in workmanship or material. Defective parts must be returned freight prepaid to a specified Hutchinson/Mayrath location. Only Hutchinson/Mayrath original repair parts may be used for warranty repairs.

This limited warranty does not extend to parts designed to wear in normal operation and be replaced periodically; or to damage caused by negligence, accident, abuse or improper installation or operation.

GOODS NOT MANUFACTURED BY HUTCHINSON/MAYRATH CARRY ONLY THE MANUFACTURER'S WARRANTY.

THIS UNDERTAKING IS IN LIEU OF ALL OTHER WARRANTIES, EXPRESSED OR IMPLIED, INCLUDING MERCHANTABILITY AND FITNESS FOR A PARTICULAR PURPOSE.

FAILURE TO FOLLOW THE INSTRUCTIONS CONTAINED IN THE OWNER'S & OPERATOR'S MANUALS AND THE ITEMS LISTED BELOW WILL RESULT IN THE VOIDING OF THIS LIMITED WARRANTY.

1. Improper assembly, including failure to properly install all safety equipment.
2. Improper installation.
3. Unauthorized alternations of goods.
4. Goods operated when obviously in need of repair.
5. Use of unauthorized repair parts.
6. Irresponsible operation.
7. Used to handle materials other than free flowing, nonabrasive and dry materials, as intended.
8. Damaged through abusive use or accident.

Limitation of Liability: BUYER AGREES THAT IN NO EVENT SHALL HUTCHINSON/MAYRATH HAVE LIABILITY FOR DIRECT DAMAGES IN EXCESS OF THE CONTRACT PRICE OF THE GOODS IN RESPECT OF WHICH CLAIM IS MADE. BUYER FURTHER AGREES THAT IN NO EVENT SHALL HUTCHINSON/MAYRATH ON ANY CLAIM OF ANY KIND HAVE LIABILITY FOR LOSS OF USE, LOSS OF PROFITS, OR FOR ANY INDIRECT, INCIDENTAL OR CONSEQUENTIAL DAMAGES.

Modifications: It is the policy of Hutchinson/Mayrath to improve its product whenever possible and practical to do so. We reserve the right to make changes, improvements and modifications at any time without incurring the obligation to make such changes, improvements and modifications on any equipment sold previously.

514 W. Crawford Street

Clay Center, Kansas, 67432 USA

Phone: (800) 523-6993 or (785) 632-2161

Fax: (785) 632-5964

Website: www.hutchinson-mayrath.com

Email: sales@hutchinson-mayrath.com

© Ag Growth International Inc. 2018
Printed in Canada