# NexGen 3000
# KLEAN SWEEP AUGER

# OWNER'S & OPERATOR'S MANUAL

**Effective February 10, 2015** **Publication No. 1044890**

**NexGen 3000 Klean Sweep**
**Model 3150**
**w/ Optional Tru-Klean Drag Conveyor**

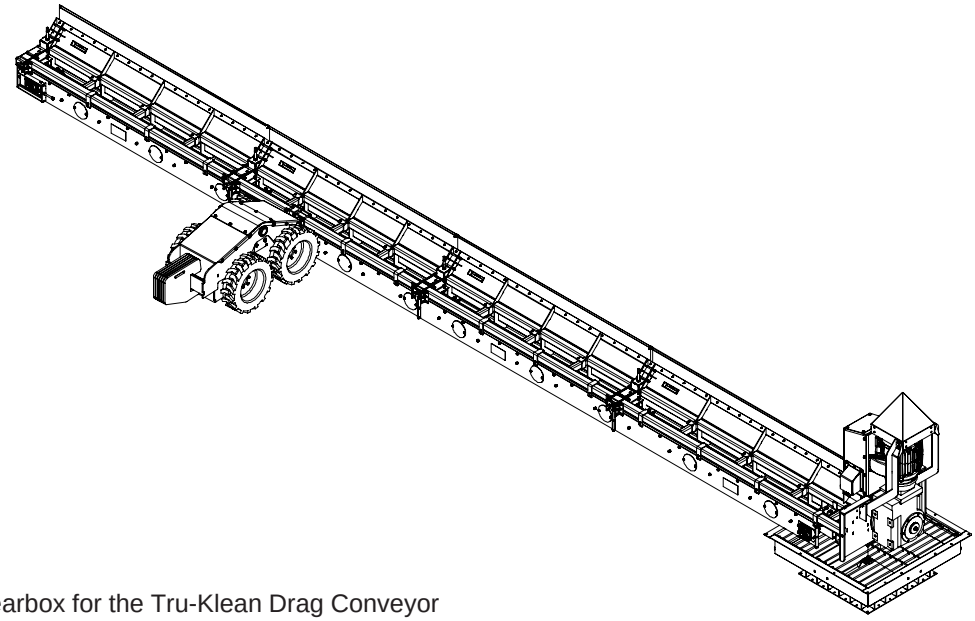

**IMPORTANT!** The gearbox for the Tru-Klean Drag Conveyor is shipped **Without Oil.** ***Oil must be added before sweep operation.***

***Hutchinson/Mayrath***
*A Division of **GLOBAL** Industries Inc.*

Hutchinson/Mayrath • P.O. Box 629 • Clay Center, KS. 67432
Ph. 785–632–2161 • Fx. 785–632–5964 • Toll Free 800–523–6993
www.hutchinson-mayrath.com

**Hutchinson/Mayrath**

*A Division of **GLOBAL** Industries, Inc.*

# POLICIES AND PROCEDURES

**Prices:** Prices in effect at time of shipment will apply. Prices are subject to change without notice. All prices are F.O.B. Clay Center, Kansas. Orders shipped from locations other than Clay Center, Kansas will be subject to additional charges, such as back freight and/or additional freight.

**Service Charge:** A service charge will be assessed for all past due balances as permitted by state law not to exceed 1-1/2% per month.

**Minimum Order:** Processing and handling costs necessitate a minimum charge of $15.00 net on all orders.

**Back Orders:** Back orders will be shipped as they become available. Contact Hutchinson/Mayrath Customer Service for alternative shipping options or if cancellation is desired.

**Damaged Goods:** It is the consignee's responsibility to check all shipments thoroughly upon receipt of goods. If any damage is discovered, it must be noted on the freight bill of lading before signing. The consignee must make necessary claims against the respective freight line. All damage claims must be submitted within 30 days of delivery receipt.

**Shortages:** All shortages must be noted at time of delivery. Shortages must be noted on the freight bill of lading before signing. Hutchinson/Mayrath must be advised of all concealed shortages upon discovery. Once notified of concealed shortages Hutchinson/Mayrath will advise corrective action to be taken.

**Return of Goods:** All returns must be approved by Hutchinson/Mayrath prior to shipment. All return requests will be issued a return authorization number. NO RETURNS WILL BE ACCEPTED WITHOUT A RETURN AUTHORIZATION NUMBER AND PRIOR AUTHORIZATION FROM THE FACTORY. All returns must be shipped prepaid. A 15% restocking charge will be applied to all returned merchandise. Custom Products may not be returned for credit. Only current products in new and salable condition may be returned. No safety devices may be returned for credit.

**Modifications:** It is the policy of Hutchinson/Mayrath to improve its product whenever possible and practical to do so. We reserve the right to make changes, improvements and modifications at any time without incurring the obligation to make such changes, improvements and modifications on any equipment sold previously.

**Limited Warranty:** (a) For a period of (1) year after receipt of goods by the original consumer buyer, Hutchinson/Mayrath will supply free of charge replacement parts for parts that prove defective in workmanship or material. Defective parts must be returned freight prepaid to a specified Hutchinson/Mayrath location. Only Hutchinson/Mayrath original repair parts may be used for warranty repairs.
(b) This limited warranty does not extend to parts designed to wear in normal operation and be replaced periodically; or to damage caused by negligence, accident, abuse or improper installation or operation.
(c) GOODS NOT MANUFACTURED BY HUTCHINSON/MAYRATH CARRY ONLY THE MANUFACTURER'S WARRANTY.
(d) THIS UNDERTAKING IS IN LIEU OF ALL OTHER WARRANTIES, EXPRESSED OR IMPLIED, INCLUDING MERCHANTABILITY AND FITNESS FOR A PARTICULAR PURPOSE.

**FAILURE TO FOLLOW THE INSTRUCTIONS CONTAINED IN THE OWNER'S & OPERATOR'S MANUALS AND THE ITEMS LISTED BELOW WILL RESULT IN THE VOIDING OF THIS LIMITED WARRANTY.**

(1) Improper assembly, including failure to properly install all safety equipment.
(2) Improper installation.
(3) Unauthorized alternations of goods.
(4) Goods operated when obviously in need of repair.
(5) Use of unauthorized repair parts.
(6) Irresponsible operation.
(7) Used to handle materials other than free flowing, nonabrasive and dry materials, as intended.
(8) Damaged through abusive use or accident.

**Limitation of Liability:** BUYER AGREES THAT IN NO EVENT SHALL HUTCHINSON/MAYRATH HAVE LIABILITY FOR DIRECT DAMAGES THE EXCESS OF THE CONTRACT PRICE OF THE GOODS IN RESPECT OF WHICH CLAIM IS MADE. BUYER FURTHER AGREES THAT IN NO EVENT SHALL HUTCHINSON/MAYRATH ON ANY CLAIM OF ANY KIND HAVE LIABILITY FOR LOSS OF USE, LOSS OF PROFITS, OR FOR ANY INDIRECT, INCIDENTAL OR CONSEQUENTIAL DAMAGES.

# TABLE OF CONTENTS

## GENERAL SAFETY STATEMENT

This manual was written with the safety of the operator and others who work with the equipment as our prime concern. The instructions presented will help the reader learn **SAFE** day to day work practices. We want you as our partner in safety.

It is your responsibility as an owner, operator or supervisor to know what specific safety requirements and precautions exist and to make these known to all other personnel working with the equipment or in the area, so that they too may safely perform their duties and avoid any potentially hazardous situations.

**We suggest the implementation of a Safety Program for all personnel that includes, but is not limited to, the proper use of PPE (personal protective equipment), Fall Protection Systems and Lock Out-Tag Out procedures.**

Please remember safety equipment provides important protection for persons around a grain handling system that is in operation. Be sure **ALL** safety shields and protection devices are installed and properly maintained. If any shields or guards are damaged or missing, contact your dealer to obtain the correct items.

Avoid any alterations of the equipment. Such alterations may create a dangerous situation where serious injury or death may occur.

## SAFETY ALERT SYMBOL

**The safety symbol shown is used throughout this manual to alert you to information about unsafe actions or situations, and will be followed by the word DANGER, WARNING, or CAUTION.**

**DANGER** - Indicates immediate hazards that may result in severe injury or death. **WARNING** - Indicates unsafe actions or situations that may cause severe injury, death and/or major equipment or property damage. **CAUTION** - Indicates unsafe actions or situations that may cause injury, and/or minor property damage.

Watch this symbol - it points out important safety precautions. It means - **ATTENTION! Become alert! Your safety and the safety of others is involved!** Read the message that follows the symbol when a warning is given, be alert to the possibility of personal injury or death.

**BE ALERT!**
**YOUR SAFETY IS INVOLVED**

## Follow Safety Instructions

Carefully read all safety messages in this manual and safety signs on your machine. Check to ensure all Safety Decals are present and in good condition.

If a decal cannot easily be read for any reason, or has been painted over, replace the decal immediately. Safety decals are offered free of charge, and can be ordered through your Hutchinson/Mayrath dealer or directly from the factory.

Learn how to operate the machine and how to use controls properly.

Keep your machinery in proper working condition. Understand service procedures before doing work. Never lubricate, service or adjust machine while it is in operation.

Keep work area clean, dry and free from of all debris and tools which may cause accidental tripping or falling.

**Read and Understand Manual**

**Understand Service Procedures**

**Keep Work Area Clean**

## Prepare for Emergencies

Keep emergency numbers for doctors, ambulance service, hospital and fire department near your telephone.

Keep a first-aid kit and fire extinguisher handy.

Be prepared if a fire starts


**First Aid Equipment**

**Fire Extinguisher**

## Wear Proper PPE (Personal Protective Equipment)

Some materials can create flying debris when they are filed, cut or drilled. Safety glasses should be worn at all times to protect your eyes from such debris.

Hearing protection should be worn when operating power tools or other power equipment that could be harmful to your hearing.

Gloves should be worn to protect your hands from sharp metal and plastic edges, as well as providing protection from the handling of heavy objects.

Wear steel toe boots to protect your feet from falling debris.

Wear a hard hat to help protect your head from falling objects as well as from accidental bumping.

Use caution when working at elevations greater than four (4) feet *(1.22 m)* above the ground.

Use the appropriate fall protection equipment as set forth by OSHA guidelines and regulations.

A respirator may be needed to prevent breathing potentially toxic fumes and dust, especially when working within a grain bin or storage structure.


Eye & Hearing Protection


Gloves


Steel Toe Boots


Hard Hat


Fall Protection

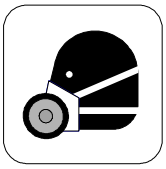
Respirator

## Operate Electric Motor(s) Properly

Do not operate electric motor equipped units until motor(s) are properly grounded.

Know how to "Shutdown and Lockout" the power source. Shutdown and lockout power source before performing any service, maintenance or adjustments to the unit.

Disconnect power on electrical driven units before resetting motor overloads.


Lockout / Tagout


Electric Shock Hazard

## Stay Clear of Moving Parts

Keep all shields, covers and safety devices in place at all times.

Entanglement in moving chains, rotating impeller arms and sprockets will cause serious injury or death.

Wear close fitted clothing. Keep hands, feet and clothing away from moving parts.

Shutdown and lockout power source before making adjustments, cleaning or maintaining the equipment.



Entanglement Hazards

## GRAIN BIN SAFETY

The Klean Sweep is generally designed to remove the grain that remains in the bin or storage structure, after all grain that can be emptied through the center and intermediate wells has flowed out. **Be aware of the dangers inherent in grain bins.**

Consult the grain bin manufacturer's manual for information on the proper loading and unloading of the bins, structural stress analysis, adequate venting and important safety information.



**WARNING! Do Not enter the bin if the grain has "Bridged" or has not flowed normally out of the bin, See Example's 1 & 2. The grain may suddenly break loose and bury resulting in suffocation.**

**Do Not enter the bin unless all power driven equipment has been shut down and locked out.**

**Never enter the bin unless monitored by another person.**

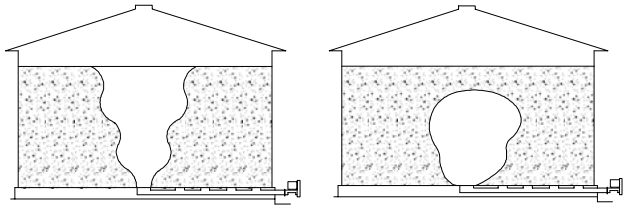

**Example 1**
(Abnormal Flow)

**Example 2**
("Bridging")

## SAFETY DECALS

Check to ensure all Safety Decals are present and in good condition. If a decal cannot easily be read for any reason, or has been painted over, replace the decal immediately. Safety decals are offered free of charge, and can be ordered through your Hutchinson/Mayrath dealer or directly from the factory.

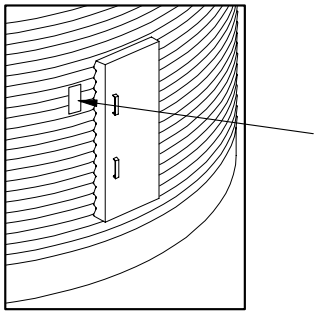


**Danger Decal,**
**Part No. 1002303**
**Rotating Flight**
**Never Enter Bin Unless All Power is Disconnected and Locked Out**


**Part No. 1002304**
**Keep Out of Bin While Sweep is in Operation**
**(On all Sweep Shields)**

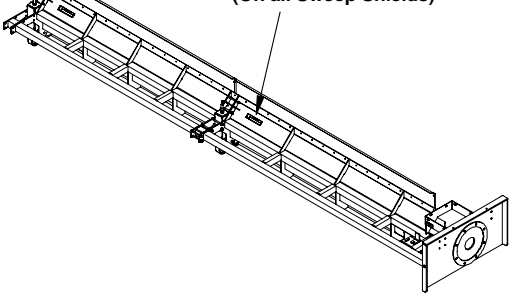

## MACHINE INSPECTION

Our augers are well made and we are proud of our line of equipment. We would like you, as our customer, to do your part in using caution and good judgement in using our equipment, as well as any other machinery.

**After delivery of your new auger and/or completion of assembly and before each use, inspection of the machine is mandatory.** This inspection should include, but not be limited to:

1. Check to see that all guards listed in the assembly instructions are in place, secured and functional.
2. Check all safety signs (decals) and replace any that are worn, missing or illegible. Safety signs may be obtained free of charge from your dealer or ordered from the factory.
3. Check ***all*** fasteners; nuts, bolts, set screws etc. for tightness.
4. Check oil level in gearbox (See the Lubrication and Maintenance Section).
5. Check all electrical connections and wiring.
6. Check to ensure chain tension is sufficient.

## GENERAL SWEEP INFORMATION

**WARNING! During initial start-up and break-in period, the operator shall be aware of any unusual vibrations or noises that would indicate a need for service or repair.**

**Keep all safety shields and devices in place. Keep hands, feet, and clothing away from moving parts.**

**The operator should have a full view of the auger work area and check that all personnel are free from designated work areas before adding power.**

- Obtain any needed replacement parts from your dealer and install ***before*** using the machine.
- It is important to become familiar with the routine operating procedures before attempting start-up.
- Inspect the drive before adding power and know how to ***shutdown*** in an emergency (See Page 11).
- Be cautious when working with electrical tools and equipment, especially around metal structures.
- Wear the appropriate personal protective gear when necessary, i.e. safety glasses, gloves, hearing protection, etc.

### GENERAL SWEEP INFORMATION (con't.)

The NexGen Commercial Sweep is powered by a 10:1 gear reducer drive. **The reducer gearbox is shipped with oil.**

## DESIGNATED WORK AREA

- Before starting auger operations, a designated work area should be established around the bin and entire work site.

**WARNING! Under no circumstances should persons not involved in the operation be allowed to trespass into the work area.**

**It shall be the duty of all operators to see that children and/or other persons stay out of the work area! Trespass into the work area by anyone not involved in the actual operation, or trespass into a hazard area by anyone shall result in an immediate shutdown by the operator.**

**It shall be the responsibility of all operators to see that the work area has secure footing, is clean and free of all debris and tools which might cause accidental tripping and/or falling. It shall also be their responsibility to keep the work area clean and orderly during the operation.**

**Use caution when working in areas above the ground. Persons operating, servicing or repairing equipment that requires above ground work shall be properly secured with the use of "fall protection" equipment as set forth by OSHA guidelines and regulations.**

**Metal buildings, scaffolding and other types of work surfaces can become slippery, especially when surfaces are wet and/or oily. This can create hazardous working conditions. Use caution when working, climbing or walking on these surfaces.**

## ELECTRIC DRIVE POWER REQUIREMENTS

**WARNING! Shut off power and lockout whenever cleaning or servicing the equipment.**

**The reset and starting controls must be located so that the operator has full view of the entire operation.**

**Disconnect power before resetting motor overloads.**

**Make certain electric motor is grounded.**

**Keep hands, feet and clothing away from moving parts.**

**Keep all safety shields and devices in place.**

**A main power disconnect switch that can be locked in only the "Off" position shall be provided. This shall be locked whenever work is being done to the auger.**

**Do Not enter the grain bin unless all power driven equipment has been shutdown and locked out.**

**Never enter the bin when the sweep auger is in operation.**

**Electric motors and controls shall be installed by a qualified electrician and must meet the standards set by the National Electric Code and all local and state codes.**

**A main power disconnect switch that can be locked only in the "Off" position shall be provided. This shall be locked whenever work is being done to the auger.**

**Horsepower *(kw)* Requirements**

| Bin Dia. | No. of Sections | Electric H.P. *(kw)* |
|---|---|---|
| 48' – 55' | 3 | 20 *(15 kw)* |
| 59' – 68' | 4 | 25 *(18.5 kw)* |
| 72' – 80' | 4 | 30 *(22 kw)* |
| 88' | 5 | 30 *(22 kw)* |
| 90' – 92' | 5 | 40 *(30 kw)* |
| 105' – 113' | 6 | 40 *(30 kw)* |
| 120' | 6 | 50 *(37 kw)* |
| 132' – 136' | 7 | 50 *(37 kw)* |
| 150' | 8 | 50 *(37 kw)* |

The horsepower *(kw)* recommendations are based on clean, dry shelled corn or wheat.

## OPERATING CAPACITIES

The performance of augers can vary greatly due to operating conditions. Different materials, moisture content, amount of foreign matter, methods of feeding and flight speed all play a role in the performance of the auger.

Maximum possible capacity will be less with high moisture grain (above 15%) than with dry grain. Twenty-five percent (25%) moisture could cut capacity back by as much as 40% under some conditions.

Motor speed can be varied from 1750 RPM f/ 15,000 BPH *(405 TPH)* to 875 RPM f/ 7,500 BPH *(203 TPH)* through the use of the control box and VFD's.

## IMPORTANT! BEFORE FILLING BIN

**WARNING! Before entering the bin, shutdown all unloading equipment and lock-out the power source.**

**Never enter the bin when the sweep auger is in operation.**

**Never attempt to control the operation of the sweep auger by pushing on it with brooms, shovels or other devices.**

**Stay clear of the under-floor unloading auger at the bin wells. The unload auger is exposed at these locations in the bin floor.**

Operation of the unload auger will generally include moving grain out of grain storage structures and/or into optional dump hoppers that then move the grain to other storage structures or into transport equipment.

Grain is fed into the unload auger through bin wells that are equipped with slide gates to control the rate of grain flowing into the unload auger.

Before filling the bin with grain, make sure all bin well gates are closed. If the gates are left open the wells will fill with grain. Upon start-up, the unload auger would be under load, this can result in damage to the auger, the motor or both. Such damage would be considered abuse of the equipment and will void the warranty.

The commercial sweep will remain in the bin as the grain is being loaded into the bin. Follow the recommendations below to ensure the sweep will operate properly when auger operations are started:

- **Before filling bin,** position sweep directly above the intermediate wells as shown in the illustration below (if the sweep is not positioned above the intermediate wells, it will cause the sweep to begin operating under-load. This can cause damage to the sweep and its motor).
- Make sure all guards and covers are in place.
- Make sure wheels are adjusted properly to level flights and shields.
- Verify all electrical conduit is properly secured so it cannot become damaged as grain is entering the bin, or by the weight of the grain as the bin fills.

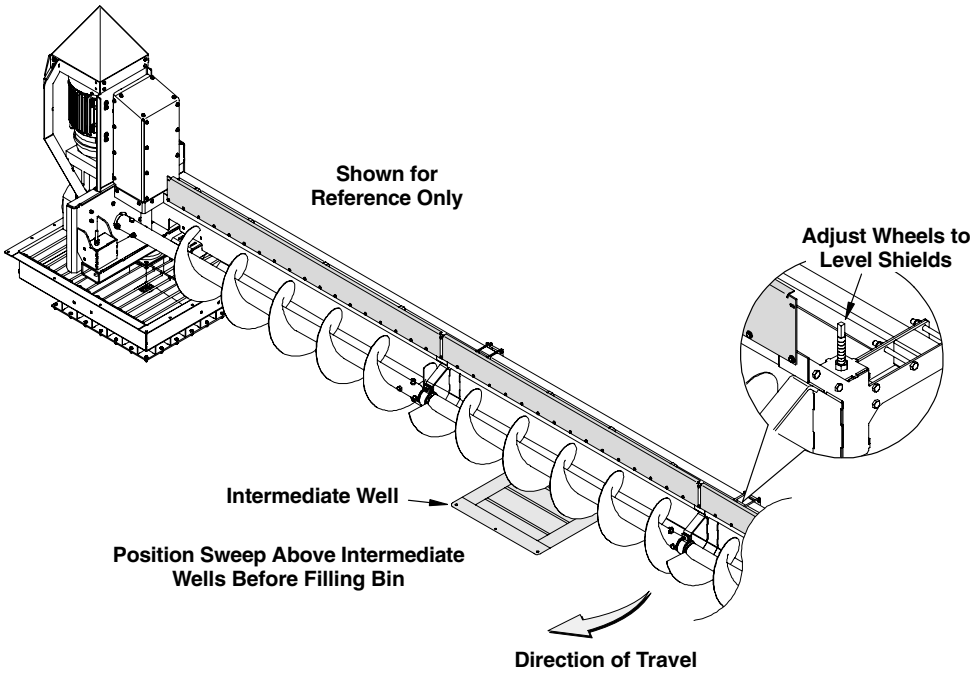

## BIN UNLOADING PROCEDURES

**WARNING! Make certain everyone is clear before operating equipment.**

**The operator shall be aware of any unusual vibrations, noises and the loosening of fasteners.**

**Keep all safety shields and devices in place.**

**Keep hands, feet and clothing away from moving parts.**

**Shut off and lock-out power to adjust, service or clean any powered equipment.**

- Always be aware of the surrounding work area when starting the equipment. Make sure all persons are clear and all tools and loose materials are cleaned from the area.
- Assure all electrical connections and conduit is properly secured. Know the proper procedures for Shutdown and Lockout (See Page 11).
- Use proper bin unloading procedures to remove as much grain from the bin as possible.
- During the operation of the auger, one person shall be in a position to monitor the operation at all times. **Do Not leave the unit operating unattended.**
- Inspect the drive before adding power and know how to shutdown in an emergency (See Page 11). Visually inspect the auger periodically during operation.



**WARNING! Do Not enter the bin if the grain has "Bridged" or has not flowed normally out of the bin (See Fig. 1). The grain may suddenly break loose and bury resulting in suffocation.**

**Do Not enter the bin unless all power driven equipment has been shutdown and locked-out.**

**Never enter the bin unless monitored by another person.**

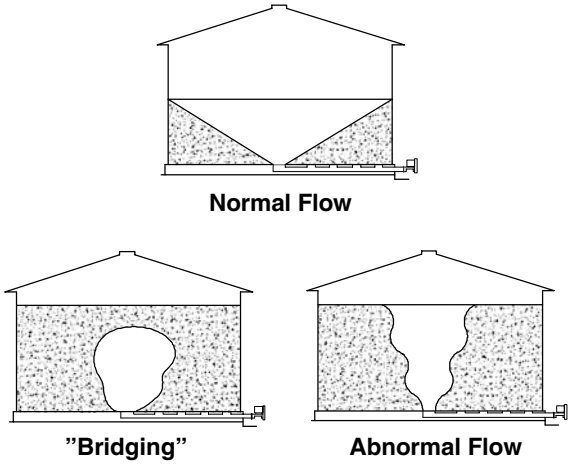


**Fig. 1**

## TO START BIN UNLOADING OPERATION

1. Make sure all bin well gates have been **closed** and **start** under-floor unloading auger.
2. Open the center well gate gradually until desired flow has been established (you should only need to open the gate approximately 3" to 6" *(76 mm to 15.2 cm)* to acquire a full load).

   **Do Not overload the unloading auger, this can cause high torque loads and possible damage to the auger.**
3. When the natural gravity flow of grain to the center well has stopped, close the center well gate and allow unload auger to clear itself out.

## INTERMEDIATE WELL OPERATION

Grain storage bins will use a specific number of intermediate wells depending on bin diameter.

The control rods that open the well gates may operate differently depending on the diameter of the bin, the style of the rack and pinion and how the control rods are connected to the well gates.

Refer to the instructions supplied with the unload auger and bin wells for proper operation of the intermediate wells.

***INTERMEDIATE WELL OPERATION (con't.)***

1. Start the unloading auger and open the center well and the first set of intermediate wells nearest the center well as shown in Fig. 2 (you should only need to open them 2" to 4" *(51 mm to 10.2 cm)* to acquire a full load).

   When grain flow stops, gradually open the next set of intermediate wells and let them clean out, then the next set and so on until all wells have been opened and cleaned out (always leave the center well and previously opened gates open as the next set is of gates are opened).

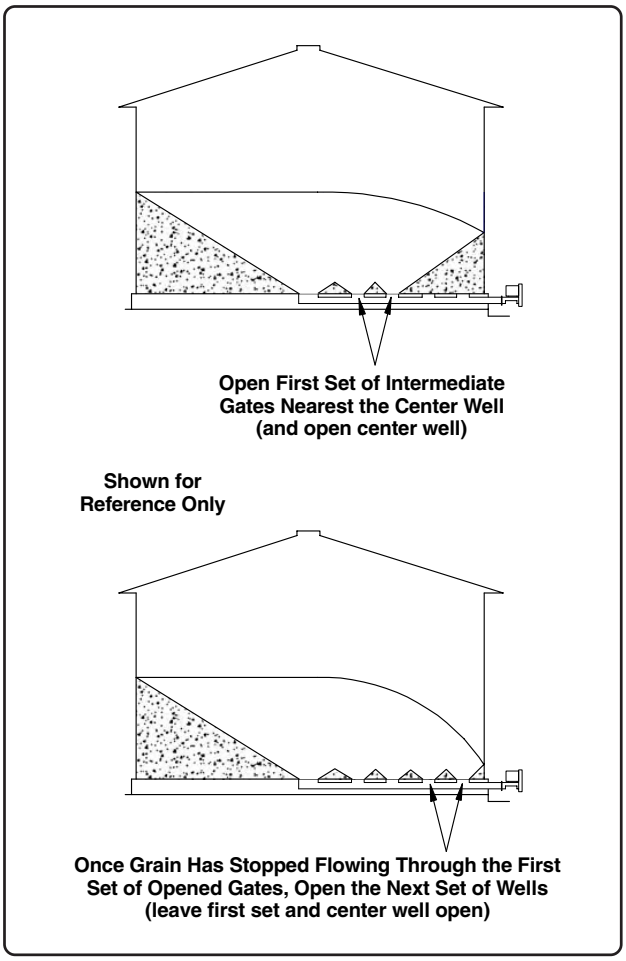


**Fig. 2**

After all grain that can be emptied through the center and intermediate wells has flowed out, operation of the sweep auger can be started.

The sweep auger will clear most grain after two rotations. Refer to the following procedures for proper sweep operation and final clean-out.

***SWEEP AUGER START-UP***

**WARNING! Before entering the bin, shutdown all unloading equipment and lock-out the power source.**

**Never enter the bin when the sweep auger is in operation.**

**Never attempt to control the operation of the sweep auger by pushing on it with brooms, shovels or other devices.**

**Stay clear of the under-floor unloading auger at the bin wells. The unload auger is exposed at these locations in the bin floor.**

1. **Shut down and lockout the power source of all power driven equipment.**
2. Verify the shield height is properly set [recommend 1/2" *(13 mm)* clearance from floor]. Use wheel adjustment to set height. Loosen jam nut and turn all-thread rod to adjust wheel height.

   Check for obstacles in floor such as bolt heads etc. that may interfere with sweep movement, make necessary adjustments accordingly.

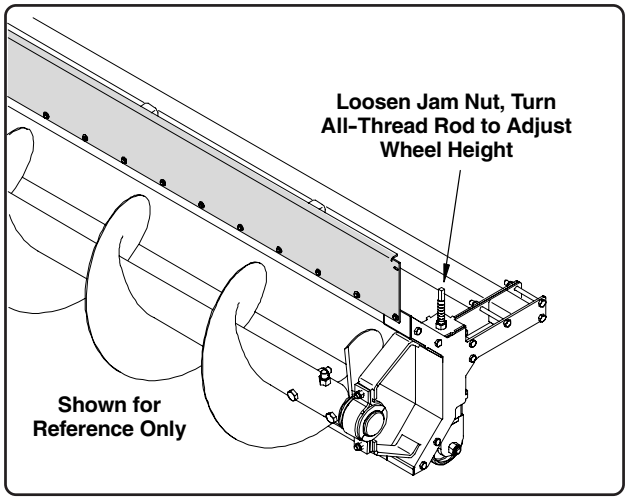


**Fig. 3**

***SWEEP AUGER START-UP (con't.)***

3. Check that tractor(s) are properly secured to shield and the appropriate amount of weights are mounted onto the tractor(s).

   The operator will need to watch the sweep in operation, from outside the bin to determine if the amount of weight is sufficient.

4. Check that all guards and shields are in place and properly secured. Check all fasteners for tightness.
5. Check chains for proper tension and check that all electrical conduit is clear from moving parts and that the connections are secured.
6. Clear the bin of all persons, and obstacles that may interfere with sweep operation. Restore power.

## *FINAL CLEAN-OUT*

**WARNING! Before entering the bin, shutdown all unloading equipment and lock-out the power source.**

**Never enter the bin when the sweep auger is in operation.**

**Never attempt to control the operation of the sweep auger by pushing on it with brooms, shovels or other devices.**

**Stay clear of the under-floor unloading auger at the bin wells. The unload auger is exposed at these locations in the bin floor.**

**If the Tru-Kean option was purchased, final clean-out will consist mainly of operating the electronic sweep system until the Final Klean function has been completed.**

**After Final Klean has ended, it is only necessary to enter the bin to sweep any grain that remains.**

**Never enter the bin unless all unloading equipment has been shutdown and power source locked out.**

If the Tru-Klean option was **not** purchased, continue with the following procedures for final clean-out.

1. With all well gates opened, start the under-floor unloading auger, **then** start the sweep auger.

   After one rotation the sweep will have cleared much of the grain from the bin.

2. **Shut down and lockout the power source of all power driven equipment.**

   Clean the outer area of the floor (sweep and scoop by hand) the remaining grain into a circular pile towards the center of the bin (See Fig. 4).

   Make sure everyone is out of the bin (make sure all brooms, shovels etc. are removed from the bin).

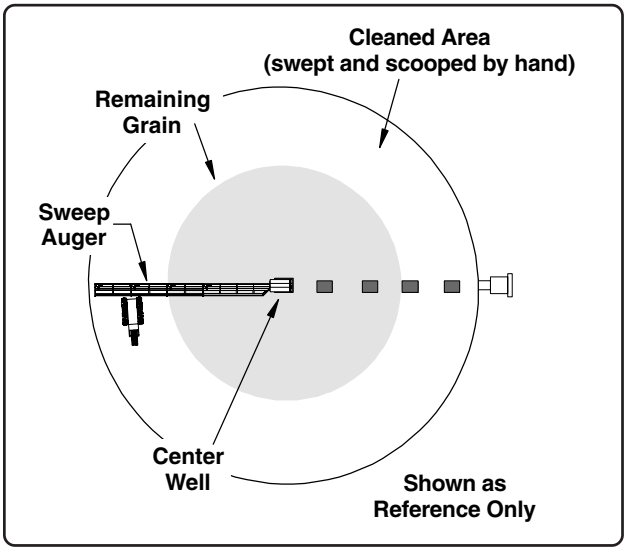


**Fig. 4**

3. Start under-floor unloading auger, then start the sweep auger. After one rotation the pile of grain will have been reduced again.

   Continue with these procedures until all grain has been removed from the bin.

4. After all grain has been removed, **shut down and lockout all power driven equipment.**

   Prepare the sweep for the next time the bin will be filled (See Page 7 for procedures on sweep preparation before filling the bin).

## SHUTDOWN/LOCKOUT

**WARNING! Starting the unit under load may result in damage to the auger and/ or motor. Such damage is considered abuse of the equipment and will not be covered under warranty.**

**If the operator must leave the work area, or whenever servicing or adjusting, the auger must be stopped and the power source locked out.**

**Precaution should be made to prevent anyone from starting or operating the auger when the operator is absent from the work area.**

### EMERGENCY SHUTDOWN

Should the auger be immediately shutdown under load, **disconnect** and **lockout** the power source.

Close the center and intermediate well gates. Clear grain away from the discharge opening.

Reconnect the power source and run the auger to clear the grain gradually. **Never** attempt to start when under load.

### NORMAL SHUTDOWN

When shutting down the auger, close all well gates and allow unloading auger to clean out before stopping the unit.

Before the operator leaves the work area, **the power source shall be locked-out** (See “Lockout”).

### INTERMITTENT SHUTDOWN

When an auger is stopped and restarted while under full load, it may result in damage to the auger. Therefore if intermittent operation is to be carried out, it is advisable to reduce the load level.

If an auger is kept from absolute filling, it will make start-up easier and will convey grain more efficiently.

### LOCKOUT

The power source shall have a main disconnect box that can be locked only in the **“Off”** position. This is what **“shutdown and lockout”** refers to, shut off the main power source and lock the handle or breaker switch in the “Off” position.

## TROUBLE SHOOTING

### LOW CAPACITY

- Sweep capacity may vary as the angle of sloping grain varies.
- **Do Not** operate a sweep that is overfeeding the unloading auger. The slide gate on the center bin well should be left open during sweep operation.

### SWEEP FLIGHT & SHIELD NOT MOVING

- Check clearance between sweep shield and floor for excessive dragging and for obstacles that prevent the sweep from moving. Shield height can be adjusted using the wheels at the rear of the shields.
- The grain may have gone out of condition due to moisture or insect activity and has become hard or caked. Stop the sweep auger and **lockout the power source** before entering the bin to correct this or any other difficulty.
- The electric motor may not be operating properly. Check electrical connections and power supply.

### GRAIN PLUGGING UNLOAD AUGER

- The unload auger may be getting too much grain causing “jamming” inside the unload tube. **Shut down and lockout power source,** then clean as much grain from each of the wells and from the unload tube as possible. Reconnect power and start unload auger.
- Assure the auger is free of foreign material such as sacks, tarp corners etc. A plug at the discharge end of the unload tube will cause the unload auger to plug. **Shutdown and lockout power source** before attempting to work on unit.

## 10:1 REDUCER f/ KLEAN SWEEP

**WARNING! Never attempt to clean, adjust or lubricate a machine that is in operation.**

**Always shutdown and lockout the power source to all power driven equipment before servicing, repairing or maintaining any auger components.**

**The 10:1 reducer gearbox is filled with oil prior to shipment. See below for grade and capacity.**

**Even under normal working conditions, oil still has a tendency to dissipate. Periodically check oil level and maintain proper level.**

**No initial oil change after break-in is needed.**

1. Remove the plug from the top of the gearbox and replace with the vent\fill plug furnished with the gearbox (See Fig. 5).

   Remove the oil level check plug from the flanged side of the gearbox and exchange it with the plug on the back side of the gearbox (See Fig. 5).

   Oil should leak from the opening. If additional oil is needed, remove the vent\fill plug from the top of the gearbox. Watch the oil level check opening. When oil begins to leak from the opening stop adding oil. **Do Not overfill.** Additional oil may damage the seals or be forced through the vent plug.

   Replace plug(s) once oil level has been established.

**Capacity: Approx. 43.35 qts. *(41.0 L)***

**Oil Grade: Mobilgear 600 XP 220 or equivalent**

**Change Frequency: 10,000 hours or 3 years whichever comes first.**

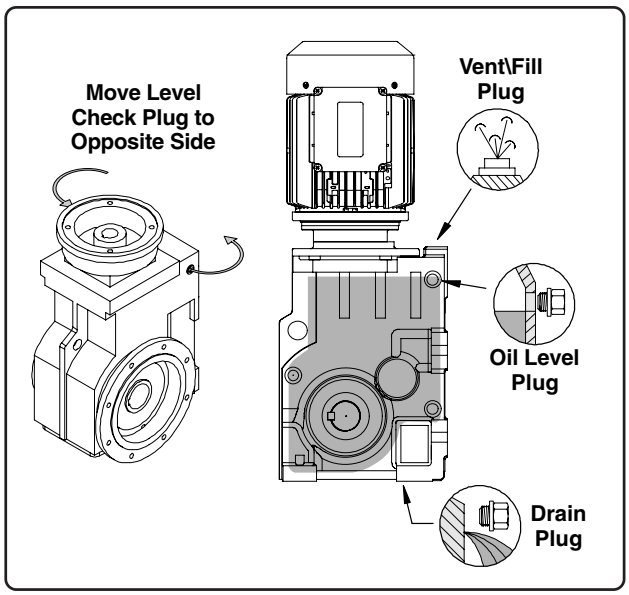


**Fig. 5**

## DRAG UNIT GEARBOX

**The drag units' gearbox is shipped without oil. Oil must be added before sweep operation.**

**Refer to the manual provided with the gearbox for information on the frequency of changing oil, proper viscosities and other pertinent information.**

**The gearbox is classified as Group 1, Model 66 for reference in the manual.**

Remove the plastic plug from the top of the gearbox (See Fig. 5A). Remove the level check plug from the side of the gearbox, add approx. **24 oz. *(0.71 L)*** of a **GL 5EP 220 lubricant** until oil begins to flow from the level check opening, re-install level check plug.

Install the bushing and vent plug into the 90° elbow and thread the elbow into the fill opening from which the plastic plug was removed. Orient the elbow as shown in Fig. 5A.

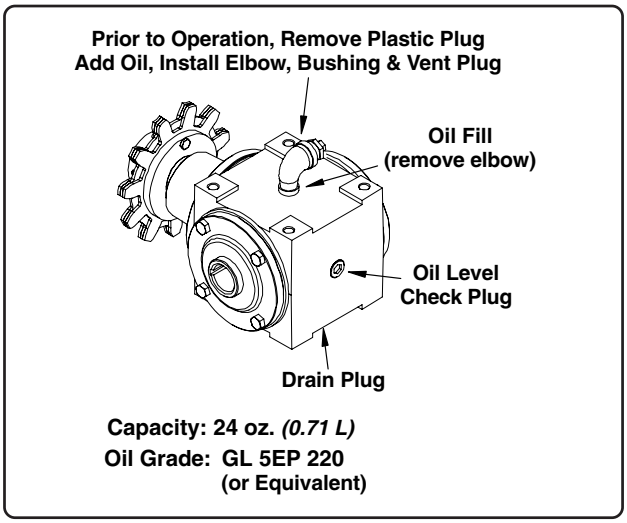


**Fig. 5A**

## 4 X 4 TRACTOR

Refer to the manual supplied with the tractor for more maintenance and operating information.

It is recommended to inspect the drive chains and sprockets on the tractor before each start-up.

- Remove top cover from tractor. Clean grain dust build-up from chains and other components within the tractor frame.

  Check that all fasteners are tight and chains are properly tensioned. Use a vegetable/soy based lubricant to lightly lubricate the chains.
- Inspect electrical wiring for damage and ensure all connections are tight.

## FLIGHT BEARINGS (NYLON)

The end of each flight section is supported by a nylon bearing. The bearings should be checked each time the sweep is put into operation.

Check for wear (bearings may become oval shaped) as well as cracking or other breakage. Also check hardware for tightness.

If a bearing does need to be replaced:

1. Remove the 1/2" x 2" bolts and nylon locknuts that secure the bearing clamps to the support stand.

   Remove old bearing and replace with new.

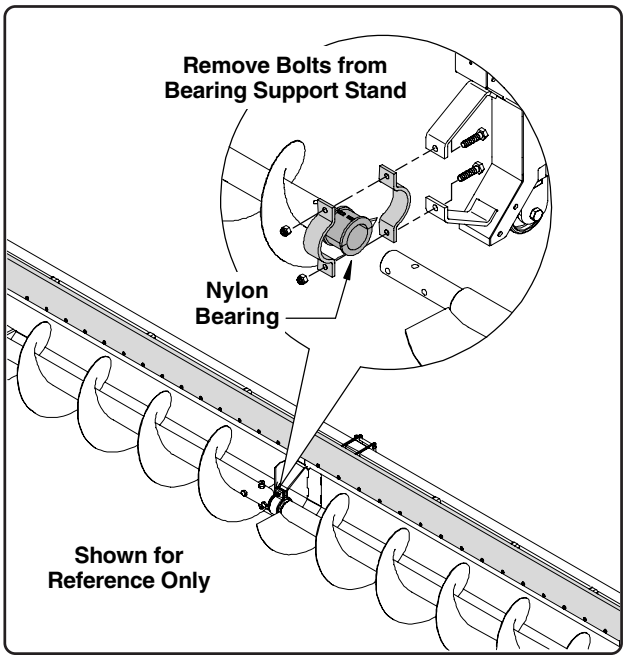


Fig. 6

## ADJUSTMENT WHEEL LUBRICATION

The adjustment wheels are equipped with a grease zerk (See Fig. 6A). The wheels should be greased along with all other maintenance and service tasks performed prior to refilling the bin.

Make sure the grease zerks are clean of dirt, dust and other debris before adding the grease. Use a good quality lithium based grease and add **1 to 2** pumps into each wheel. Spin the wheels a few times to help distribute the grease.

Wheel height adjustment can be made by loosening the jam nut on top of the bearing stand and turning the threaded adjustment rod using a 1/2" wrench.

Once the desired height has been established, retighten the jam nut.

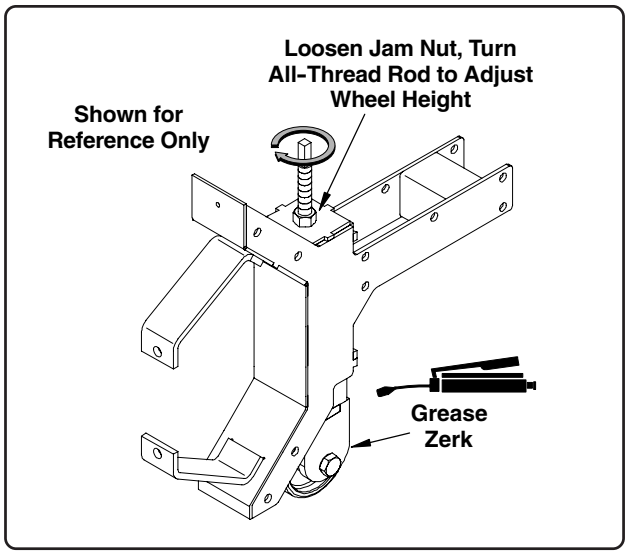


Fig. 6A

## CENTER WELL BRONZE BUSHINGS

The center well has two bronze bushings in the bearing plates that the pivot bracket slides into.

There is a bushing on the top plate and one in the lower plate (See Fig. 7).

Although these bushings require no lubrication, they should be checked periodically.

They can eventually begin to wear and may become oval shaped or begin to spin inside the pivot plate.

If replacement is required, remove the old bearing and press in a new one.

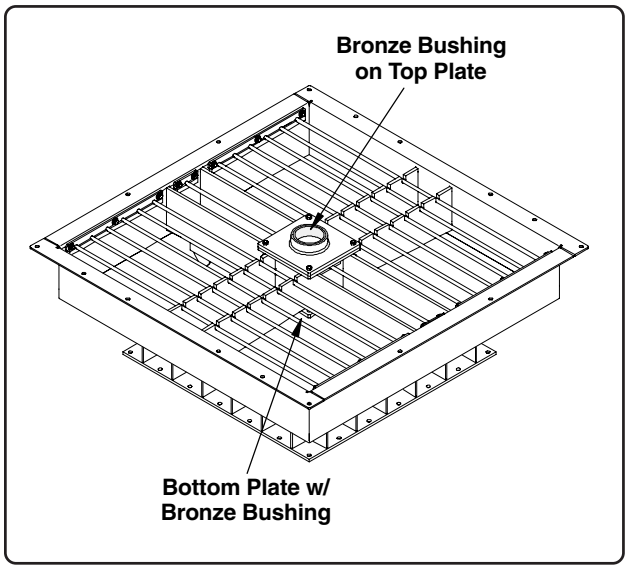


Fig. 7

## CENTER WELL PREPARATION

**CAUTION! Keep the assembly and work area clean and free of tools and objects which could cause trip hazards or other unsafe situations.**

**To help prevent personal injury, always use the proper protective gear (ie. safety glasses, gloves, hearing protection etc.).**

**Some parts and components are heavy, use assistance with lifting and while assembling these parts.**

Installation of the center well will be determined by your particular application.

1. Locate the center of the bin (the center of the pivot tube in the center of the well will be located at bin center). Use the dimensions shown below to determine the size of the opening for the well. A 3/16" *(5 mm)* deep recess should be formed around the outer top of the opening to allow for the thickness of the center well flange.

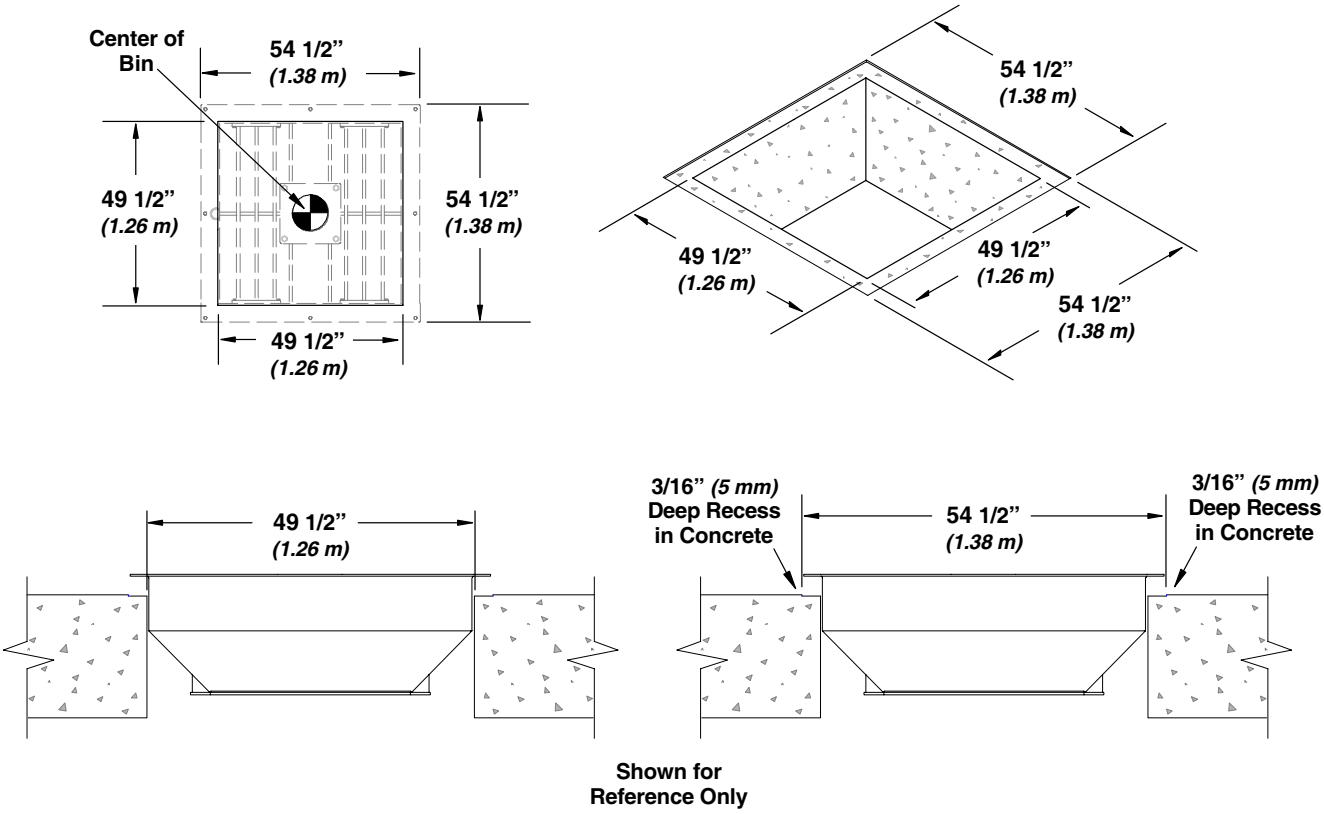

## ENTRANCE SWEEP SHIELD to PIVOT ASSEMBLY

### Install Pivot Bracket to Entrance Sweep Shield

**The entrance sweep shield is the same part for all bin diameters.**

1. Remove the pivot bracket from the center well assembly. Insert the four (4) tensioner springs into the cups at each end of the pivot bracket.
2. On the entrance sweep shield, install the two (2) 5/8" x 3" bolts into the bottom two holes that will be used to attach the gearbox to the sweep shield (See illustration below). I**MPORTANT! The two (2) 5/8" x 3" bolts should be installed prior to attaching the pivot bracket to the sweep shield.**
3. Position the entrance sweep shield over the pivot bracket and attach bracket to the sweep shield as shown in the illustration below. Secure pivot bracket to sweep shield using two (2) 3/4" x 12" tensioner rods and four (4) 3/4" jam nuts. **Note: the tensioner rods will be adjusted after sweep assembly is complete. They are used in conjunction with the wheel height adjustment to assist with leveling the sweep shields.**
4. After the pivot bracket has been installed onto the entrance sweep shield, reinstall the pivot bracket into the bearing mount in the center well. If necessary, place blocks or similar supports at end of shield to help keep it level and supported during assembly of the gearbox and motor.

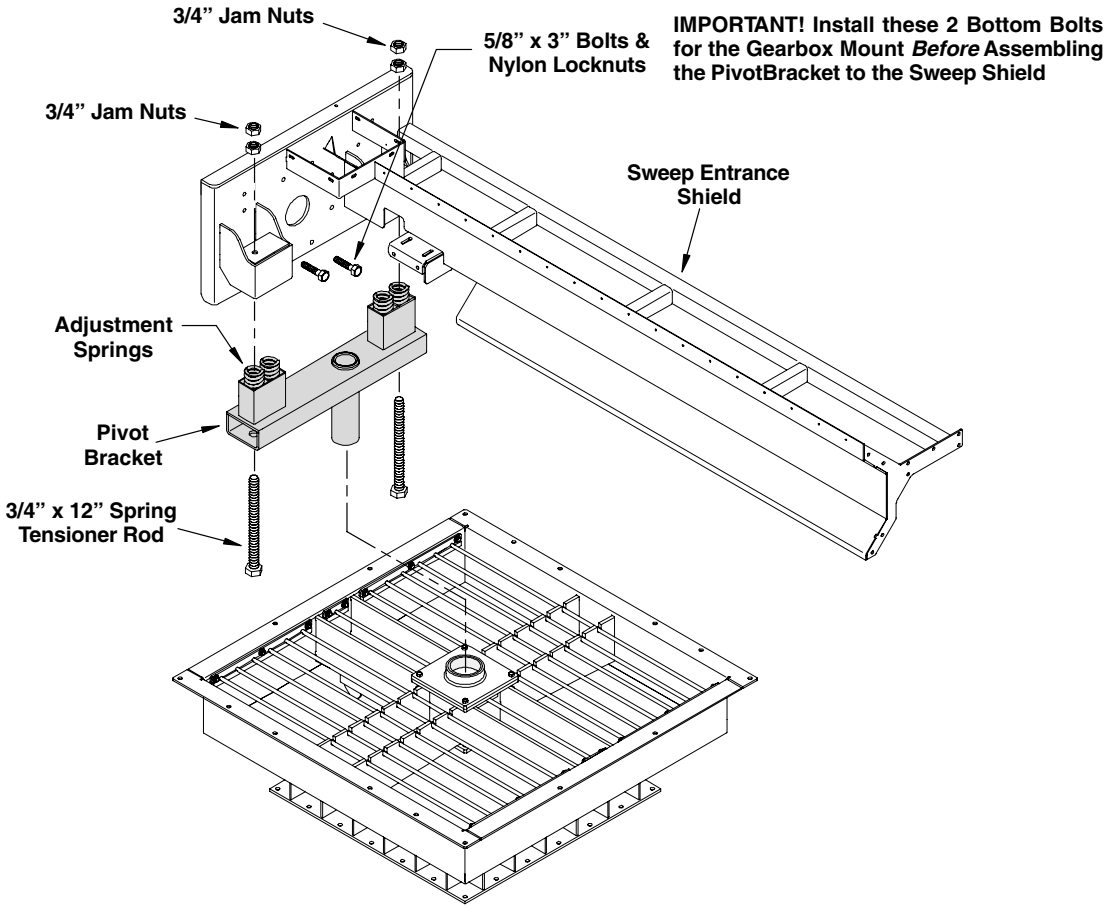

## 10:1 GEARBOX & DRIVE ASSEMBLY

**CAUTION! Keep the assembly and work area clean and free of tools and objects which could cause trip hazards or other unsafe situations.**

**To help prevent personal injury, always use the proper protective gear (ie. safety glasses, gloves, hearing protection etc.).**

**Some parts and components are heavy, use assistance with lifting and while assembling these parts.**

1. Install the gearbox to the entrance sweep shield. Secure using the 5/8" x 3" bolts and nylon locknuts provided (two of the bottom bolts were previously installed when assembling the pivot bracket to the sweep shield).
2. Insert the gearbox output shaft and 7/8" x 7 1/2" long key into the gearbox as shown in the illustration below. Secure the shaft using one (1) 1" x 2 1/2" bolt, lock washer and the 4 1/2" dia. x 1/2" thick keeper plate (large washer).
3. Mount the electric motor onto the gearbox with the legs of the motor facing towards the sweep shield (See illustration below).

   Secure the motor using the Allen head bolts and lock washers provided with the gearbox.

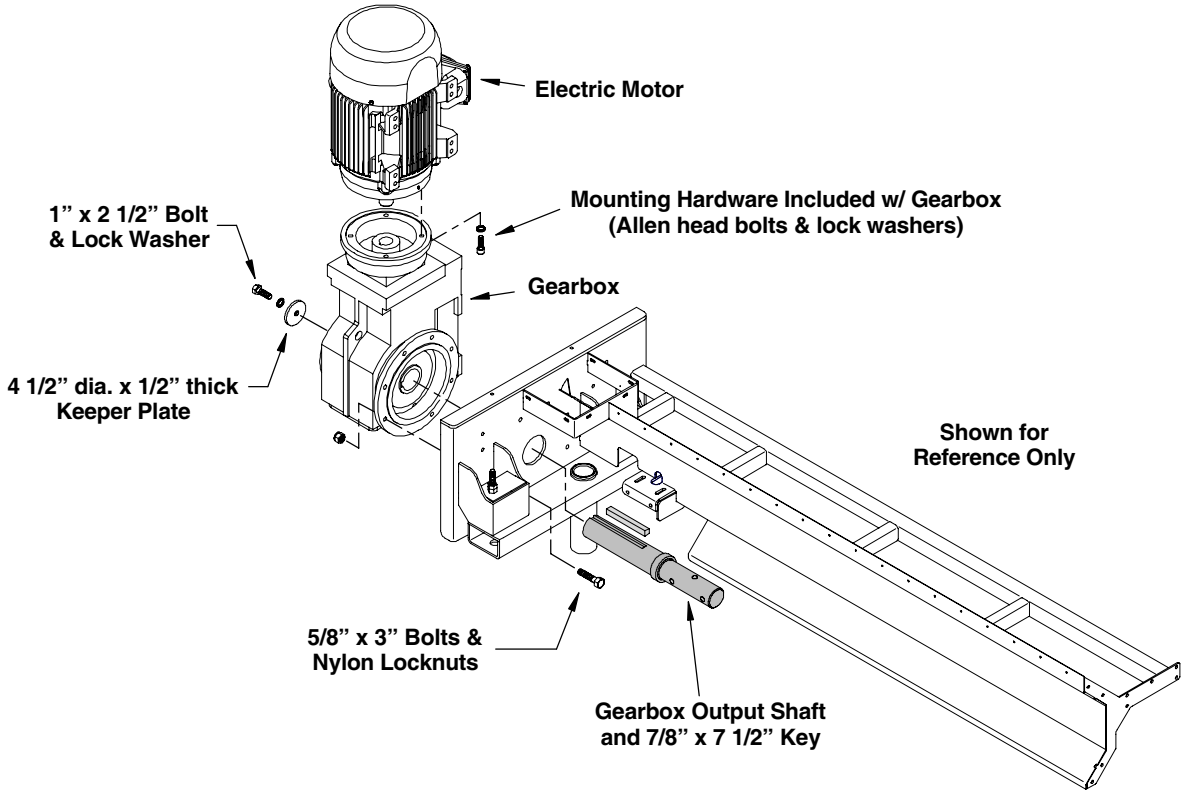

## SLIP RING & FIRST FLIGHT ASSEMBLY

Electrical wires for the slip ring are 8 ft. leads already connected to the slip ring. The wires protruding from the side will connect to the sweep motor later in the assembly process. The bottom wires will connect to the power source, route them as detailed below.

1. Pass the bottom set of wires through the top slip ring mount, the mount tube, down through the pivot tube and out the bottom of the center well.
2. Attach the slip ring top mount plate to the slip ring cannister using 3/8" x 1 1/2" bolts and nylon locknuts (See illustration below).

   Install the mount tube into the sleeve on the bottom of the top mount plate until it is flush with the top side of the plate. Secure tube to the plate using three (3) 3/8" x 3/4" setscrews.
3. Insert the mount tube through the pivot bracket opening, from beneath the center well, slide the bottom slip ring mount plate over the wires and insert the mount tube into the sleeve on the plate.
4. Secure mount plate to bottom of center well using 3/8" x 1 1/2" bolts and nylon locknuts.
5. Secure the mount tube to the plate using three (3) 3/8" x 3/4" setscrews.

   There is a small channel near the bottom of the center well that is specifically used for routing the wire and conduit out through the side of the center well.

   **Electric motors and controls shall be installed by a qualified electrician and must meet the standards set by the National Electric Code and all local and state codes.**
6. Apply a layer of anti-seize compound to the gearbox output shaft. Install the first flight section onto the shaft and secure using three (3) 3/4" x 5" bolts and side depress locknuts.

   Place a block or similar support at the end of the flight and shield section to help keep them supported as the assembly process continues.

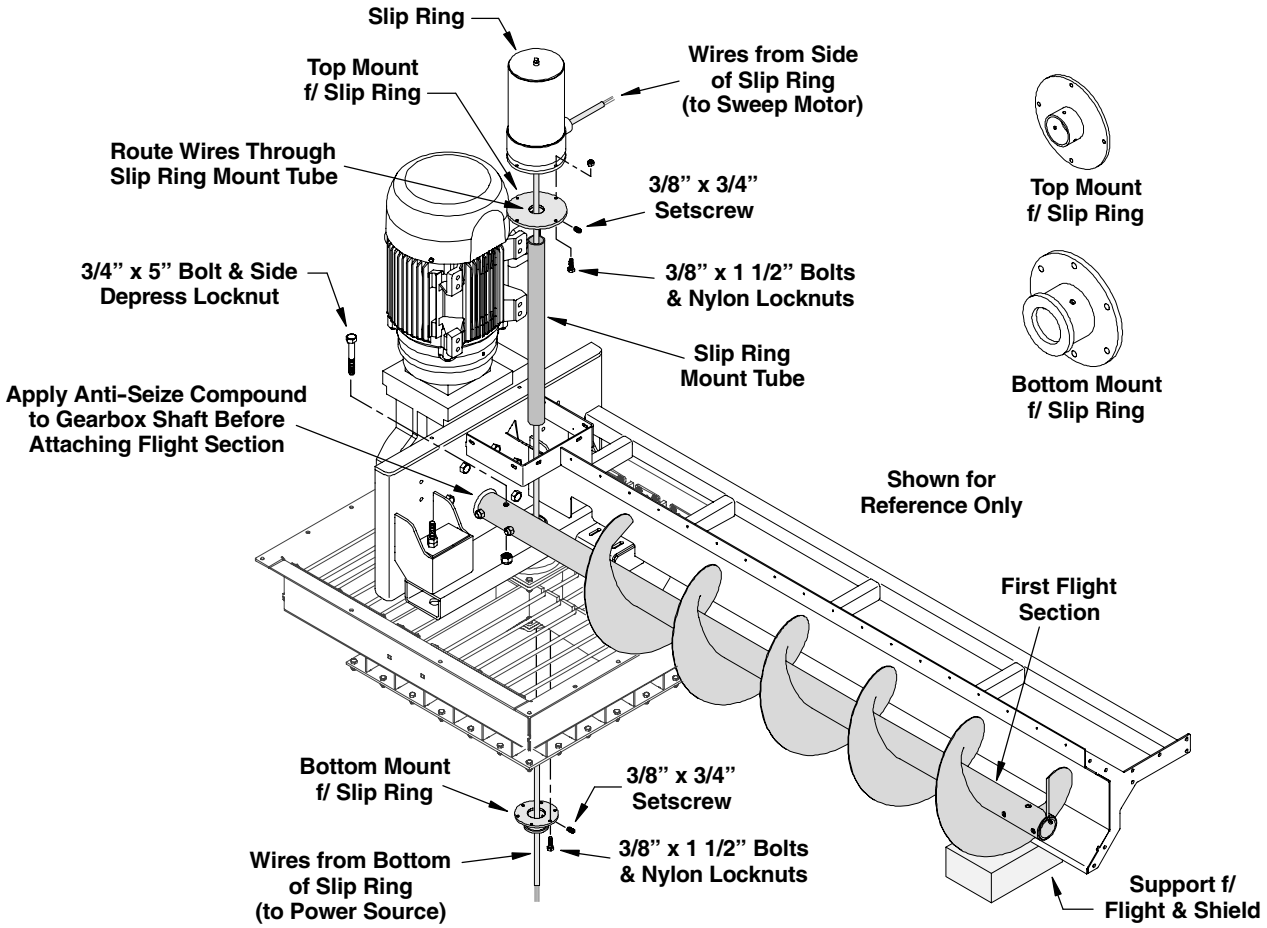

## MOTOR COVER ASSEMBLY

1. Install the motor mount plate to the legs of the motor using eight (8) 1/2" x 2" bolts, flat washers and nylon locknuts (flat washers over slotted holes).

   The bottom of the motor mount plate also attaches to the head plate (See illustration below), use two (2) 3/8" x 1 1/2" bolts and nylon locknuts to secure motor mount plate to head plate.

2. Attach the slip ring side covers to the motor mount plate as shown below. The side cover with the large opening will mount on the slip ring side with protruding wires. Route wires in conduit and make connection to the motor before securing cover to mount plate.

   **Electric motors and controls shall be installed by a qualified electrician and must meet the standards set by the National Electric Code and all local and state codes.**

   The side covers attach to the motor mount plate using six (6) 3/8" x 1" bolts, lock washers and flat washers (the bolts thread into a weld-nut already on the motor mount plate).

   The bottom of the side covers attach to the head plate using two (2) 3/8" x 1 1/4" bolts, flat washers and nylon locknuts for each cover.

3. After the side cover has been installed and wiring completed, install the conduit cover to the side cover using five (5) 3/8" x 1" bolts and lock washers (bolts will thread into the weld-nuts on the side cover).

4. Install the slip ring front cover to the side covers. Secure using twelve (12) 3/8" x 1" bolts, lock washers and flat washers (these bolts also thread into weld-nuts already on the covers).

   The bottom of the front cover attaches to the head plate using two (2) 3/8" x 1 1/4" bolts, flat washers and nylon locknuts.

5. Attach the motor cover to the motor mount plate as shown in the illustration below. Secure cover using four (4) 1/2" x 1 1/4" bolts and nylon locknuts.

6. Install the motor cover supports (one on each side of cover). Secure the supports to the motor cover using two (2) 1/2" x 1 1/2" bolts, flat washers and nylon lock nuts for each support.

   Secure the bottom of the supports to the head plate using two (2) 1/2" x 1 1/2" bolts and nylon locknuts for each support.

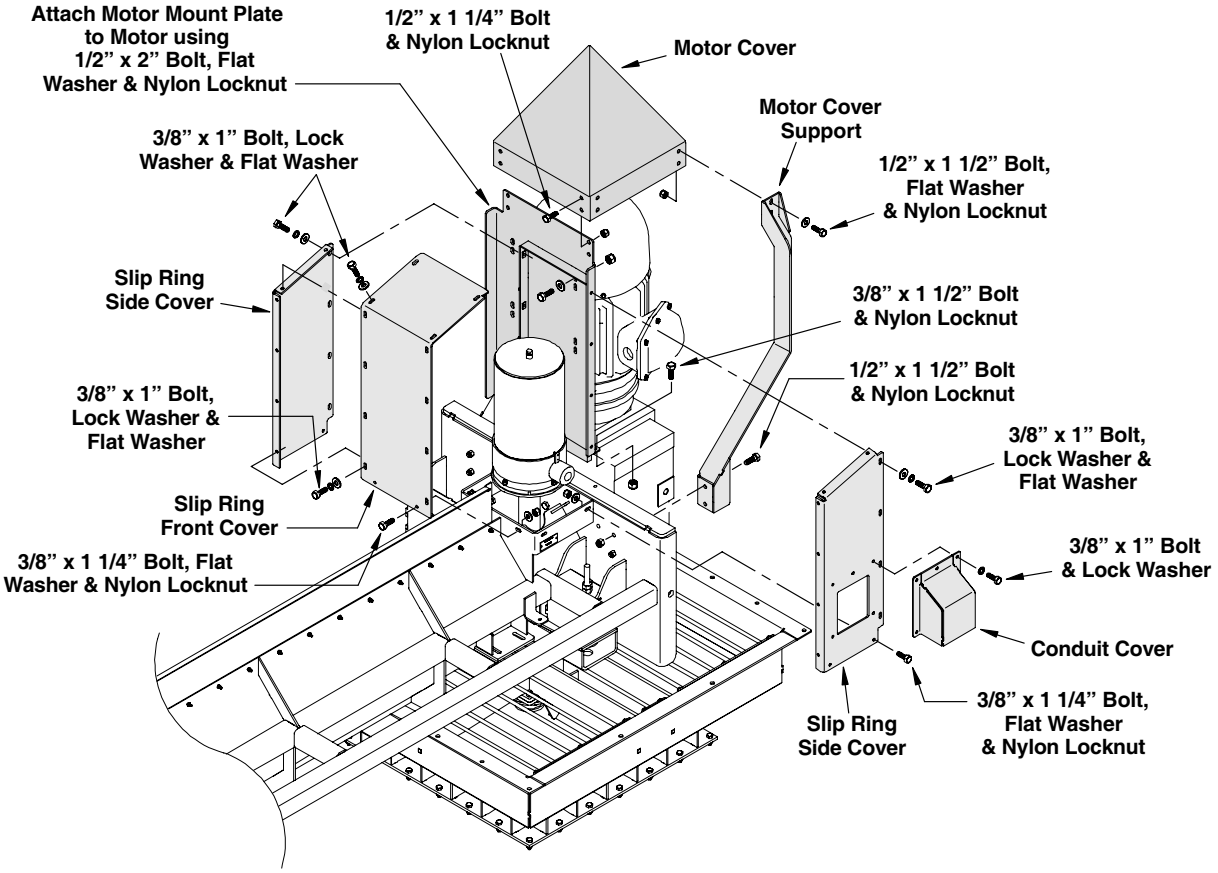

## SHIELD ASSEMBLY

The shields used with this equipment come in various lengths and depends on what diameter of bin the unit will be installed in. Some applications may only have three shield sections and some may have six.

**Each shield bundle is specific to the particular diameter of a bin, meaning the correct number and length of shields and flights are proportionate to bin diameter.**

The shields come in 94" *(2.39 m)*, 97" *(2.46 m)* and 104" *(2.64 m)* lengths. The flight sections also come in these lengths.

**The entrance shield is the same for all applications.** When installing the other shields, it does not matter which shield goes first or which second, they can be installed in any order. **Except if the unit is equipped with the drag system. When equipped with this system, the 104" shield has to be the last one installed.**

Also take into consideration that at the end of each shield section is the bearing stand with wheel. When determining the order of shield assembly, ensure the placement of the shields does not allow the wheel to pass over any intermediate wells or other obstacles that may hinder the sweeps movement or cause damage to any equipment.

1. Position the bearing stand w/ wheel at the end of the first shield section as shown in Fig 8.

   Place the next adjoining shield against the bearing stand (put wood blocks or other type of supports under the shield to help keep it in place during the assembly process).

2. Secure both shields to the bearing stand using nine (9) 1/2" x 5 1/2" bolts and nylon locknuts.

   Continue this process until all shields have been installed. To help keep shields level, adjust the bearing stand wheels after each section is installed.

   The last shield section will only have the bearing stand connected to it.

***SHIELD ASSEMBLY (con't.)***

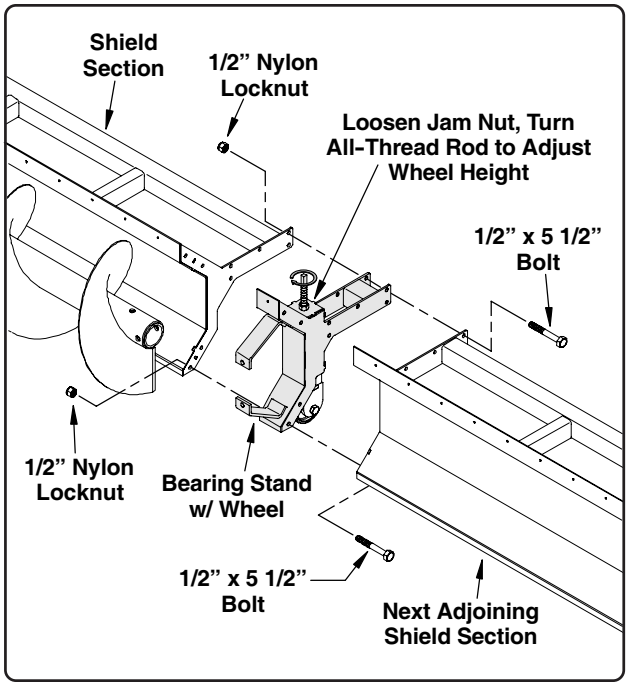


**Fig. 8**

## FLIGHT ASSEMBLY

The flight sections come in the same lengths as the shield sections. When shield placement has been determined, install the flight sections to the same length of shield ensuring the end of each flight is supported by the bearing stand.

1. Loosely install the nylon bearing and retainers to the bearing stand using two (2) 1/2" x 2" bolts and nylon locknuts (See Fig. 9).
2. Apply an anti-seize compound to the stub on the next adjoining flight section. Insert the stub through the nylon bearing and into the first section of flight. Secure the flight using three (3) 3/4" x 5 1/2" bolts and nylon locknuts.
3. Secure the nylon bearing and retainers. Place some type of support at the end of the flight to help keep it level.
4. Continue this process until all flight sections have been installed. When the last flight section is installed a connecting stub will be used to make the connection to the bearing stand (See Fig. 10).

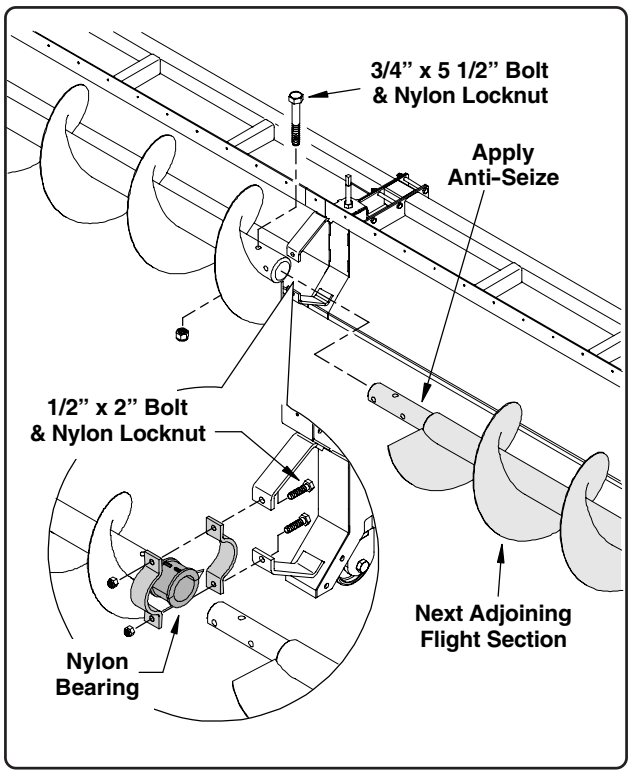


Fig. 9

### FLIGHT ASSEMBLY (con't.)

5. Loosely attach the nylon bearing and retainers to the bearing stand using two (2) 1/2" x 2" bolts and nylon locknuts.
6. Apply an anti-seize compound to the 11 3/4" long connecting stub and insert the stub through the nylon bearing and into the end of the previously installed flight.

   Secure the stub using three (3) 3/4" x 5 1/2" bolts and nylon locknuts.
7. Secure the nylon bearing and retainers to the bearing stand.

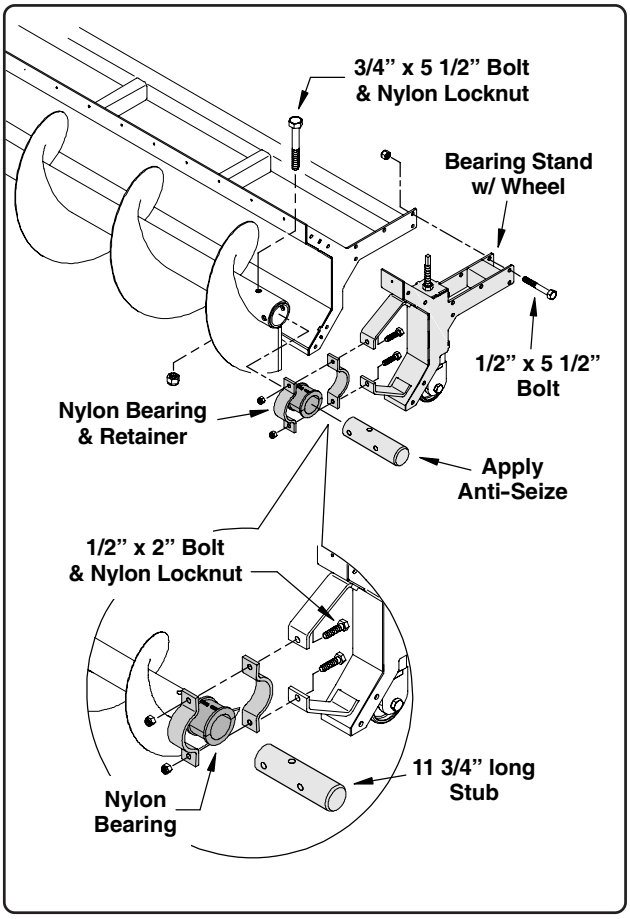


Fig. 10

## BACK SHIELD ASSEMBLY

The back shield sections come in the same lengths as the sweep shield and flight sections. When sweep shield assembly has been completed, install back shield sections to the appropriate length of sweep shield.

1. Secure the back shields to the sweep shields using 1/4” x 1 ‘ bolts, flat washers and nylon locknuts (the flat washers will be against the shield side).
2. Secure the tops of the back shields to each other using 1/4” x 1” bolts with two flat washers for each bolt and nylon locknuts (the flat washers will go against each side of the back shield.

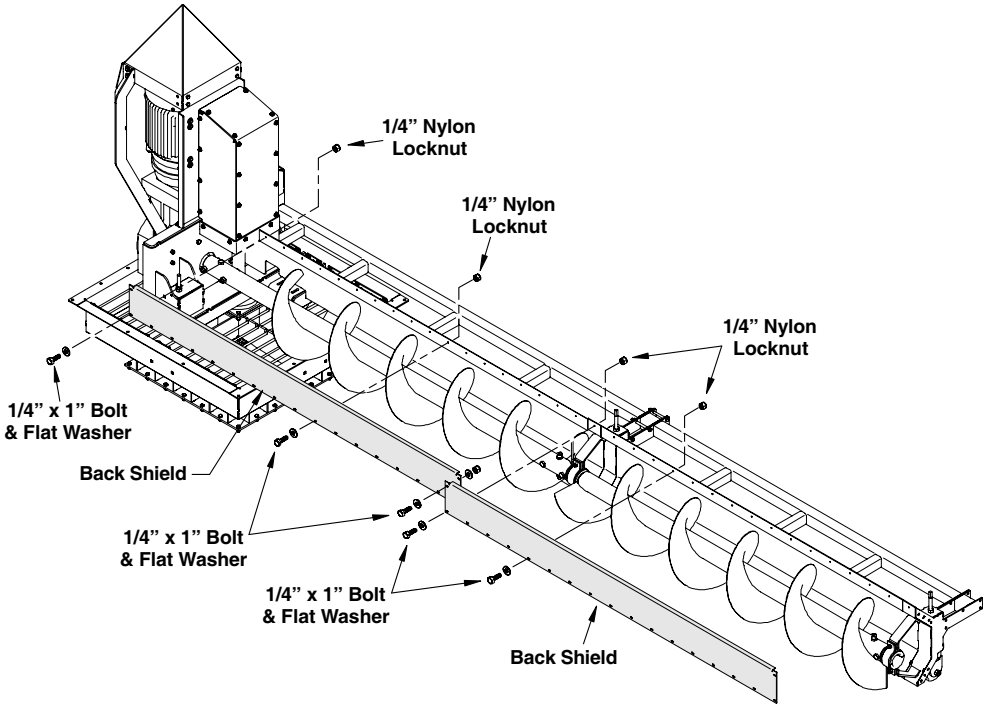


## INSTALL TRACTOR(S)

**Note: If using the drag option, install the drag prior to installing the tractor(s).**

Refer to the assembly instructions that were provided with the tractor. The tractor(s) should be assembled as near its sweep location as possible.

1. Install the pivot mount to the attachment bracket on front of the tractor. Secure the mount using the pivot pin,the pivot pin retainer and one 3/8” x 2 1/2” bolt and nylon locknut (See Fig. 11).
2. Attach the mount bracket to the sweep shield frame using the clamp plate and 1/2” x 5” bolts, flat washers and nylon locknuts.

   The attachment bracket and the mount plate can be adjusted up or down to allow proper alignment with the sweep shield.

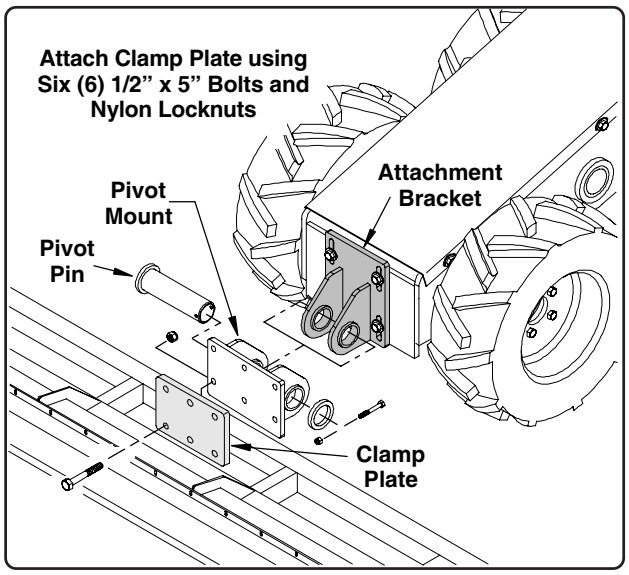


Fig. 11

***INSTALL TRACTOR(S) (con't.)***

## *SWEEP TRACTOR LOCATIONS*

The illustrations below show the typical location for the tractor(s) as determined by the number of shield sections. They are shown as reference only.

After they have been installed, it is recommended to measure the distance of the tractor(s) from the center well. The measurement(s) will be used when setting the parameters into the electrical control panel (See Pages 39 & 41 for points from which measurements will be taken and to record those measurements into the chart on Page 38).

**IMPORTANT! Do Not allow the tractor tires to pass over intermediate wells. If necessary, the tractor(s) can be repositioned to miss the wells, but keep them as close to their intended location as possible.**

**IMPORTANT! Do Not allow the tractor to drive over any intermediate well.**
**Depending on intermediate well location tractor can be moved towards the center of bin to pass by the well.**
**If intermediate well is far enough away from bin wall to allow tractor to be moved towards bin wall, relocate tractor but keep a minimum distance of 4' from the bin wall.**
**It's possible the weights or the rear of the tractor could strike the bin wall as it travels around the bin if the tractor is located too close to the wall.**

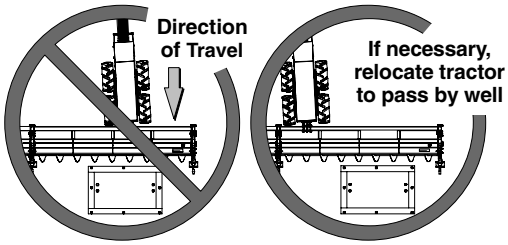


**Units with 3 Flight and Shield Sections**

**Units with 4 Flight and Shield Sections**

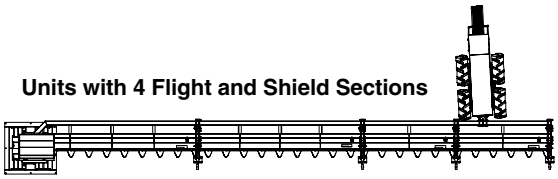

**Units with 5 Flight and Shield Sections**

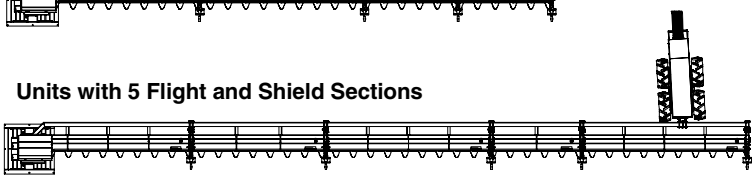

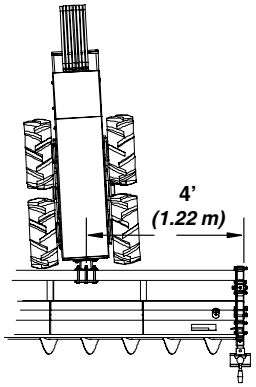


**4' *(1.22 m)* from end of bearing support to center of tractor clamp (minimum)**

**Units with 6 Flight and Shield Sections**

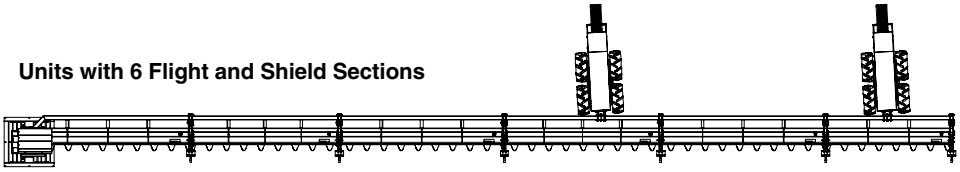

**Units with 7 Flight and Shield Sections**

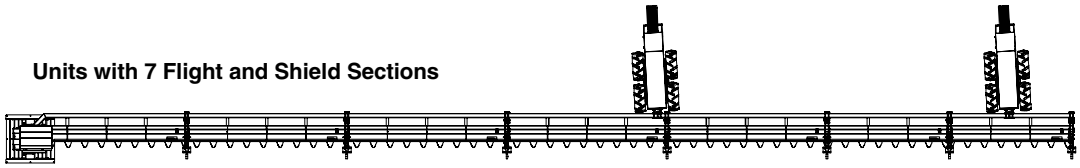

**Units with 8 Flight and Shield Sections**

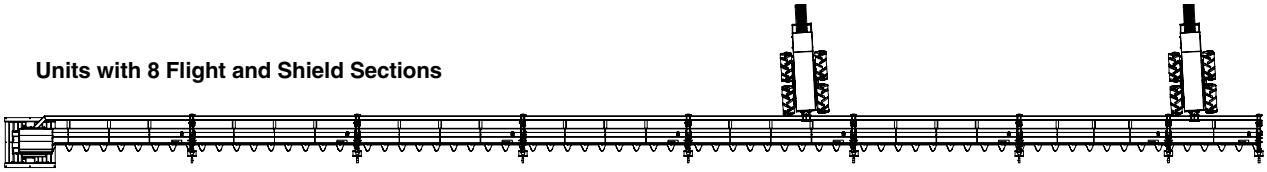

## DRAG SECTION ASSEMBLY

The drag sections should be assembled as close to the sweep assembly as possible, this will help not having to move either the drag system or the sweep assembly a great distance when joining them together.

It is recommended to assemble the drag sections together before installing onto the sweep system. There are a couple methods that work for assembling the sections and chain and paddles.

One method is to assemble the drag sections together, keeping the sections upright and use a wire, rope or similar item to pull the chain and paddles through each section (the access doors can be used to help route the chain and paddles over the return rollers, See illustration on Page 24).

Another method is to assembly the sections together, then flip them upside down to install the chain and paddles from the bottom side (See illustration on Page 25). This method can be useful as it allows easier access around the return rollers as well as when connecting the chain lengths together.

When completed the drag system and sweep auger should resemble the illustration below.

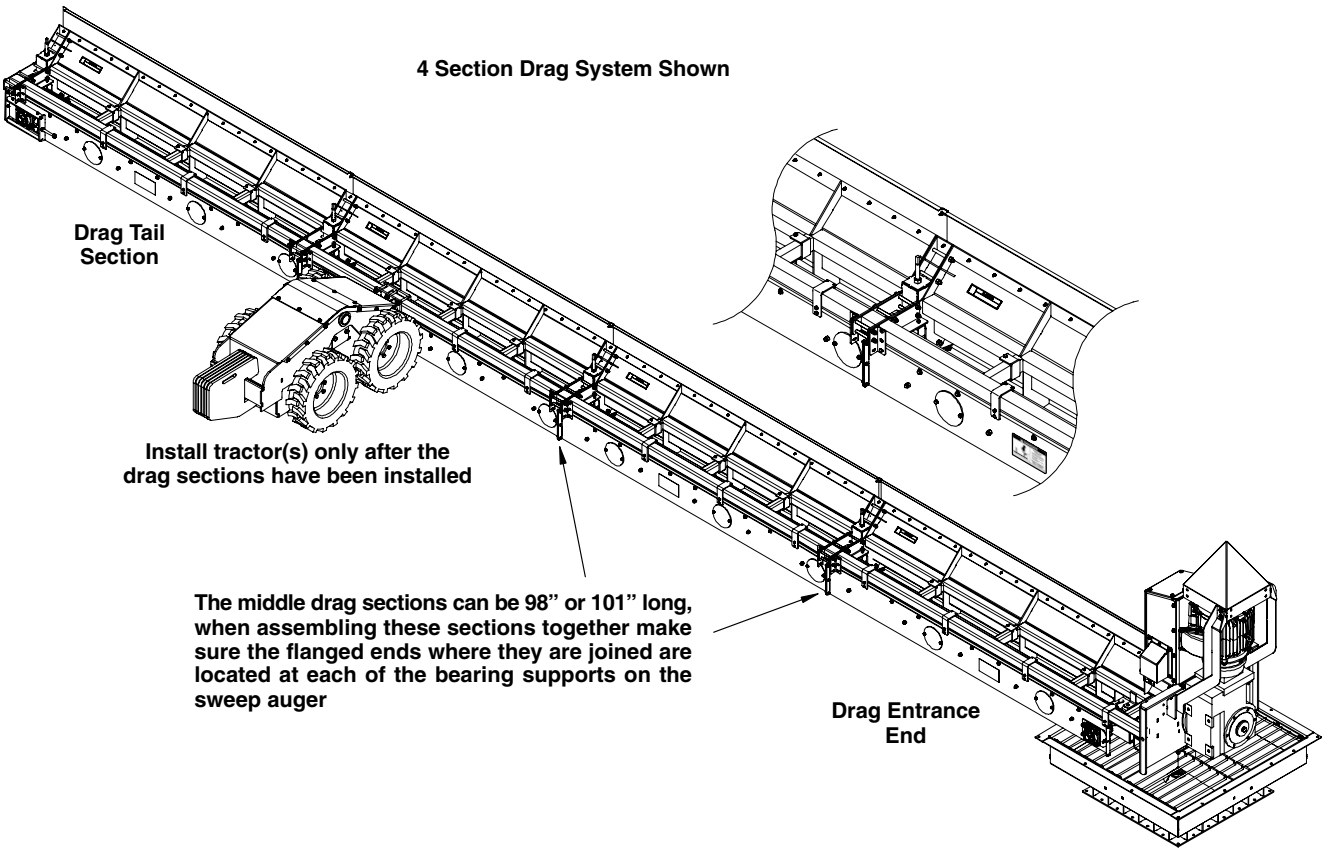

***DRAG SECTION ASSEMBLY (con't.)***

The **drag tail section** comes pre-assembled with return rollers, bearings and tail shaft w/ sprocket, **the middle sections** are pre-assembled with return rollers and **the entrance end section** is pre-assembled with return rollers and bearing.

1. Assemble the drag sections together (**entrance end** nearest bin center, **tail section** nearest bin wall, See illustration below). **The length of the middle section(s) need to match the length(s) of the sweep auger shields (this is so that when joined to the sweep auger, each drag section's connecting point is centered on the sweeps' support bearings as shown on Page 23).**

   Secure all drag sections together using 3/8" x 1" bolts and nylon locknuts.

2. Insert the 1 1/2" dia. end of the head shaft through the opening in the entrance end side panel on the opposite side of the bearing and slide the 5 5/8" dia. sprocket and 3/8" x 1 1/4" long key onto the shaft (it may be necessary to loosen the setscrew in the sprocket for shaft to pass through).

   Pass the end of the shaft through the bearing until the end of shaft is flush with the outside of the lock collar. Secure lock collar.

   Center sprocket onto shaft making sure key is positioned properly. Tighten setscrew to lock sprocket into place.

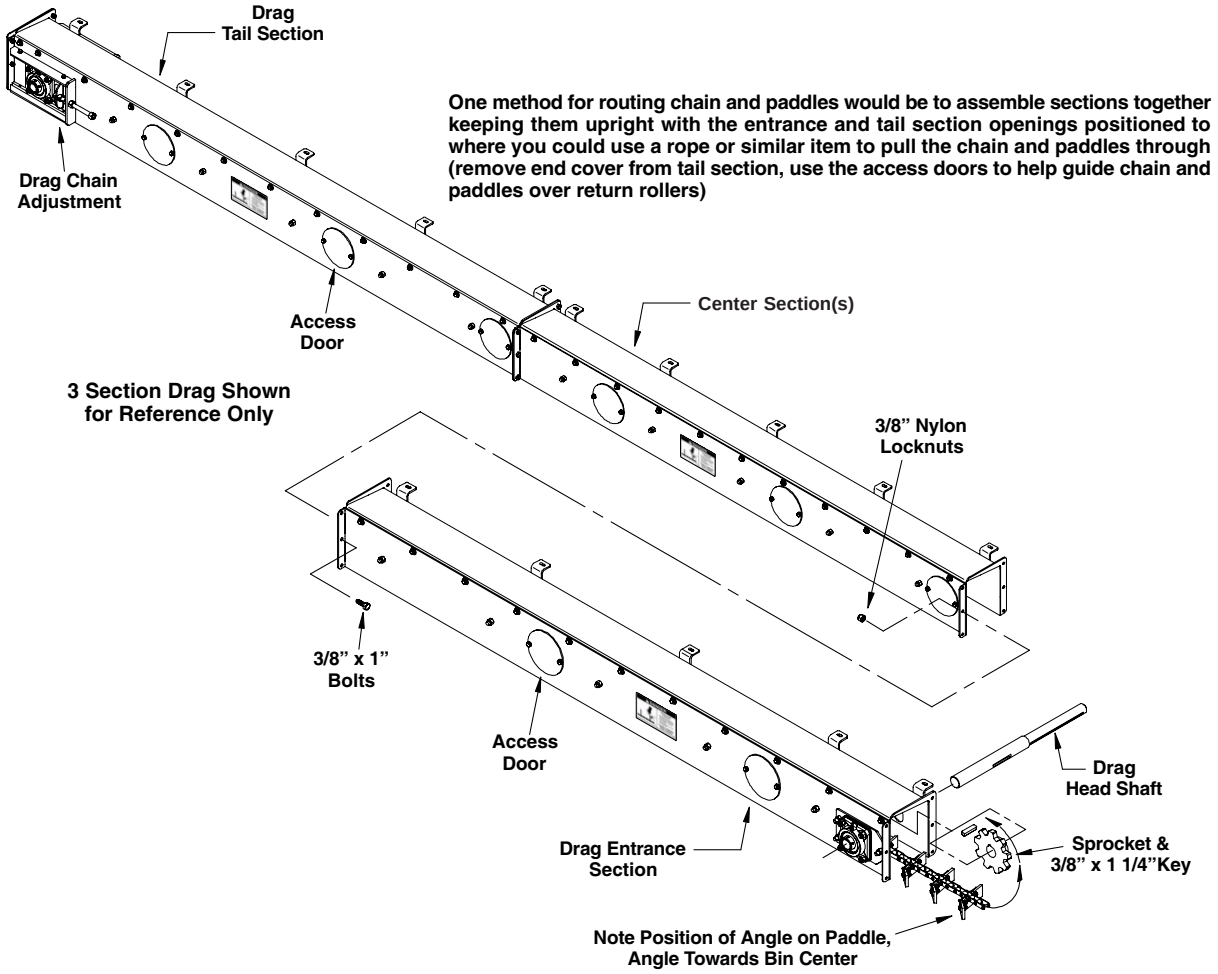

***DRAG SECTION ASSEMBLY (con't.)***

3. Before installing the chain, use the adjustment bolts and move the tail shaft sprocket as far back as adjustment allows.

   Route chain and paddles around entrance and tail section sprockets. This can be done in a couple different ways as stated earlier.

   Either leave sections upright and use rope or similar item to pull chain through each section, or flip sections over and route chain and paddles from bottom side as shown below.

   If using rope to pull chain and paddles through, remove the end cover from the tail section, use the access doors along the length of each section to help route the chain over the return rollers. Using the provided connecting links, continue until all sections of chains have been installed.

   **IMPORTANT! Note positioning of the angled edge of the paddles as shown in the illustration on Page 24, angle faces towards bin center.**

   If flipping the sections over is the desired method, it is recommended to start one section of chain and paddles at the entrance end with the drag sections in the upright position and the paddles oriented in the proper direction (angle towards bin center). Then, keeping the length of chain and paddles in place, flip the sections over and continue to route the remaining lengths of chain so they remain oriented the same as the first length of chain installed.

4. **Note: It may be necessary to remove one or more links of chain in order for the chain to achieve proper tension.**

   After the chain and paddles have been installed, position drag sections so they are upright.

   Using the adjustment bolts, turn both sides equally in small increments until desired tension is achieved.

   Naturally the chain and paddles will sag and contact the bin floor even with the drag mounted to the sweep auger, just make sure there is minimal slack in the upper chain sections as they cross over the return rollers. You will need to have the drag sections in the upright position to determine proper tension.

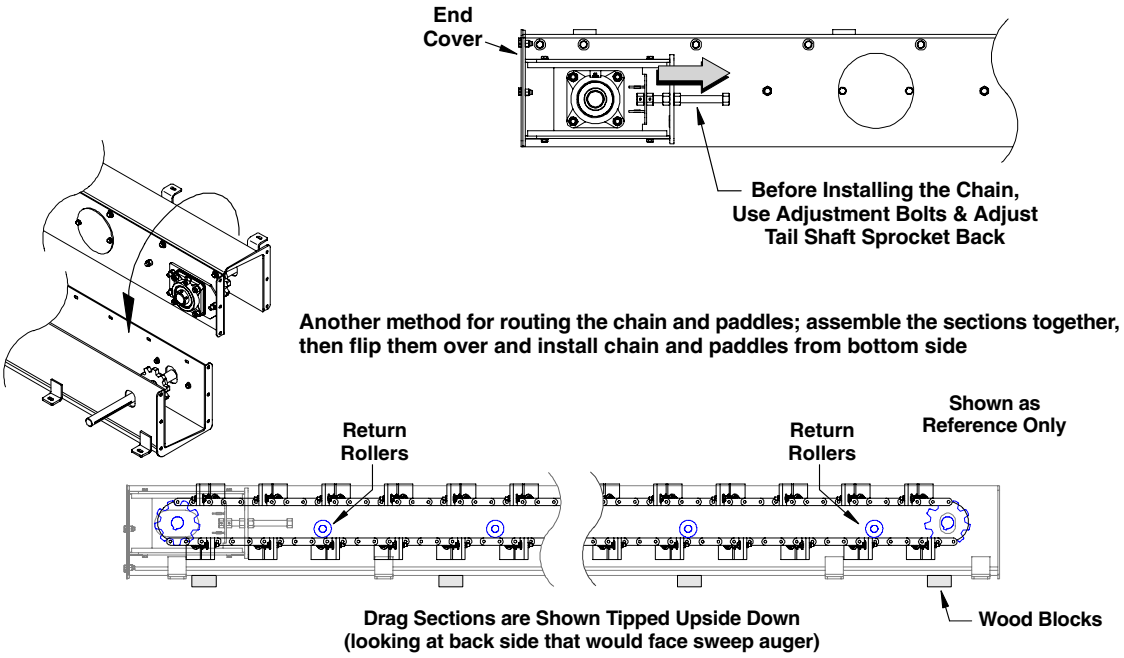

***DRAG SECTION ASSEMBLY (con't.)***

### Attach Drag Sections to Sweep Auger

1. With the drag section in the upright position, slide the sections into position along the back side and under the sweep auger.

   Align the first mounting tab on the entrance end section with the tab welded onto the sweep shield frame (See Fig. 12 below). Insert a 3/8" x 1 1/4" bolt through the mount tabs and secure with 3/8" flat washer and 3/8" nylon locknut (leave hardware loose at this time).

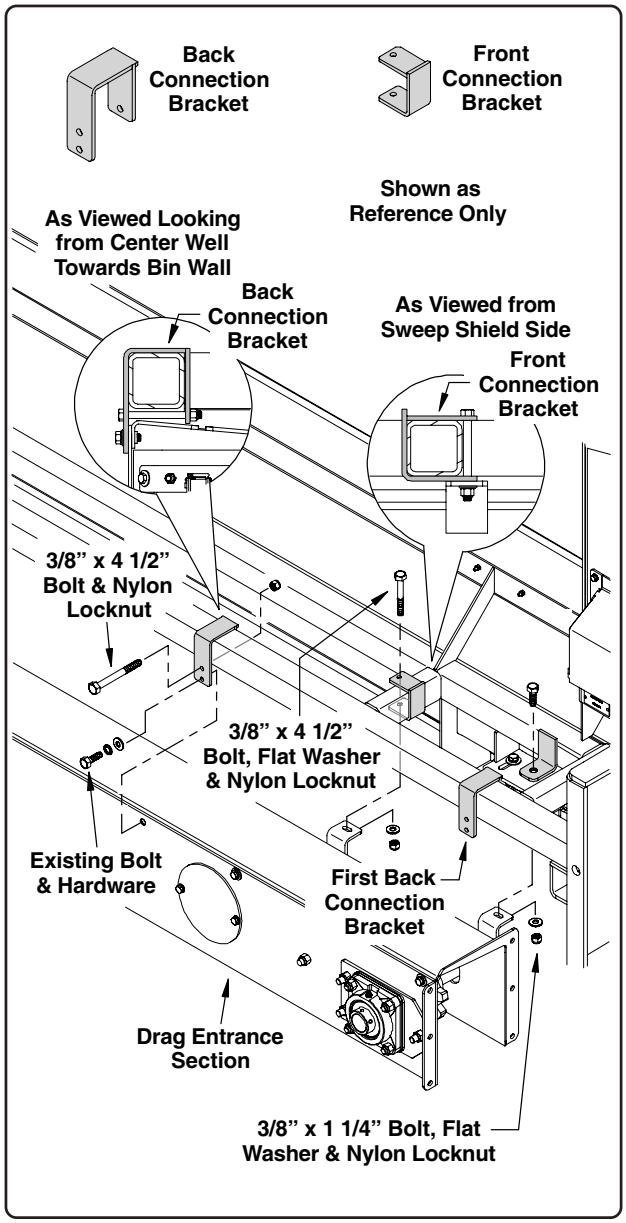


**Fig. 12**

2. Continue along the length of the drag sections installing a front connection bracket onto each of the shield crossmember tubes (the brackets will be positioned over each of the mounting tabs welded to the drag sections, See Fig. 12).

   Loosely secure the brackets using 3/8" x 4 1/2" bolts, flat washers and nylon locknuts.

3. Install the back connection brackets along the length of the sweep shield frame. The back shield brackets will be installed at every third existing bolt along the drag sections as shown in Fig. 12 and on Page 23 (when the third bolt ends up on the flanged end connection point of the sections, continue to the next available bolt).

   Remove the existing bolt, flat washer and lock washer on the back of the drag section and insert into the bottom hole of the bracket (See Fig. 12).

   Use a 3/8" x 4 1/2" bolt to secure the bracket to the sweep shield frame (the bolt will be positioned between the sweep tube frame and top of the drag section, See Fig. 12). This hardware can remain loose until the drag is completely installed.

4. The front and back bearing stand connection brackets will be installed at each of the sweep shield bearing stand locations.

   It will be necessary to remove the existing bolts securing the sweep shield to the bearing stands and replace them with the 1/2" x 6" bolts when installing the brackets (See illustration on Page 27).

5. Remove the two bearing stand bolts at the back side of the bearing stand, and remove the two existing 3/8" x 1 1/4" bolts, flat washers and lock washers nearest each side of the flanged connection points of the drag sections.

   Position the back bearing stand brackets (smaller diameter slots down) onto each side of the bearing stand and loosely secure using the 1/2" x 6" bolts provided. Loosely secure the bottom slots with the existing 3/8" x 1 1/4" bolts, flat washers and lock washers previously removed.

6. Remove the three bearing stand bolts and install the front bearing stand connection brackets as shown below (one on each side of the bearing stand).

   Secure using the 1/2" x 6" bolts provided and secure the lower front hole of the bracket to the mounting tab on the drag section using one 3/8" x 1 1/4" bolt, flat washer and nylon locknut.

***ATTACH DRAG SECTIONS TO SWEEP AUGER (con't.)***

7. After all brackets have been installed, begin by tightening all the bearing stand brackets, then continue tightening the connection brackets on the crossmembers and sweep shield frame.

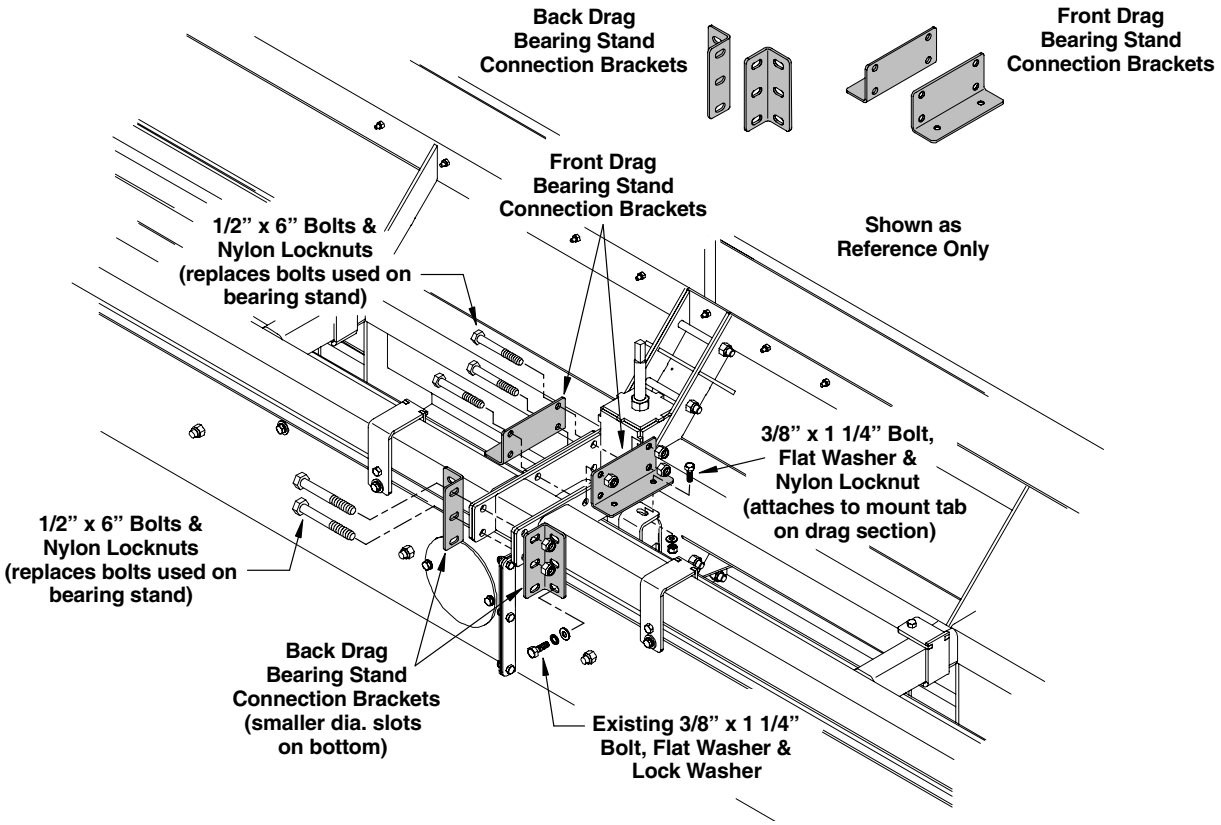


8. **IMPORTANT! The gearbox is shipped <u>without</u> oil installed. Oil must be added before sweep operation.** Remove the plastic plug from the top of the drag gearbox. Add 24 oz. *(0.71 L)* of a GL 5EP 220 gear oil or equivalent (Refer to the Lubrication & Maintenance Section in this manual, and to the manual provided with the gearbox for further information on service & maintenance).

9. Install the bushing and vent plug into the 90° elbow and secure to the top of gearbox (See Fig. 13).

10. Apply a thin coat of anti-seize compound to the gearbox shaft. Install and secure the 11 tooth sprocket and 1/4" x 1 1/2" key onto the shaft (hub of sprocket facing outside, See Fig. 13).

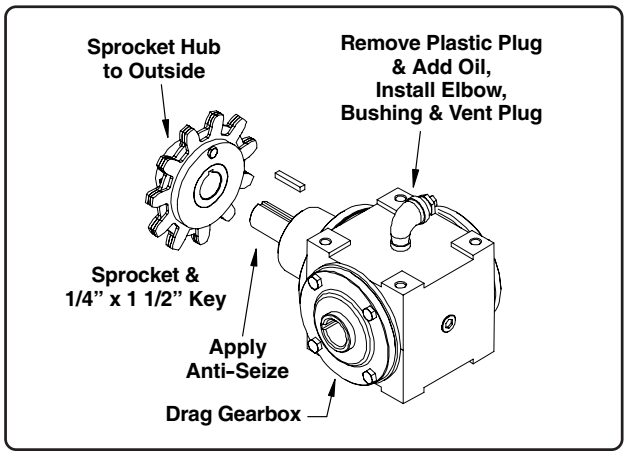


**Fig. 13**

***ATTACH DRAG SECTIONS TO SWEEP AUGER (con't.)***

10. Apply a thin coat of anti-seize compound to the head shaft protruding from the drag entrance end. Insert the 1/4" x 4" key into the keyway and slide the gearbox onto the shaft with the sprocket facing towards the center well.

    Loosely secure the gearbox to the mounting plate using 1/2" x 1 1/4" bolts, flat washers and lock washers. Thread a 1/2" non-lock nut onto each of the 3 1/8" long adjustment bolts and insert the bolts into the end of the gearbox mount plate as shown in Fig. 14 below (leave loose for now, adjustment will be made after the chain has been installed).

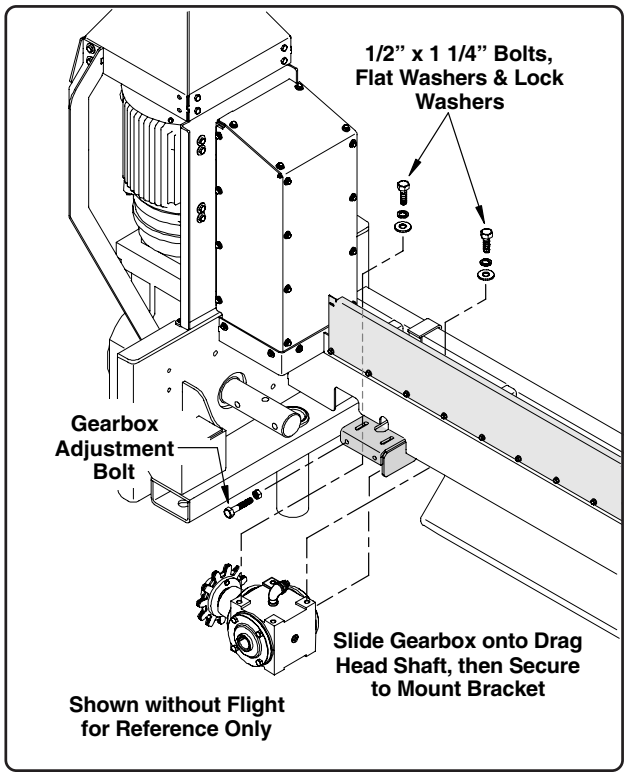


**Fig. 14**

11. Remove the existing 3/4" x 5" bolt securing the flight to the center well gearbox shaft (remove the bolt farthest from the gearbox, See Fig. 15).

    Install the split sprocket around the flight shaft and secure using the 3/4" x 5 1/2" bolt provided.

12. Secure the split sprocket together using 3/8' x 1" bolts and nylon locknuts.

13. Install the drag drive chain around the split sprocket and smaller sprocket on the drag gearbox. Connect chain together using the connecting link provided (a half link is also provided if necessary).

14. Tighten the chain using the adjustment bolts on the gearbox mounting plate. Tighten both bolts in equal increments until chain is reasonably snug.

15. Tighten gearbox to mounting plate. Ensure all hardware is tight before beginning operation.

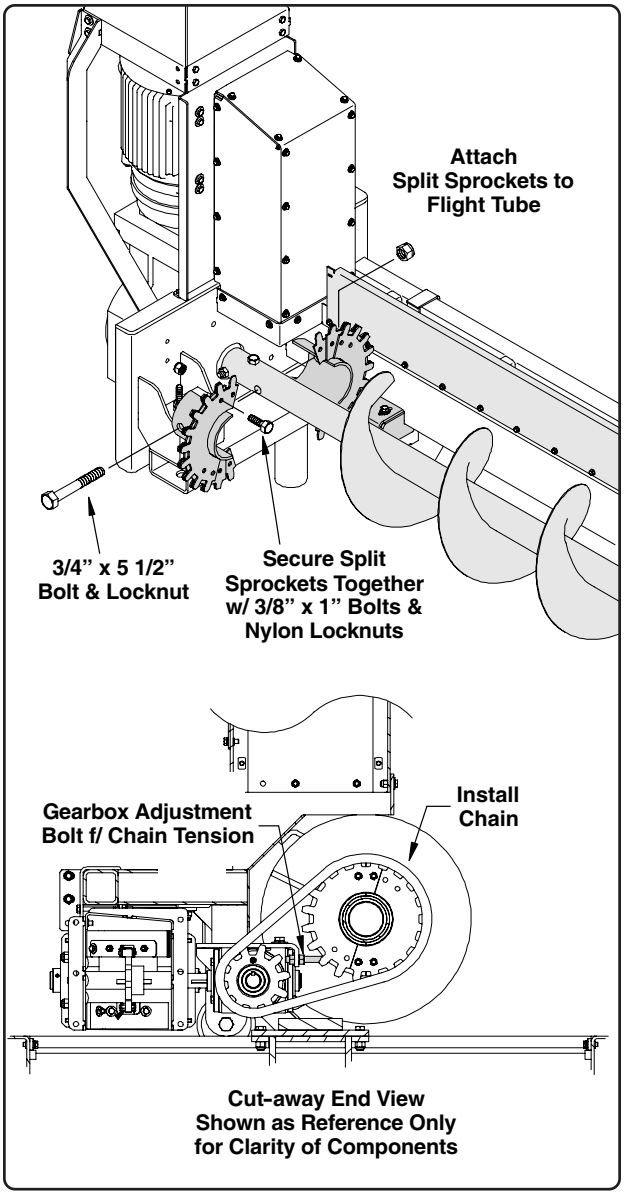


**Fig. 15**

**NexGen Model 3150**
**Control Panel**

The following pages are instructions for the set-up and operation of the sweep system's control panel.

All operating functions will be entered using the touch-screen on front of the control panel.

The control box is equipped with an Emergency Stop button. If this should ever need to be pushed, shutdown and lock out the power source before investigating the problem.

There is also a section for a "Final Klean" function. This function is used only if the Tru-Klean Drag Conveyor has been installed. If your application does not include the drag conveyor, disregard this procedure.

**Note: When setting the parameters for sweep operation, the distance the tractor(s) are from the center well will need to be entered. It is recommended to take the measurement(s) after initial installation of the tractor(s) is complete, or prior to control panel set-up. If the tractor(s) have already been installed and are operational, shutdown and lockout power source before entering the bin. Pages 39 & 41 show the points from which measurement(s) will be taken. Page 38 has a chart to record these measurements into.**

**Electric motors and controls shall be installed by a qualified electrician and must meet the standards set by the National Electric Code and all local and state codes.**

**WARNING! Before entering the bin, shutdown all unloading equipment and lock-out the power source.**

**Never enter the bin when the sweep auger is in operation.**

**Never attempt to control the operation of the sweep auger by pushing on it with brooms, shovels or other devices.**

**Stay clear of the under-floor unloading auger at the bin wells. The unload auger is exposed at these locations in the bin floor.**

**A main power disconnect switch that can be locked in only the "Off" position shall be provided. This shall be locked whenever work is being done to the sweep or any of its components.**

## CONTROL PANEL SET-UP

There will be 2 different display screens that will be used: “Home Screen” and “Set-up Screen.” When moving from Set-up screen to Home screen, it will take about **15 seconds for the screen to change**. A pop-up window will appear to inform you of this. (set-up screen can only be accessed when in the “hutch” mode).

“Hutch” mode will be used for the intial set-up for sweep operation using the Home and Set-Up Screens. Once parameters of intial set-up have been entered, all sweep operations will be activated in the “USER: OPERATOR” mode (with the exception of “sending sweep to home position”).

“Maint” mode will be used when sending the sweep to Home Position, See Page 51 (you will only have access to the Home Screen when in “maint” mode).

When the screen is in either the USER:HUTCH or USER:MAINT mode, and there is no activity on the screen for approx. 10 minutes, the screen will switch to USER:OPERATOR, simply start log-in again to the user mode desired.

Each time you switch to either mode, a password will be required. Password “2222” will be used for hutch mode and password “1111” will be used for maint mode. When logging-in with the password, an “invalid user” window may appear, If this should occur, simply touch the “X” in the pop-up and start log-in again.

## LOGGING IN & OUT

- **Log-In Administration (HUTCH) Mode**
  - Log-in will begin in the Home Screen as shown below.
  - Select **USER: OPERATOR** top middle of screen (it may be necessary to hold down for a moment then release in order for the security pop-up to appear)
  - The “Security Manager” screen will appear, select the green Enter arrow.

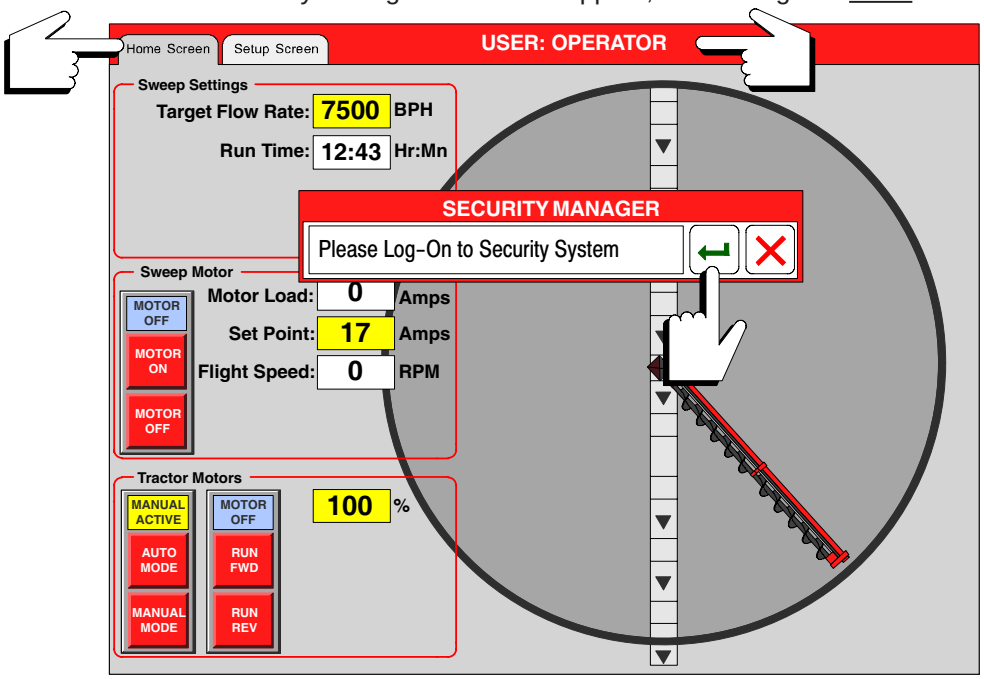

***Log-In Administration (Hutch) Mode (con't.)***

➢ The "Enter Username" screen will appear, enter "hutch" for initial set-up, then select the green Enter arrow.

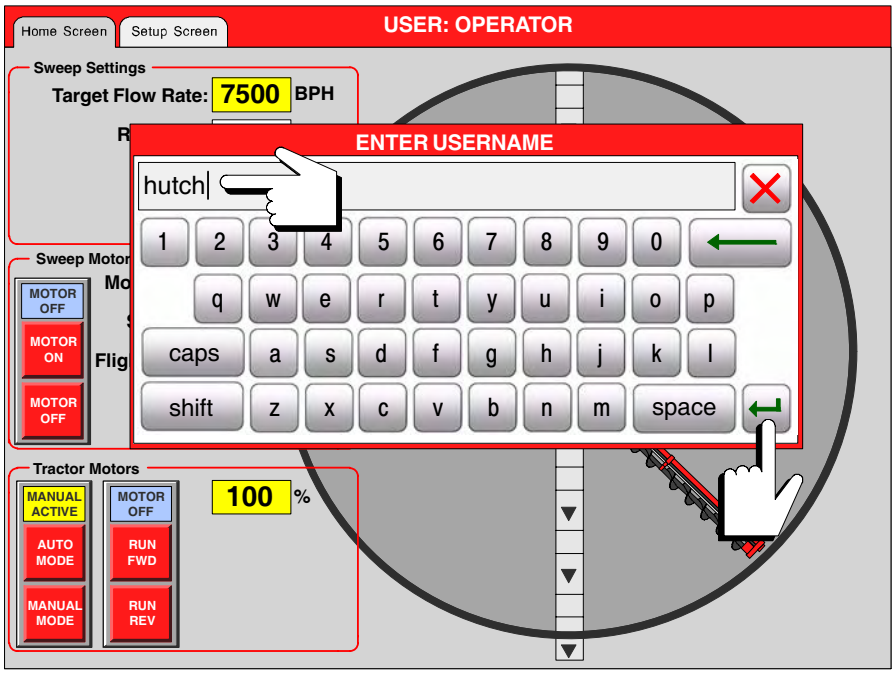


➢ The "Enter Password" screen will appear. Enter "2222" and select the green Enter arrow (the USER: OPERATOR prompt will change to USER: HUTCH).

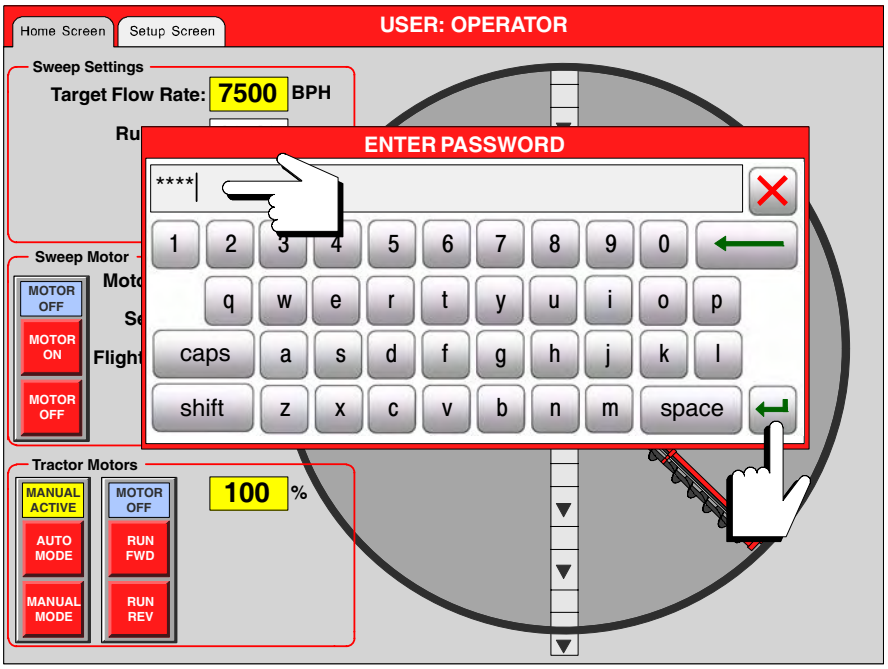


After entering the password and an "INVALID USER CREDENTIALS" window appears, simply press the "X" on the pop-up and start log-in again

***Logging In & Out (con't.)***

### ♦ Log-In Maintenance Mode

➢ Select **USER: HUTCH** prompt at top middle of screen (USER: HUTCH will change to USER: OPERATOR)

➢ The "Security Manager" screen will appear, select the green Enter arrow.

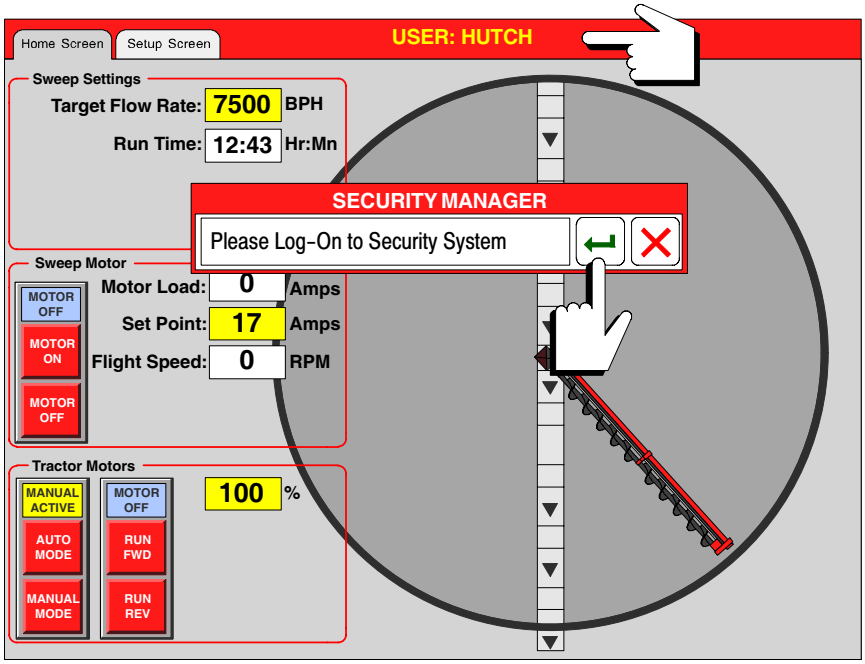


➢ The "Enter Username" screen will appear, enter "maint" for initial set-up, then select the green Enter arrow.

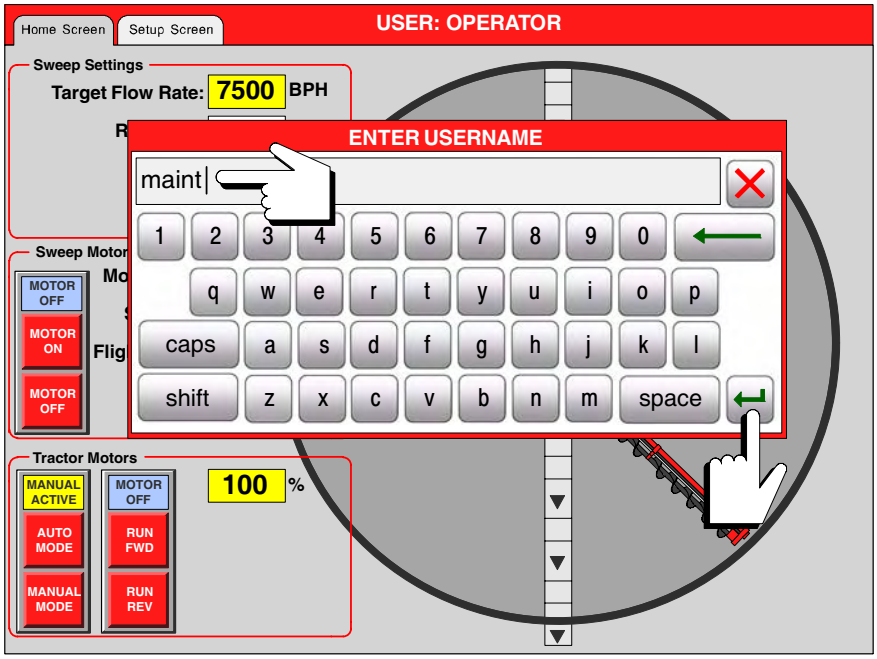

***Log-In Maintenance Mode (con't.)***

➢ The "Enter Password" screen will appear. Enter "1111" and select green Enter arrow (USER: OPERATOR will change to USER: MAINT)

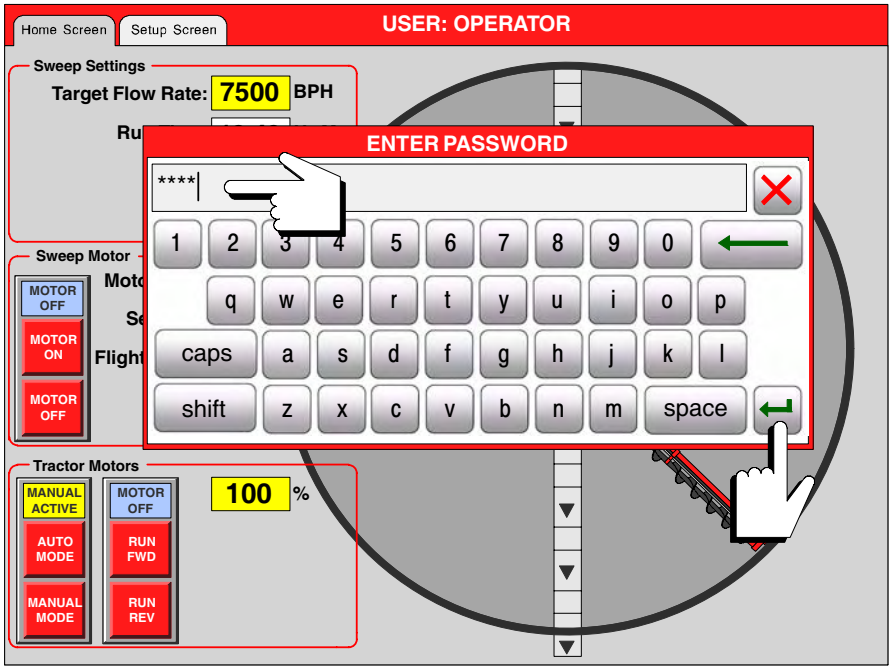


After entering the password and an "INVALID USER CREDENTIALS" window appears, simply press the "X" on the pop-up and start log-in again

*Logging In & Out (con't.)*

- **Log-Out**
  - Select **USER: MAINT** top middle screen.
  - The "Security Manager" prompt will appear. Select the "X" button. (User: MAINT will change to USER: OPERATOR)

  You can also log-out of any of the modes by selecting the prompt at top middle of screen and selecting the "X" when the security pop-up appears.

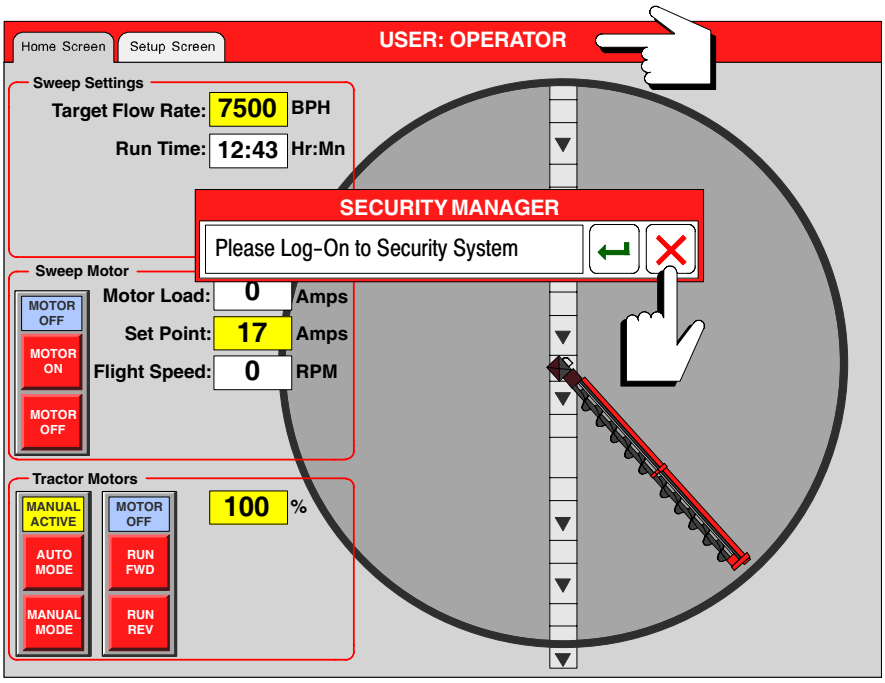


**Note: It is possible to switch from "maint" to "hutch" or vise-versa without the need to log out. Simply touch the "User" prompt at the top middle of the screen. You will then need to log into that particular mode using the same procedures described when logging into hutch mode and maint mode.**

## SWEEP SET-UP

- **Sweep Operation Set-Up**

  - Select **USER: OPERATOR** top middle of screen
  - The "Security Manager" screen will appear, select green Enter arrow.

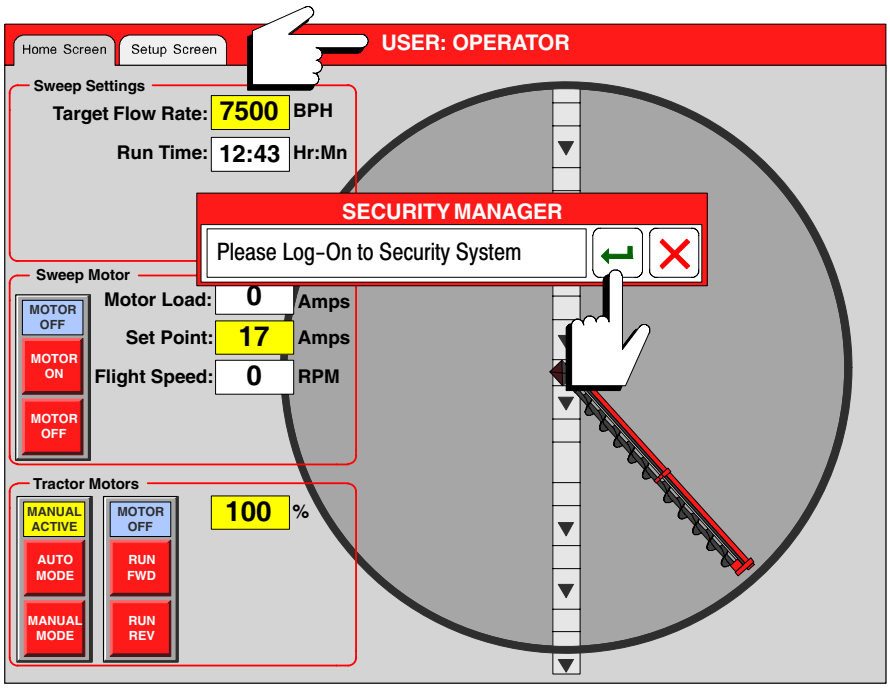


  - The "Enter Username" screen will appear, enter "hutch" then select the green Enter arrow.

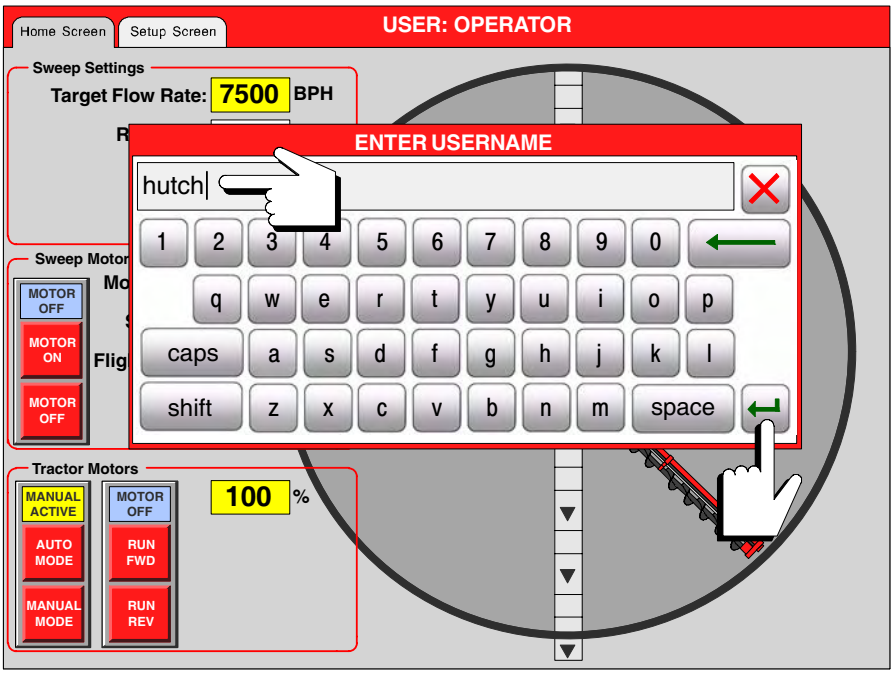

***Sweep Operation Set-Up (con't.)***

➢ The "Enter Password" screen will appear. Enter "2222" and select green Enter arrow (the USER: OPERATOR prompt will change to USER: HUTCH).

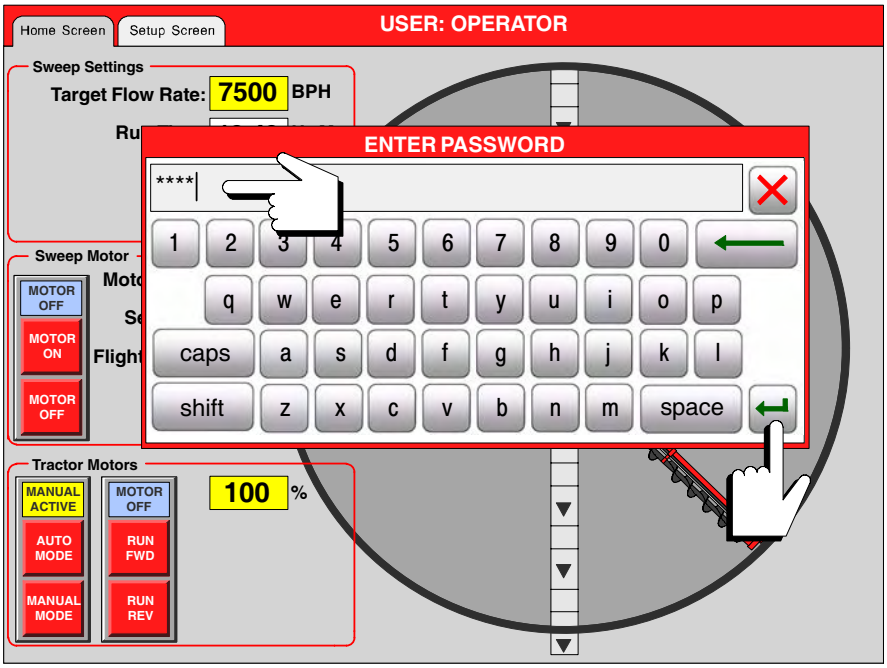


After entering the password and an "INVALID USER CREDENTIALS" window appears, simply press the "X" on the pop-up and start log-in again

***Sweep Operation Set-Up (con't.)***

- Select the "Set-Up Screen" tab.

♦ **Enter Bin Diameter**

- Select yellow box in the Bin Settings field.
- Enter the diameter of your bin in feet using the pop-up number pad.
- Select green Enter arrow.

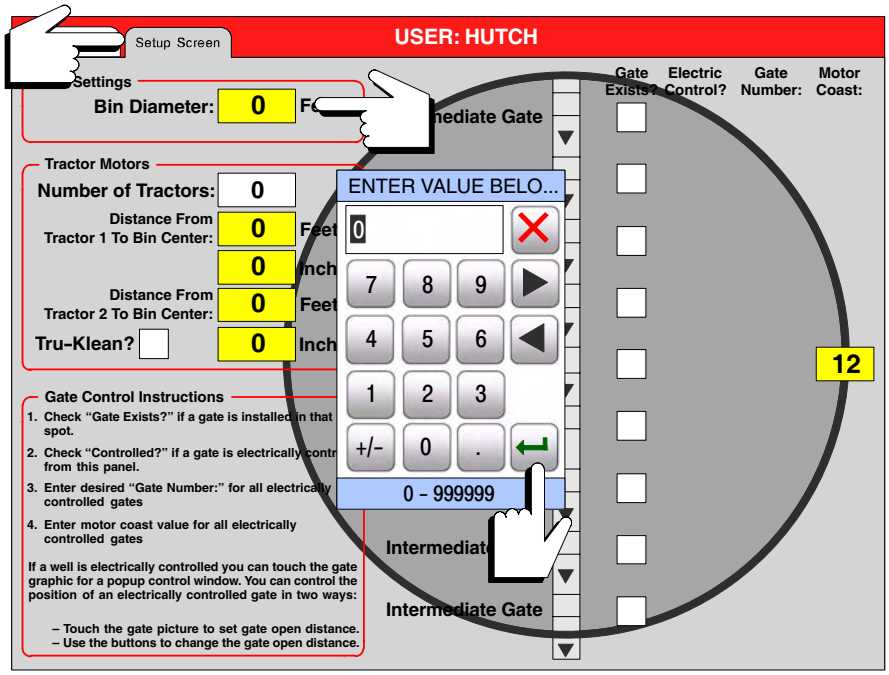


When using the pop-up keypad, and you accidently enter a wrong value, select the "X" on the keypad. The value you just entered will become highlighted, just re-enter the correct value (it will override the current value) and select the green arrow (enter) button.

This will hold true when using the pop-up keypad during other phases of the set-up procedures.

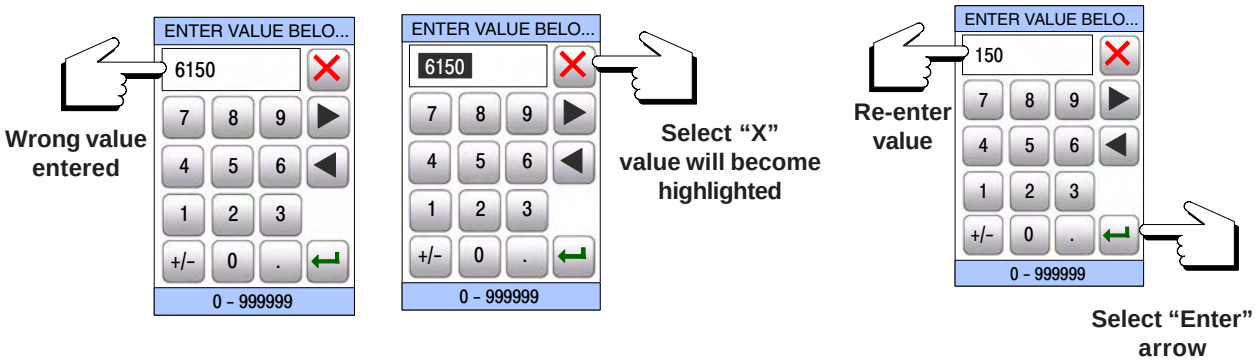

*Sweep Operation Set-Up (con't.)*

- **Enter the number of tractors**
  - Select yellow box in the "Tractor Motors" field.
  - Enter the number of tractors using the pop-up number pad.
  - Select green Enter arrow to save value.

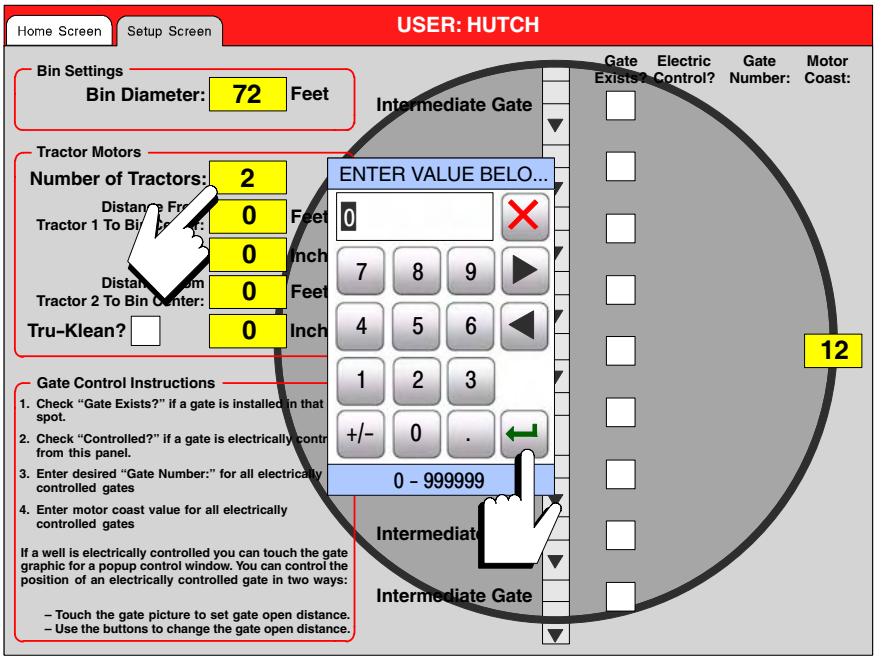


The following set-up procedures will consist of entering the distance from tractor(s) to center well. Tractor distance is the measurements you took, either after the tractor(s) were initially installed during assembly or were taken prior to setting up these operational parameters.

Use the chart below to record your measurements

| Tractor Distance Measurement | |
|---|---|
| Tractor #1 (ft. / in.) | Tractor #2 (ft. / in.) |
| | |

*Enter the Number of Tractors (con't.)*

- **Enter distance for tractor #1**
  - Select the top "feet" box in the "Tractors Mode" field.
  - Enter the distance from center well in feet (see the illustration below for determining the points from which to measure).
  - Select green Enter arrow.

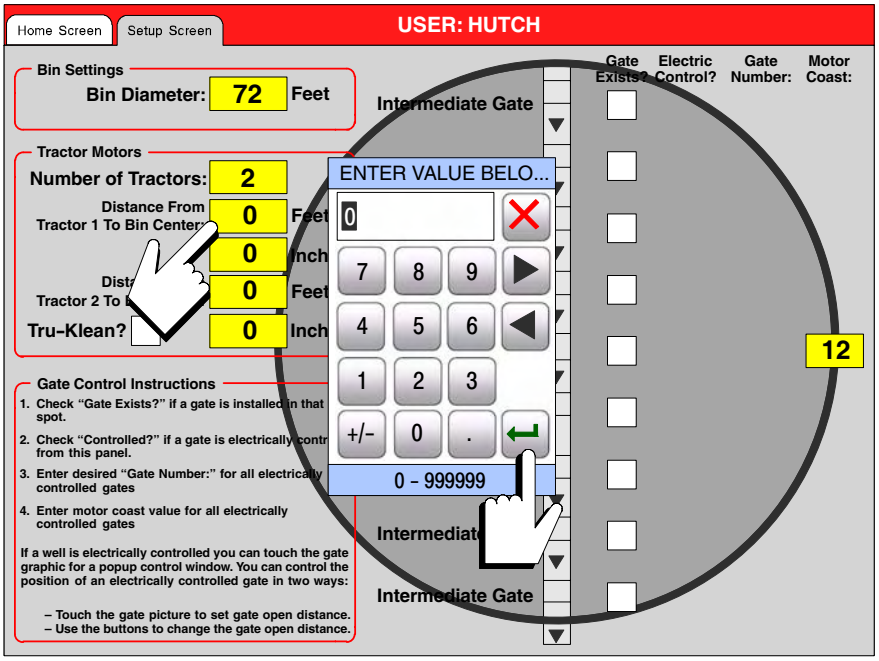


The illustration below shows the location of where measurements will be taken from. The points shown will be used whether there is one tractor or two tractors.

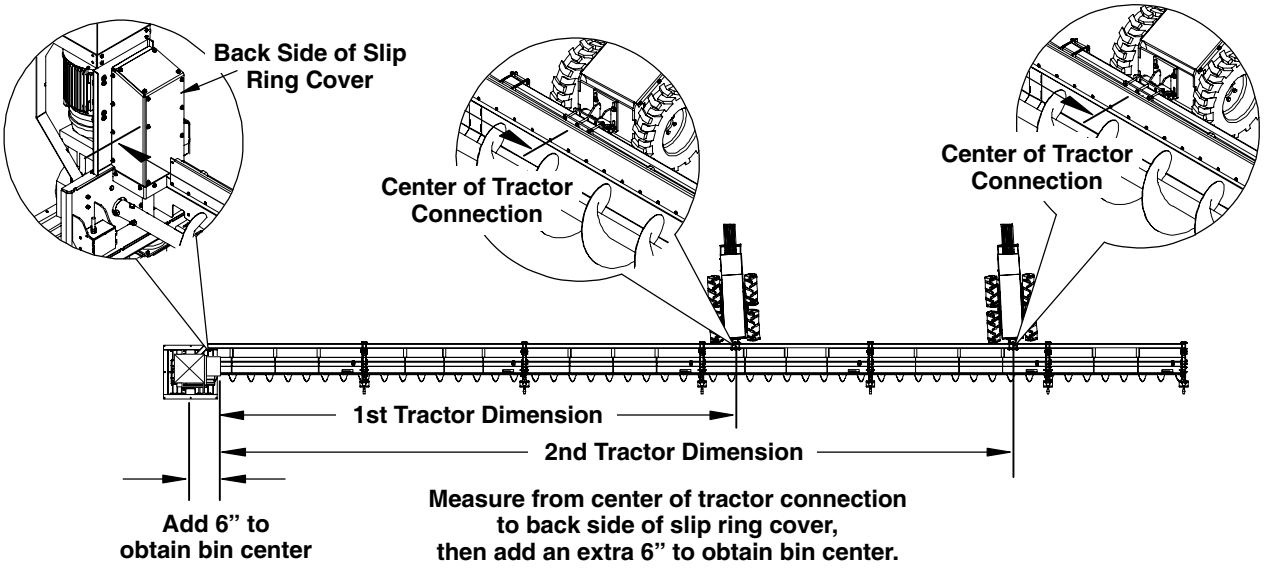

*Enter the Numbers of Tractors (con't.)*

- **Enter distance for tractor #1 (con't.)**

  - Select the top "inch" box in the "Tractors Mode" field.
  - Enter the inches from your previous measurement of the distance for tractor #1.
  - Select green Enter arrow.

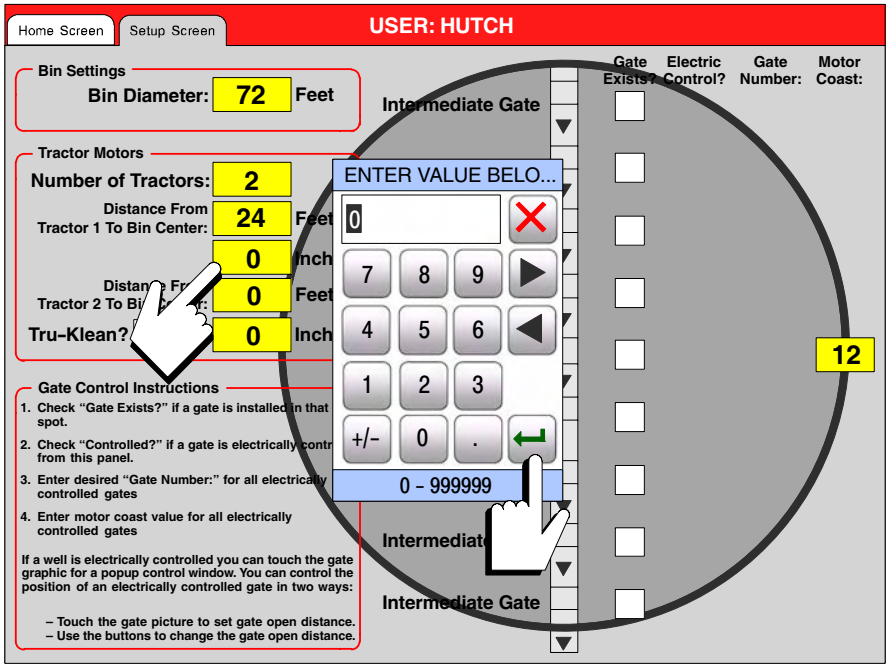

*Enter Distance for Tractors (con't.)*

- **Enter distance for tractor #2**
  - Select the bottom "feet" box in the "Tractors Mode" field.
  - Enter the distance from center well in feet (see the illustration below for determining the points from which to measure).
  - Select green Enter arrow.

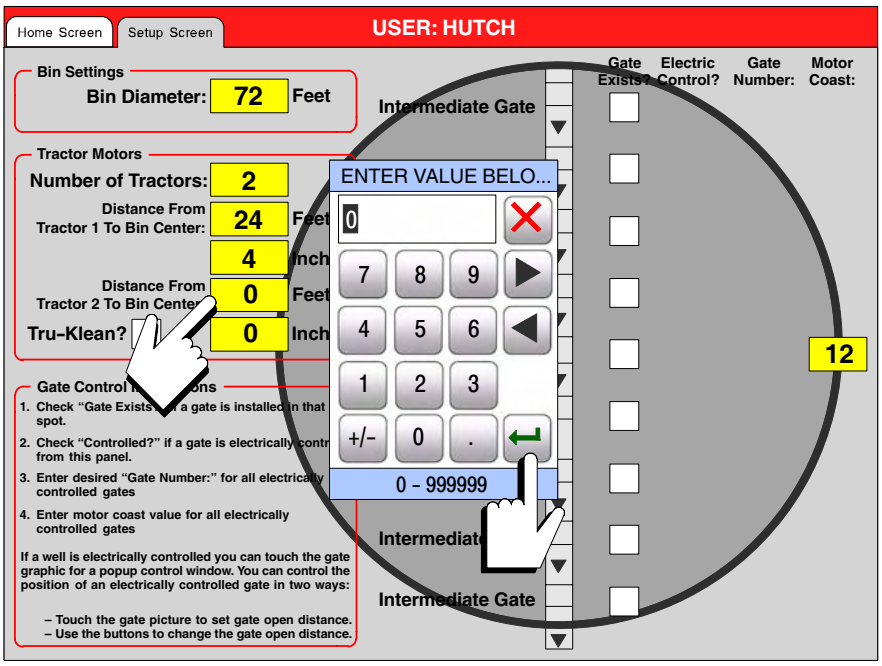


The illustration below shows the location of where measurements will be taken from. The points shown will be used whether there is one tractor or two tractors.

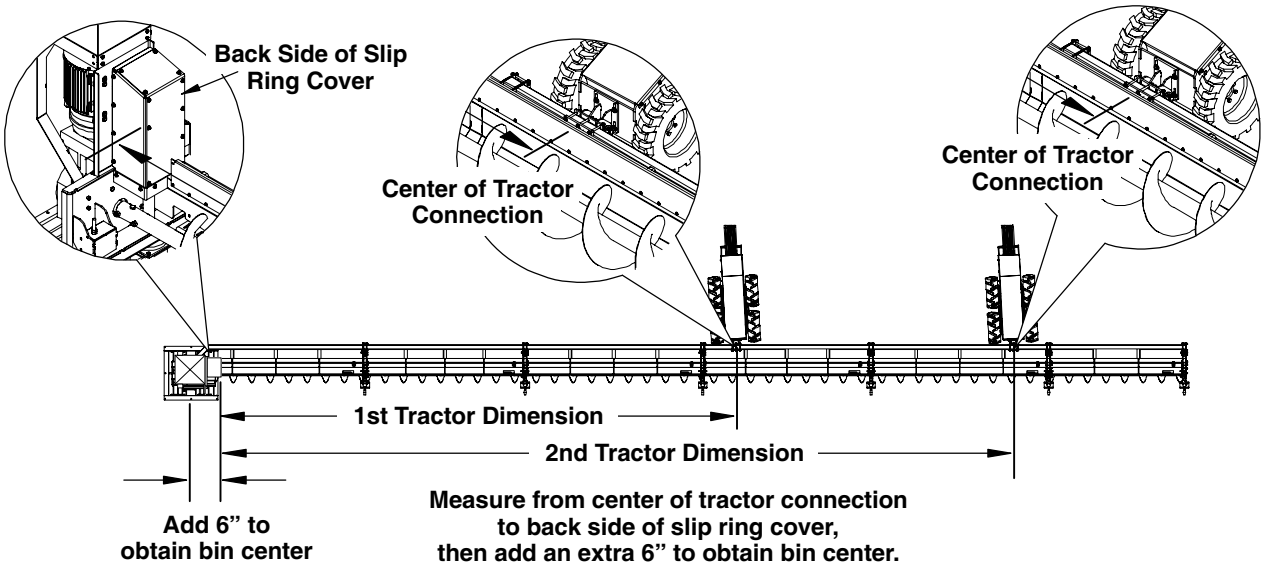

*Enter Distance for Tractors (con't.)*

- **Enter distance for tractor #2 (con't.)**
  - Select the bottom "inch" box in the "Tractors Mode" field.
  - Enter the inches from your previous measurement of the distance for tractor #2.
  - Select green Enter arrow.

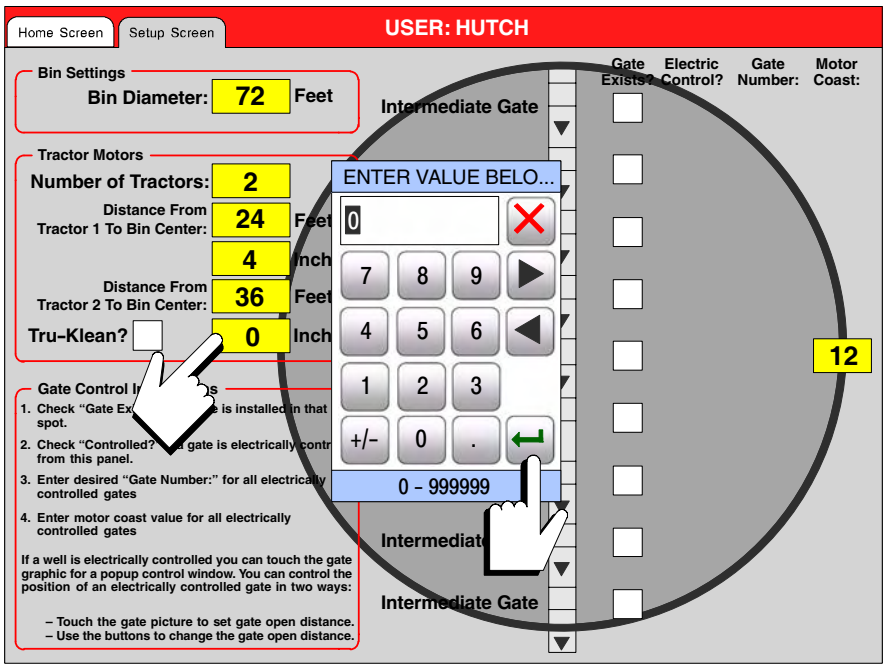


Note the white boxes shown under the heading "Gate Exists?" These are intended for electrically controlled gates which Hutchinson/Mayrath does not offer.

You can still touch the boxes to visually see how many and where your intermediate wells are located.

When selected, a check mark will appear in the box indicating position of well.

*Sweep Set-Up (con't.)*

## ♦ Tru-Klean Check Box

➢ The Tru-Klean box should only be checked if the drag conveyor option was installed with this unit. If the drag conveyor is not available, ***do not*** check the box.

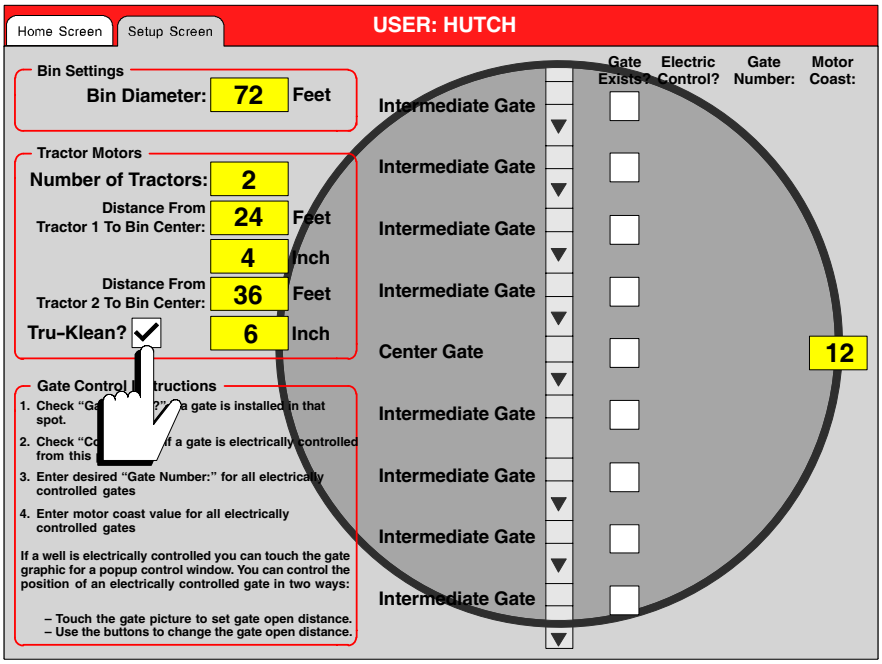


➢ Select "Home Screen" tab (a pop-up will appear to inform you to wait the approx. 15 seconds for the screens to switch).


**Note: If the Tru-Klean box was checked, the** TRU–KLEAN IS INSTALLED **and** START FINAL CLEAN **buttons will now appear on the Home Screen window every time it is accessed, but only if the Tru-Klean box was checked.**

*Sweep Set-Up (con't.)*

♦ **Enter Target Flow Rate**

- Select the yellow box next to the "Target Flow Rate" in the Sweep Settings field.
- Enter the desired flow rate using the pop-up number pad. Enter a flow rate value between **7,500** and **15,000 BPH** (at the bottom of the pop-up keypad, the value range is shown, if a value lower than or higher than what is shown is entered, the keypad will beep and the value entered will be highlighted in red. Simply re-enter a value within the 7500 & 15,000 range).
- Select green Enter arrow to save value.

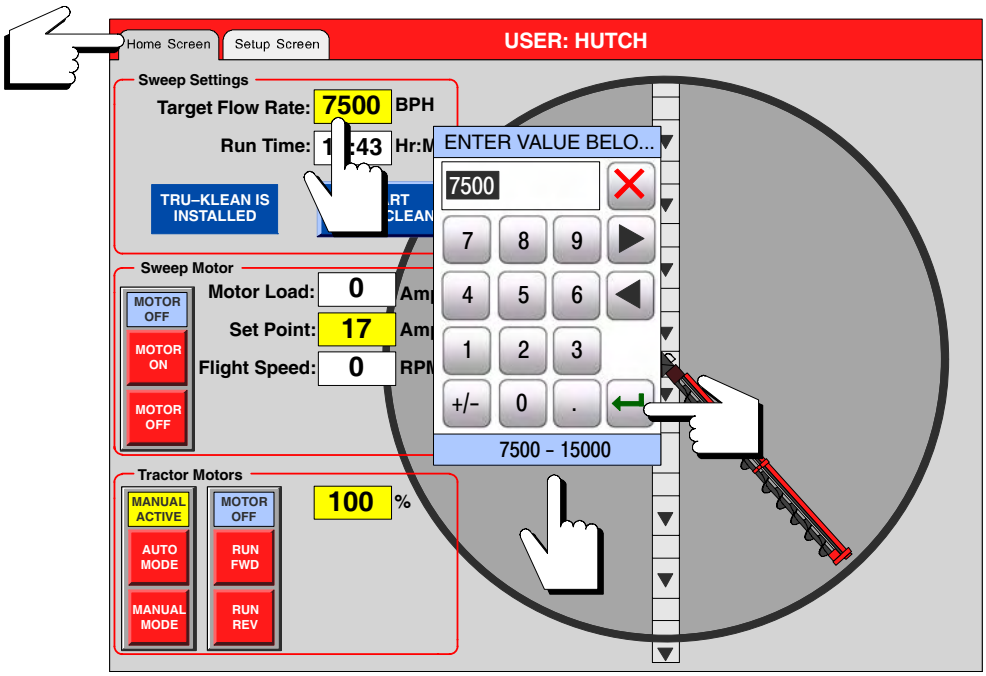


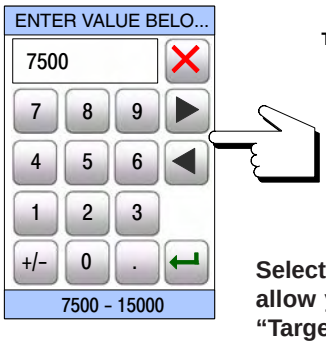


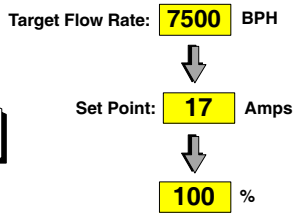


**Selecting the "Blue Arrows" on the pop-up keypad will allow you to toggle back-n-forth between the yellow "Target Flow Rate", "Set Point" & "%" boxes (the value in the box will become highlighted to let you know which box is selected).**

*Sweep Set-Up (con't.)*

- **Enter Set Point (Amps)**

  - Select the yellow box next to the "Set Point" in the Sweep Motor field.
  - Enter the set point in amperage using the pop-up number pad. Refer to the chart below for specific values determined by horse power and bin diameter. A recommended starting value (initial set point) is shown below in the chart, use the value given to match your particular horse power (this value can be changed later as the sweep is in operation, See Page 49).
    Also notice at the bottom of the pop-up keypad, a specific value range is shown. If a value lower than or higher than the range shown is entered, the keypad will beep and the value entered will be highlighted in red. Simply re-enter a value within the 17 - 45 range.
  - Select green Enter arrow to save the value.

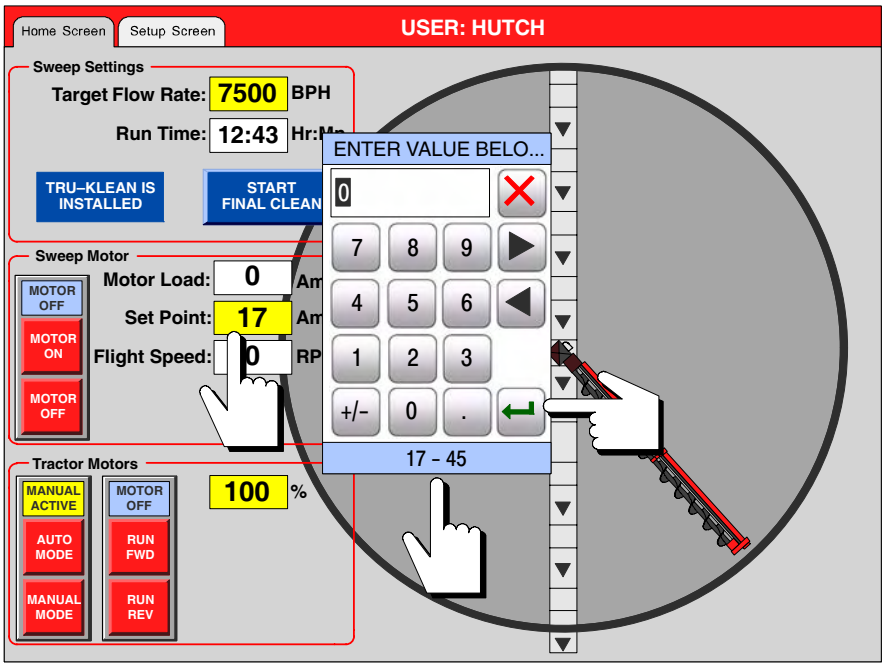


| Bin Dia. | H.P. | Range | Initial Set Point |
|---|---|---|---|
| 48' to 55' | 20 | 10 – 24 | 16 |
| 59' to 68' | 25 | 12 – 30 | 20 |
| 72' to 88' | 30 | 17 – 37 | 30 |
| 90' to 113' | 40 | 23 – 47 | 35 |
| 120' to 150' | 50 | 25 – 59 | 40 |

*Sweep Set-Up (con't.)*

♦ **Set "Home" Position for the Sweep**

➢ Select the **red** MANUAL MODE button, in the lower left corner of screen.

Be sure the MANUAL ACTIVE indicator light turns yellow to verify it is in the manual mode.

**Note: The yellow box in the Tractor Motors field that represents % can be adjusted to 100%. Select the % box and use pop-up keypad to enter percentage. This will allow the sweep to rotate at a faster pace. This setting can only be adjusted in Manual Mode.**

➢ The sweep can now be moved forward RUN FWD or reverse RUN REV by pushing and holding the buttons in the Tractor Motors field, the Motor On light will illuminate when pushing the buttons. These are **momentary contact buttons**, you must hold the button the entire time the sweep is being positioned. **Caution: The sweep can be moved in this mode when the sweep motor is running or when it is not.**

➢ Using the FWD and REV buttons, position the sweep above the intermediate wells inside the bin (the image on this screen may not reflect the actual position of the sweep in the bin).

➢ Select the yellow ENTER CALIBRATE button in the bottom right corner of the screen (the button will change to "Leave Calibrate" when properly activated).

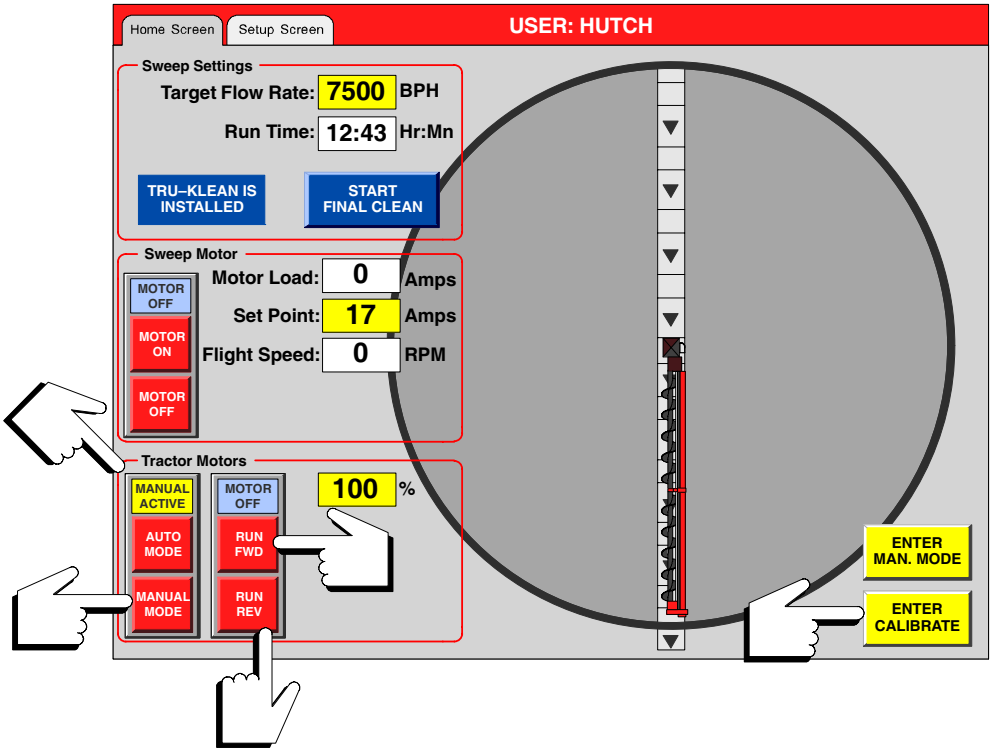

*Set "Home" Position for Sweep (con't.)*

- Select the "Set-Up Screen" tab.

- Select the **SET CURRENT POS. AS SWEEP ZERO** button in the middle of the Set-Up Screen. (this button will not give any indication that it has been selected).

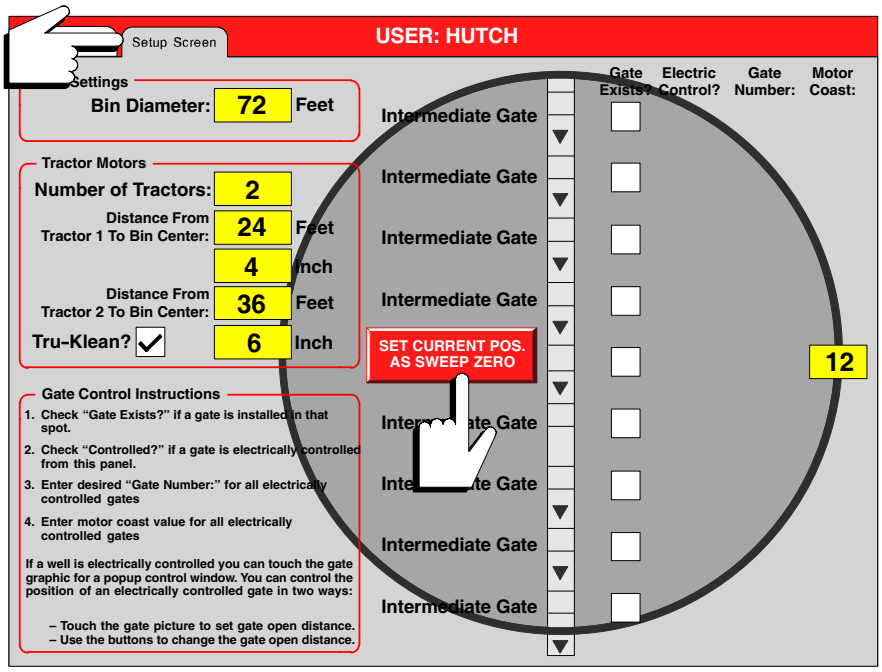

*Set "Home" Position for Sweep (con't.)*

- Select the "Home Screen" tab (a pop-up will appear to inform you to wait the approx. 15 seconds for the screens to switch).


- The sweep image on the screen should now appear above the wells.

- Select the yellow LEAVE CALIBRATE button at the bottom right of the screen. (the button will change to "Enter Calibrate" when properly activated).

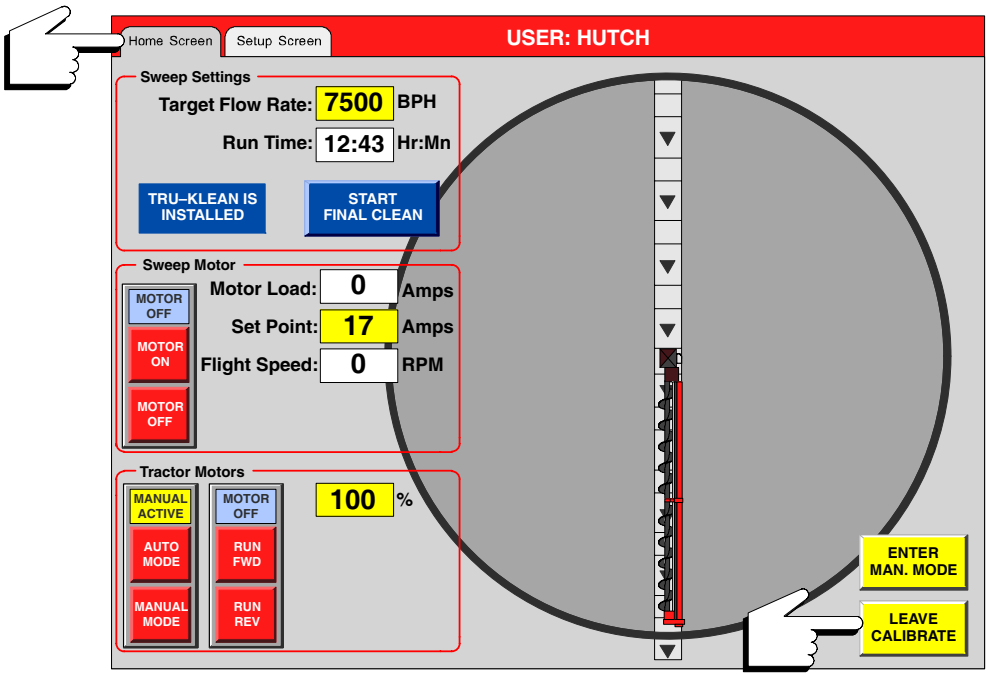


**Set-Up is now complete.**

Make sure to log out of the "hutch" mode before leaving. Select "User: hutch" at top middle of screen, "User: Operator" will appear. When the security manager window pops-up, select the "X" button.

## SWEEP OPERATION

♦ **Begin Sweep Operation**

➢ The screen will be in **USER: OPERATOR** mode. You can start all operations from this mode (with the exception of sending sweep to home position, See Page 51).

➢ Select the AUTO MODE button in the Tractor Motor field. Ensure the green AUTO ACTIVE light is illuminated.

➢ Select the MOTOR ON button in the Sweep Motor field (you may need to hold this button for 1 second for it to engage).

The "Motor Running" light in the Sweep Motor field and the "Motor On" light in the Tractors field will also turn green. The image of the sweep will now begin to rotate.

If necessary, the Flow Rate and Set Point (amps) can be readjusted at this time. **Note: These can be adjusted as the sweep is still in operation.** You can use the "Blue Arrow" buttons to toggle back-n-forth between the flow rate and set point boxes. When entering a value in either box and selecting the blue arrow, the value will be saved to the new value you entered.

Adjust these for actual grain flow (See Pages 44 & 45). For instance: if the pile of grain at the center of the bin increases rapidly, adjust the flow rate until this no longer occurs.

The amp set-point can be used to fine tune the grain flow by adjusting it up or down within the preset range shown in the chart on Page 45.

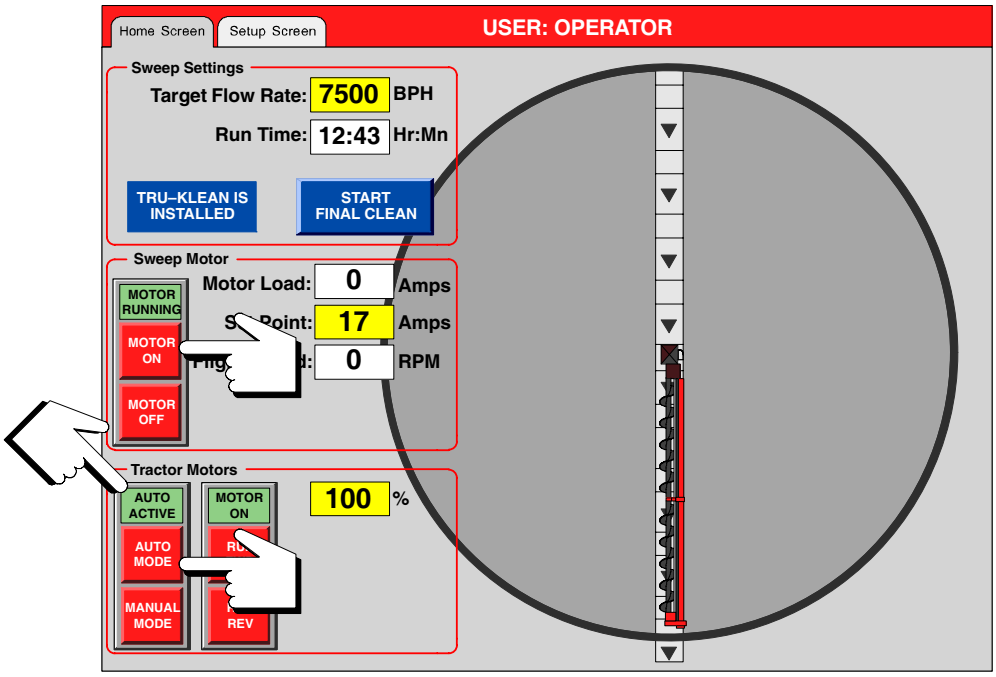

*Sweep Operation (con't.)*

**Note: The instructions below are for the Final Klean option, this function is only used if the Tru-Klean Drag Conveyor option has been installed. If the Tru-Klean box was previously checked, this function will be available (If it was not, continue with the instructions for "Send to Home Position" on the following page).**

**When in the "Auto" mode, the tractor(s) operate only when the sweep auger is turned on. Speed will vary according to the amp draw of the sweep motor.**

- After the sweep has completed the first pass, there will be about 1" *(25 mm)* to 2" *(51 mm)* of grain remaining on the bin floor.
- The sweep should still be active in the auto mode with the sweep motor still turned on.
- Select the START FINAL CLEAN button. The FINAL CLEAN IS ACTIVE pop-up will appear and continue flashing while Final Klean is activated

This will set the flight speed at 175 RPM and the tractor motor speed at 30%. These are predetermined values from the factory and cannot be changed.

**Only engage this feature after the sweep has completed one full revolution of the first pass.**

- When activated the Final Klean button will change to STOP FINAL CLEAN

To stop sweep operation, select the "Stop Final Klean" button and the "Motor Off" button in the Sweep Motor field.

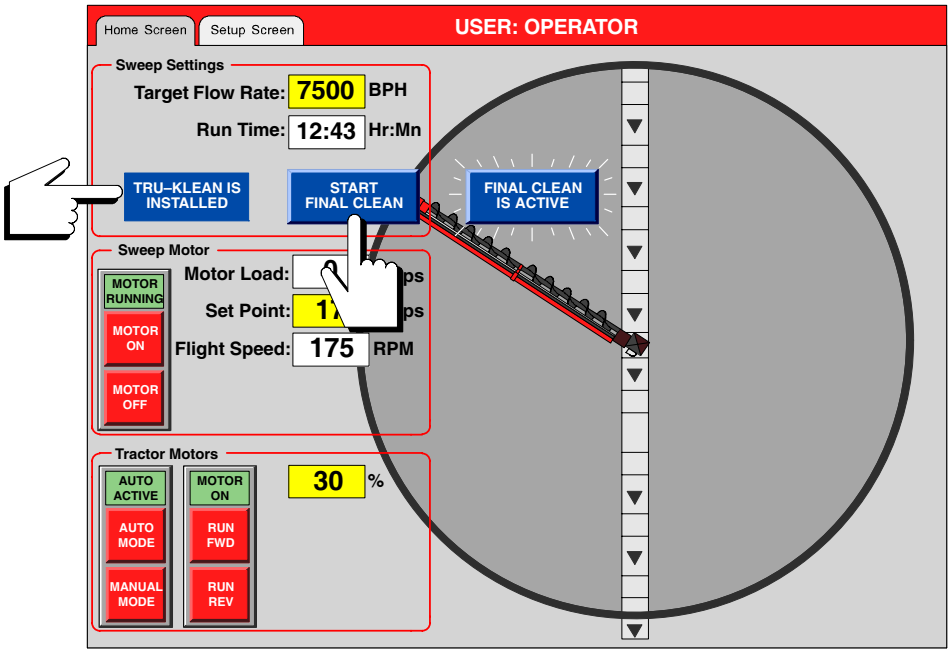

*Sweep Operation (con't.)*

- **Send to Home Position**
  - Log-In Maintenance Mode
    - Select **USER: OPERATOR** top middle screen
    - The "Security Manager" screen will appear, select the green Enter arrow.

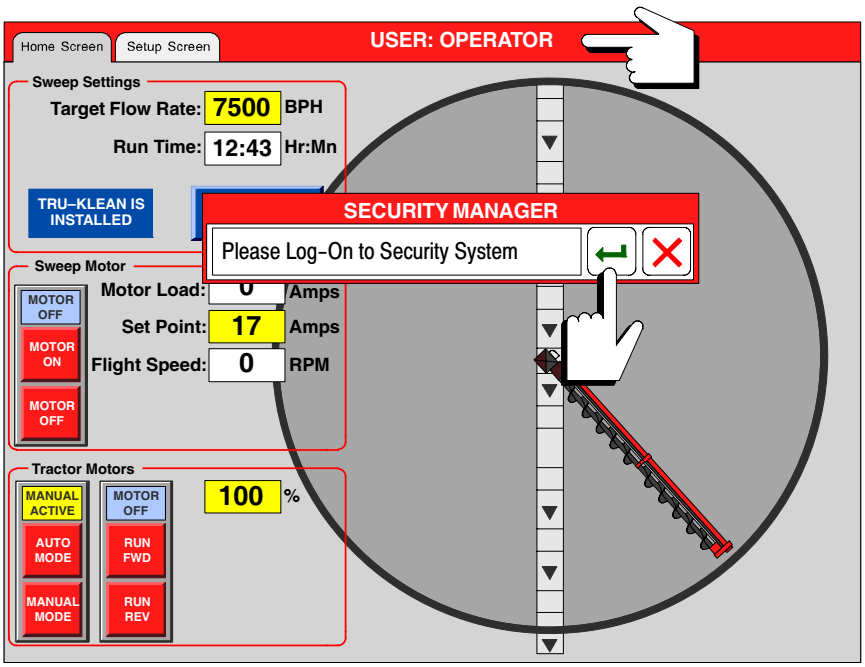


    - The "Enter Username" screen will appear, enter "maint" to enter maintenance mode, then select the green Enter arrow.

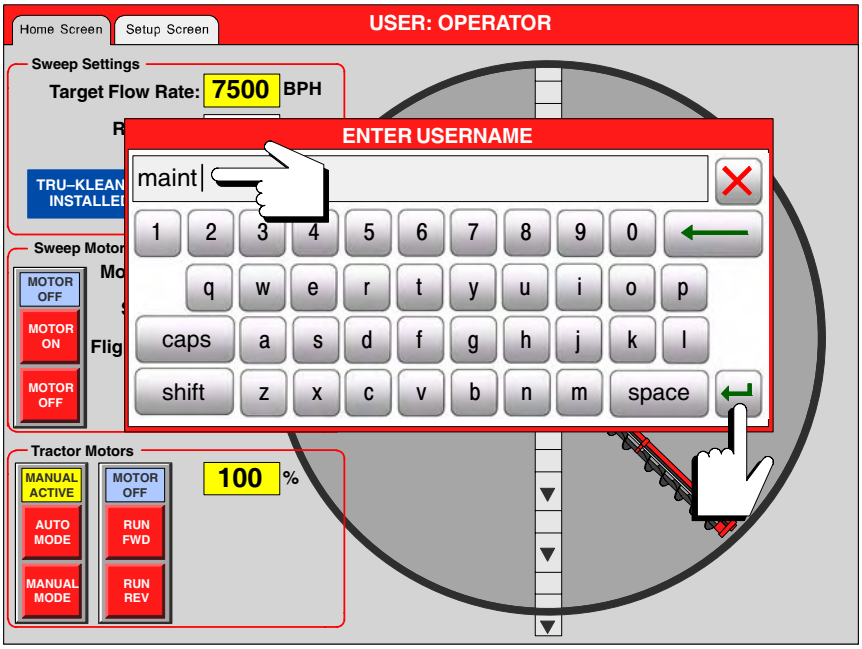

*Send to Home Position (con't.)*

➢ The "Enter Password" screen will appear. Enter "1111" and select green Enter arrow. (USER: OPERATOR will change to USER: MAINT)

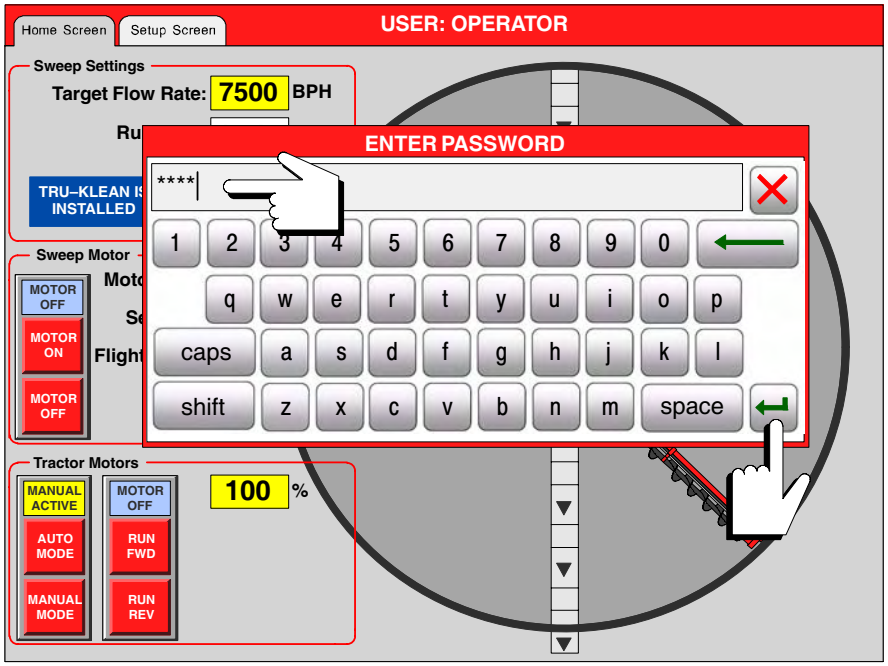


➢ After entering the password, an "Invalid User Credentials" window may appear. If this should occur, simply press the "X" in the pop-up and start log-in again.

*Send to Home Position (con't.)*

➢ Select the yellow **ENTER MAN. MODE** button in the bottom right corner of the screen. (the button will change to "Leave Man. Mode" when properly activated).

➢ Select the **MOTOR OFF** button in the Sweep Motor field.

**Note: The "Send Sweep to Home Pos." button will not work if the sweep motor is left on. Ensure sweep motor is "Off" when selecting the "Send Sweep to Home Pos." button.**

➢ Select the **SEND SWEEP TO HOME POS.** button that is visible in the Sweep Motor field. (the "Moving to Home Pos.!" light will appear and continue to flash while this function is in operation).

**The sweep will advance forward to its pre-designated home position.**

When the sweep reaches home position, the sweep will stop moving and the flashing "Moving to Home Pos.!" light will disappear. You can leave the screen as is or you can log-out (if the screen is left as is, it will automatically switch to USER: OPERATOR in approx 10 min.)

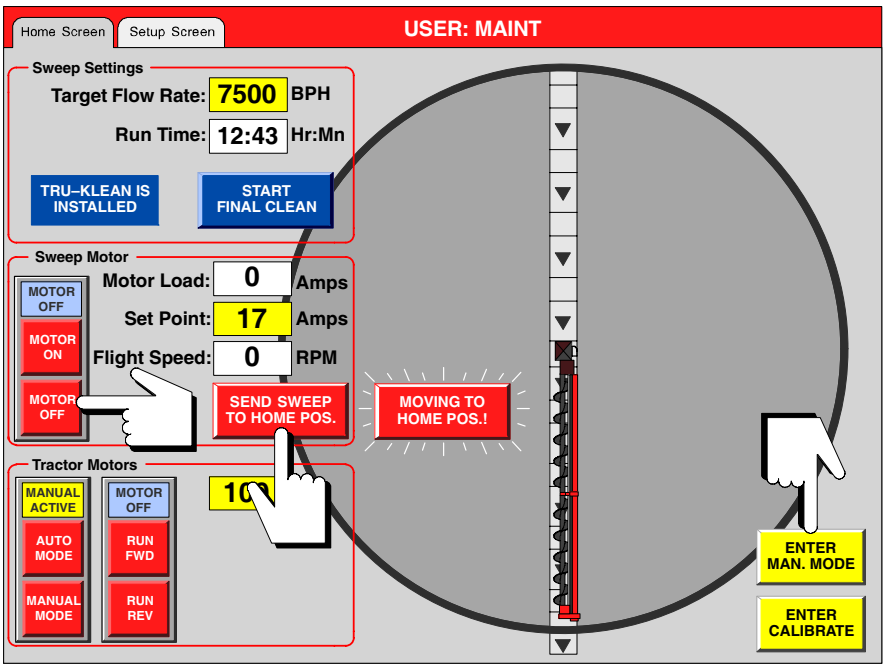

## PARTS LIST TABLE OF CONTENT



The following parts pages cover the components for the Model 3150 NexGen Sweep Augers and the Optional Tru-Klean Drag Conveyors listed below.

**NexGen 3000 Klean Sweep Auger Model 3150**

| Catalog No. | Bin Dia. | Catalog No. | Bin Dia. |
|---|---|---|---|
| BK318048SD6 | 48’ | BK318080SD6 | 80’ |
| BK318049SD6 | 49’ | BK318088SD6 | 88’ |
| BK318054SD6 | 54’ | BK318090SD6 | 90’ |
| BK318055SD6 | 55’ | BK318092SD6 | 92’ |
| BK318059SD6 | 59’ | BK318105SD6 | 105’ |
| BK318060SD6 | 60’ | BK318113SD6 | 113’ |
| BK318062SD6 | 62’ | BK318120SD6 | 120’ |
| BK318068SD6 | 68’ | BK318132SD6 | 132’ |
| BK318072SD6 | 72’ | BK318136SD6 | 136’ |
| BK318075SD6 | 75’ | BK318150SD6 | 150’ |
| BK318078SD6 | 78’ | | |

**Optional Tru-Klean Drag Conveyor**

| Catalog No. | Bin Dia. | Catalog No. | Bin Dia. |
|---|---|---|---|
| BK3048D | 48’ | BK3080D | 80’ |
| BK3049D | 49’ | BK3088D | 88’ |
| BK3054D | 54’ | BK3090D | 90’ |
| BK3055D | 55’ | BK3092D | 92’ |
| BK3059D | 59’ | BK30105D | 105’ |
| BK3060D | 60’ | BK30113D | 113’ |
| BK3062D | 62’ | BK30120D | 120’ |
| BK3068D | 68’ | BK30132D | 132’ |
| BK3072D | 72’ | BK30136D | 136’ |
| BK3075D | 75’ | BK30150D | 150’ |
| BK3078D | 78’ | | |

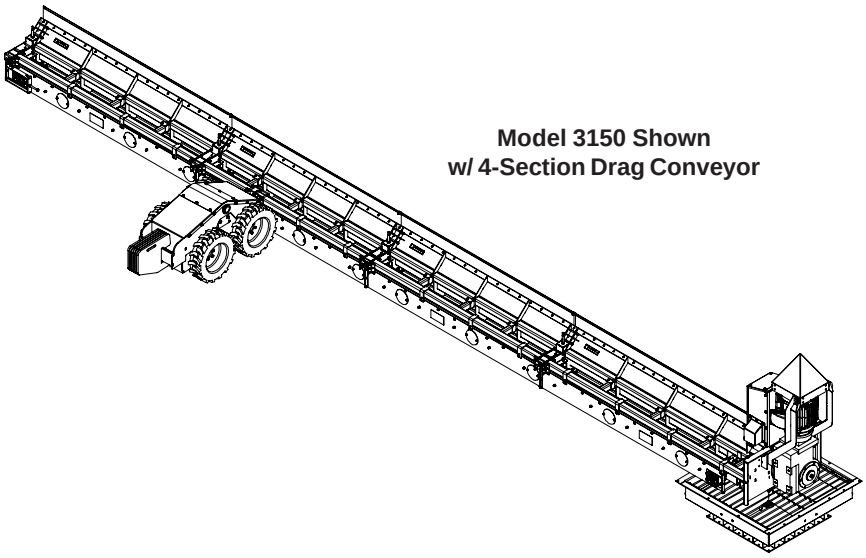

**Model 3150 Shown w/ 4-Section Drag Conveyor**

## SAFETY DECALS & SIGNS

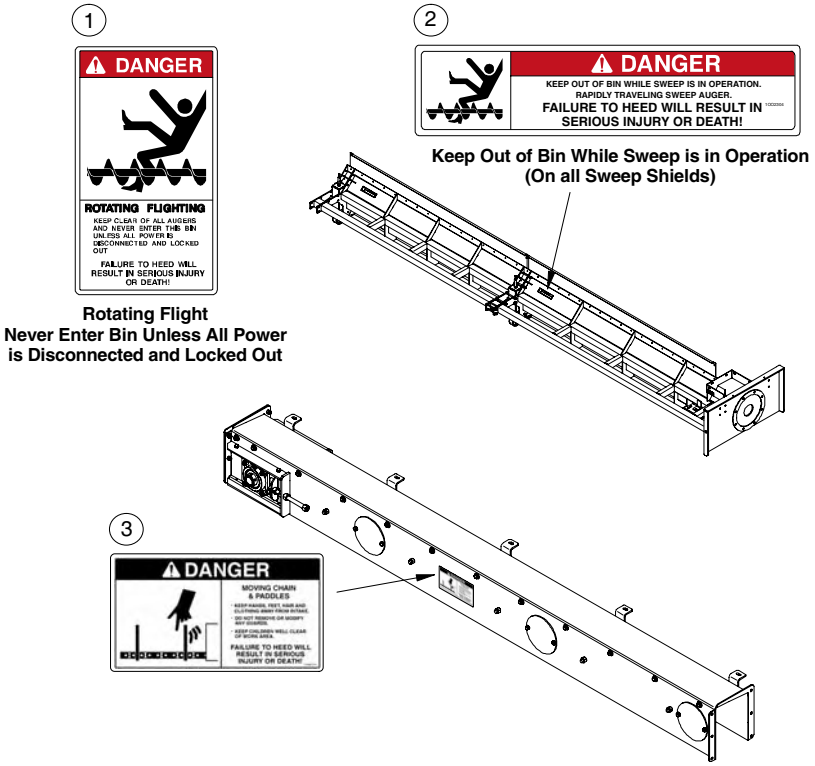


| Ref. No. | Part No. | Description |
|---|---|---|
| 1 | 1002303 | Decal, Danger: Never Enter Bin... |
| 2 | 1002304 | Decal, Danger: Keep Out of Bin... |
| 3 | 1002311 | Decal, Danger: Moving Chain... |

Check to ensure all Safety Decals are present and in good condition. If a decal cannot easily be read for any reason, or has been painted over, replace the decal immediately.

Safety decals are offered free of charge and can be ordered through your Hutchinson/Mayrath dealer or directly from the factory.

## BEARING SUPPORTS, FLIGHTS & SHIELDS

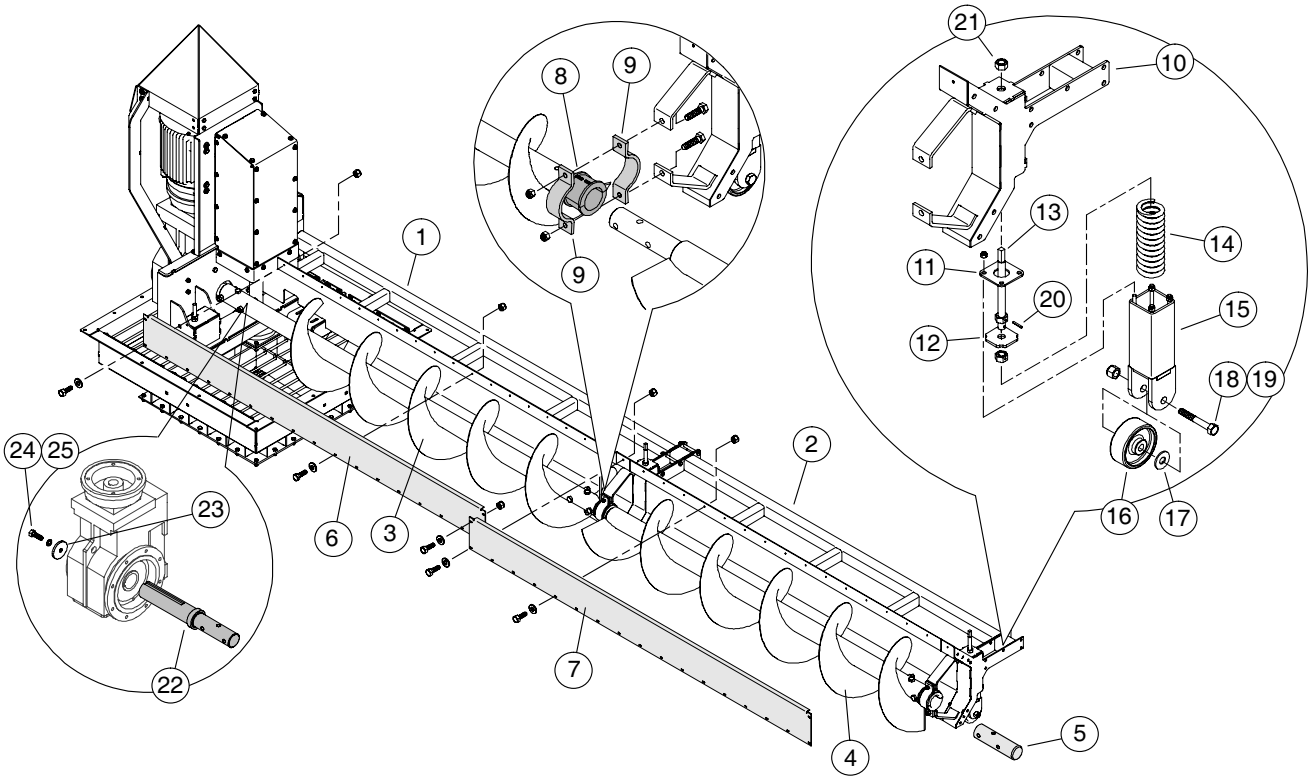


| Ref. No. | Part No. | Description |
|---|---|---|
| 1 | 1043345 | Shield, Entrance (all bin diameters) |
| 2 | 1043410 | Sweep Shield, 94” long |
| (2) | 1043399 | Sweep Shield, 97” long |
| (2) | 1043417 | Sweep Shield, 104” long |
| 3 | 1043385 | Flight, Entrance (all bin diameters) |
| 4 | 1043414 | Sweep Flight, 94” |
| (4) | 1043403 | Sweep Flight, 97” |
| (4) | 1043421 | Sweep Flight, 104” |
| 5 | 1043423 | Stub, Flight Connecting |
| 6 | 1043398 | Back Shield, f/ Entrance Shield (all bin diameters) |
| 7 | 1043416 | Back Shield, 94” |
| (7) | 1043409 | Back Shield, 97” |
| (7) | 1043422 | Back Shield, 104” |
| 8 | 3228A11 | Bearing, Nylon |
| 9 | 1043469 | Retainer f/ Nylon Bearing |
| 10 | 1043317 | Support Stand, Bearing |
| 11 | 1043338 | Top Plate f/ Wheel Bracket |

The 104” Flights and Shields can be used as middle sections, but will always be on the end.

| Ref. No. | Part No. | Description |
|---|---|---|
| 12 | 1043339 | Plate, Spring Adjustment |
| 13 | 1043615 | Rod, Wheel Adjustment |
| 14 | 1043335 | Spring, Adjustment Plate |
| 15 | 1043318 | Bracket, Wheel |
| 16 | 1040476 | Wheel, 5” x 2” Cast Iron |
| 17 | 33027 | Washer, 3/4” Flat |
| 18 | 33277 | Bolt, 3/4”-10 x 4 1/2” |
| 19 | 33140 | Nut, 3/4”-10 Nylon Lock |
| 20 | 33158 | Pin, Roll, 3/16” x 1 1/4” |
| 21 | D1152 | Nut, 3/4”-10 Non-Lock |
| 22 | 1043424 | Shaft, Gearbox Output f/ BF148 |
| - - | 1044852 | Key, 7/8” x 7 1/2” long f/ Gearbox Output Shaft |
| (22) | 1043425 | Shaft, Gearbox Output f/ BF128 |
| - - | | Key, 3/4” |
| 23 | 1044853 | Keeper Plate f/ Gearbox Shaft |
| 24 | 1010605 | Bolt, 1”-8 x 2 1/2” |
| 25 | D1159 | Washer, 1” Lock |

**The Bearing Support Stand can be obtained as a complete assembly. It includes items 10 thru 21. Order Part No. 1043316**

## DRIVE ASSEMBLY COMPONENTS

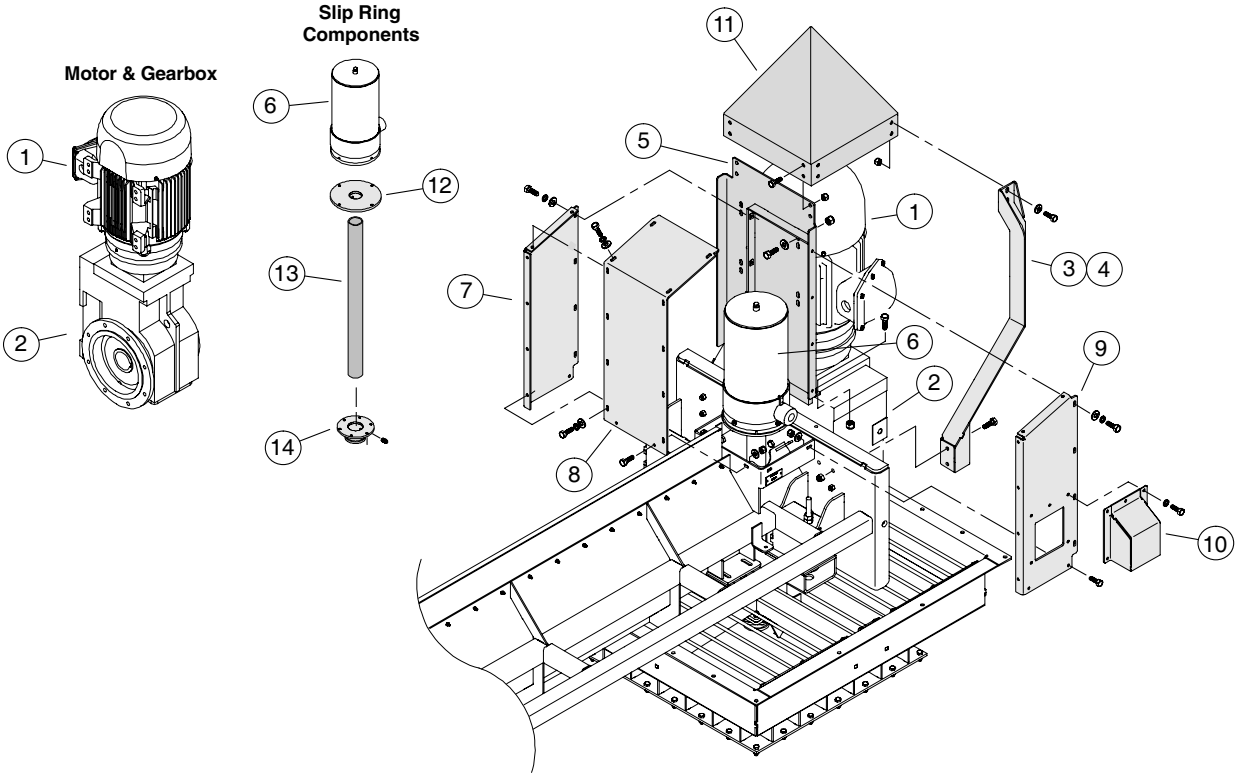


| Ref. No. | Part No. | Description |
|---|---|---|
| 1 | 1044800 | Electric Motor, 20HP 3PH 230/460V, 256TC Face XP |
| (1) | 1044801 | Electric Motor, 25HP 3PH 230/460V, 284TC Face XP |
| (1) | 1044802 | Electric Motor, 30HP 3PH 230/460V, 286TC Face XP |
| (1) | 1044803 | Electric Motor, 40HP 3PH 230/460V, 324TC Face, XP |
| (1) | 1044804 | Electric Motor, 50HP 3PH 230/460V, 326TC Face, XP |
| 2 | 1044818 | Gearbox, BF148, 10:1 ratio |
| (2) | 1043468 | Gearbox, BF128, 10:1 ratio |
| 3 | 1044436 | Support, Motor Mount Cover, front, f/ 30HP |
| (3) | 1044843 | Support, Motor Mount Cover, front, f/ 40HP |
| 4 | 1044441 | Support, Motor Mount Cover, back, f/ 30HP |
| (4) | 1044846 | Support, Motor Mount Cover, back, f/ 40HP |

| Ref. No. | Part No. | Description |
|---|---|---|
| 5 | 1043443 | Plate, Motor Mount f/ 30HP |
| (5) | 1044832 | Plate, Motor Mount f/ 40HP |
| 6 | 1043796 | Slip Ring, XP 9 Ring w/ 250V heater & AMCI Encoder |
| (6) | 1044805 | Slip Ring, XP 12 Ring w/ 250V heater & AMCI Encoder |
| 7 | 1043730 | Cover, Side (LH) f/ Slip Ring f/ 30HP |
| (7) | 1044838 | Cover, Side (LH) f/ Slip Ring f/ 40HP |
| 8 | 1043457 | Cover, Front & Top f/ Slip Ring f/ 30HP |
| (8) | 1044842 | Cover, Front & Top f/ Slip Ring f/ 40HP |
| 9 | 1043729 | Cover, Side (RH) f/ Slip Ring f/ 30HP |
| (9) | 1044840 | Cover, Side (RH) f/ Slip Ring f/ 40HP |
| 10 | 1044506 | Cover, Conduit f/ Slip Ring |
| 11 | 1043441 | Guard, Motor f/ 30HP |
| (11) | 1044830 | Guard, Motor f/ 40HP |
| 12 | 1043459 | Mount, Top f/ Slip Ring |
| 13 | 1043464 | Tube, Bottom Mount f/ Slip Ring |
| 14 | 1044849 | Flange, Bottom Mount f/ Slip Ring |

## *CENTER WELL COMPONENTS*

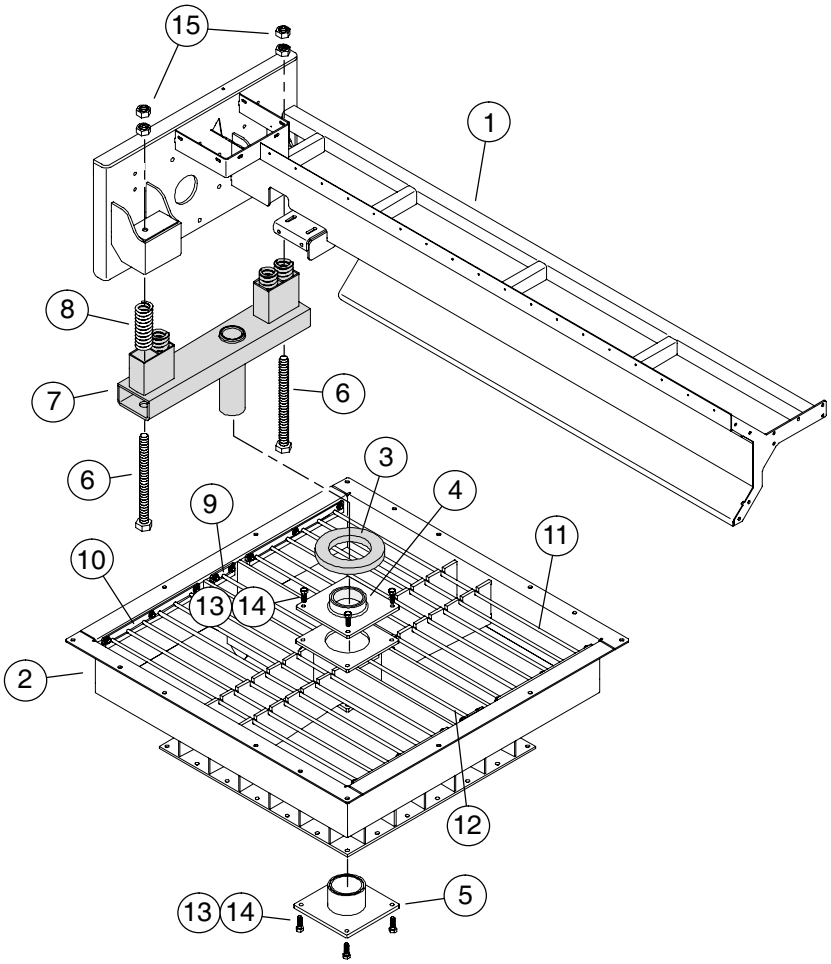


| Ref. No. | Part No. | Description |
|---|---|---|
| 1 | 1043345 | Shield, Entrance (all bin diameters) |
| 2 | 1043281 | Center Well Weldment |
| 3 | 1043308 | Block, UHMW Thrust |
| 4 | 1039096 | Retainer, Top Bearing |
| 5 | 1043282 | Retainer, Bottom Bearing |
| 6 | 1043771 | Rod, Tensioner |
| 7 | 1043309 | Bracket, Center Pivot |
| 8 | 1043335 | Spring, Adjustment |
| 9 | 1043286 | Strap, Rod Retainer (short) |
| 10 | 1043285 | Strap, Rod Retainer (long) |
| 11 | 1043283 | Divider Rod, 1/2” x 47 7/8” |
| 12 | 1043284 | Divider Rod, 1/2” x 23 3/8” |
| 13 | 33247 | Bolt, 1/2”-13 x 1 3/4” |
| 14 | 33138 | Nut, 1/2”-13 Nylon Lock |
| 15 | D1152 | Nut, 3/4”-10 Non-Lock |

## DRAG SECTION COMPONENTS

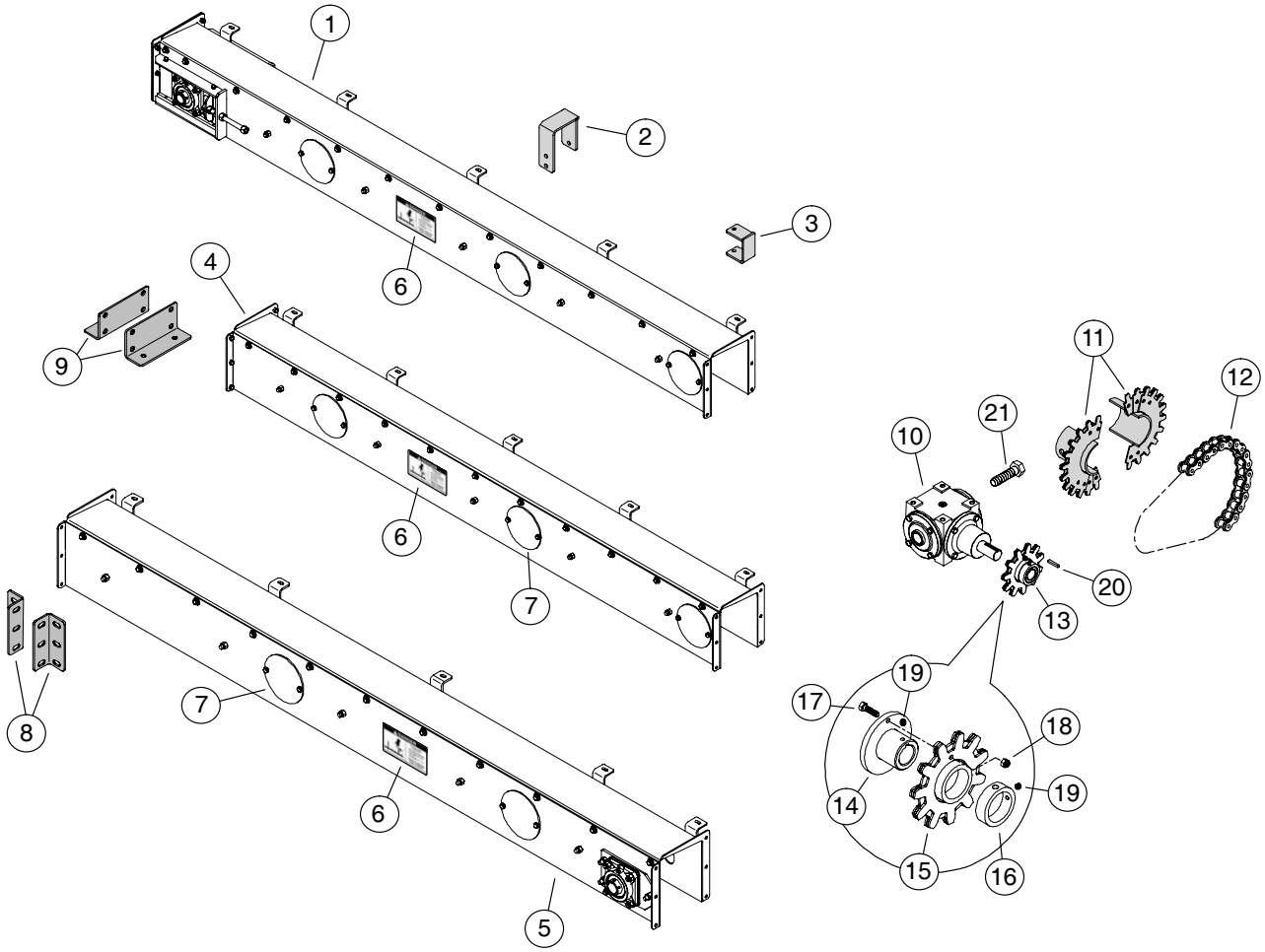


| Ref. No. | Part No. | Description |
|---|---|---|
| 1 | 1044912 | Drag Tail Section |
| 2 | 1044177 | Back Drag Connecting Bracket |
| 3 | 1044175 | Front Drag Connecting Bracket |
| 4 | 1044913 | Drag Section, 98” long |
| (4) | 1044914 | Drag Section, 101” long |
| 5 | 1044911 | Drag Entrance End |
| 6 | 1002311 | Decal, Danger: Moving Chain... |
| 7 | 1043768 | Cover, f/ Return Roller |
| 8 | 1044032 | Connection Bracket (back drag to bearing stand) |
| 9 | 1044031 | Connection Bracket (front drag to bearing stand) |
| 10 | 1044026 | Gearbox, 1.53:1 Ratio |
| 11 | 1044048 | Split Sprocket, CA550 20 tooth |
| 12 | 1044050 | Chain, CA550 31 links 1.63 pitch |
| 13 | 1044033 | Sprocket Assembly |
| 14 | 1044036 | •Hub, Shear Pin |
| 15 | 1044034 | •Sprocket, CA550 11 tooth |
| 16 | 1044041 | •Collar, 2” Setscrew Shaft |
| 17 | 33197 | •Bolt, 1/4”-20 x 1 1/4” |
| 18 | 4003 | •Nut, 1/4”-20 Nylon Lock |
| 19 | 33245 | •Setscrew, 5/16” x 5/16” |
| 20 | 8371C | Key, 1/4” sq. x 1 1/2” long |

• Indented Parts Names Indicate these Parts are Included in the Previous Assembly.

## *DRAG SECTION BEARINGS, CHAIN & PADDLES*

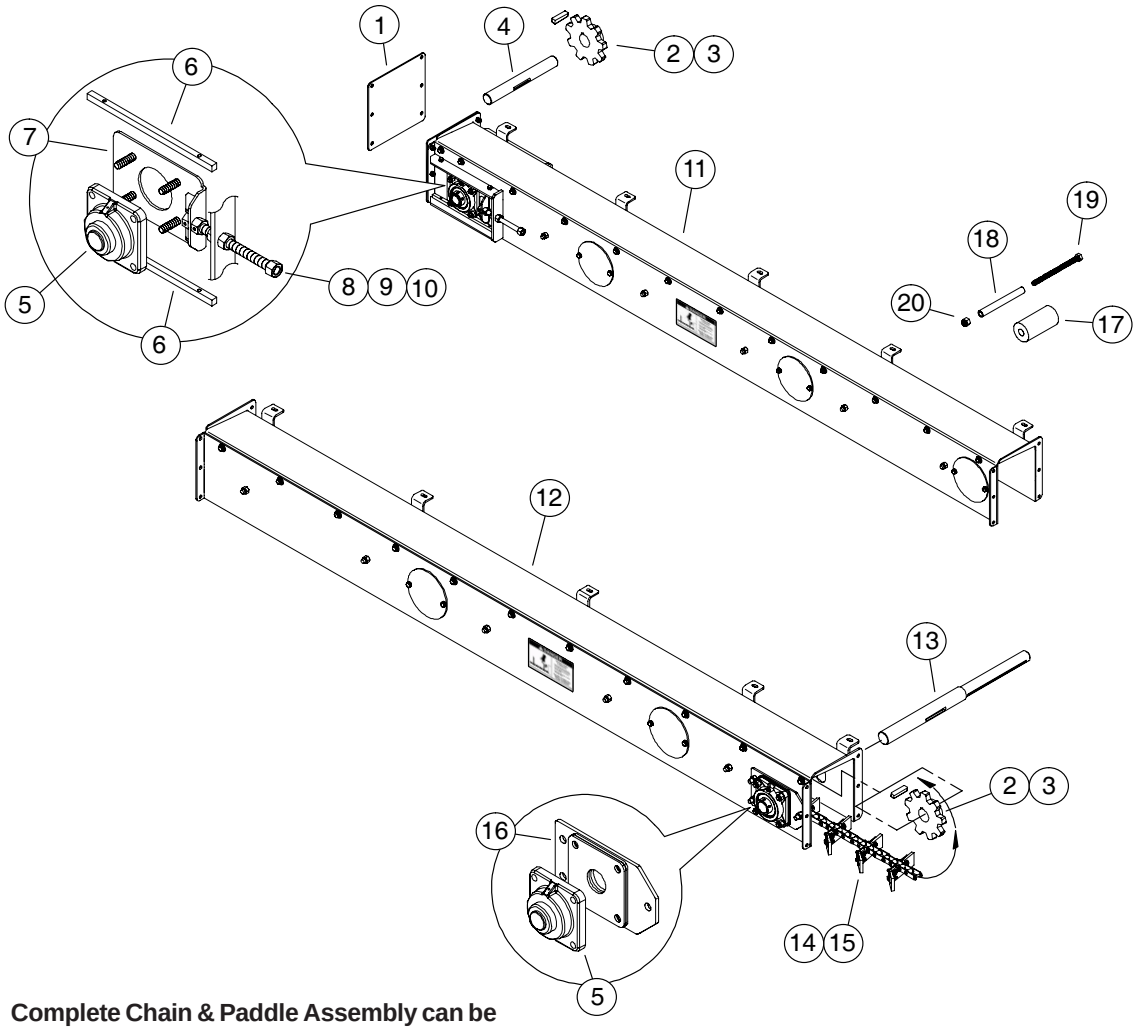


**Complete Chain & Paddle Assembly can be obtained by ordering Part No. 1044115 (130 7/16” long, consists of Items 14 & 15).**

| Ref. No. | Part No. | Description |
|---|---|---|
| 1 | 1044111 | End Cover f/ Drag Tail Section |
| 2 | 1034759 | Sprocket, CA550 9 tooth |
| 3 | 4049A1 | Key, 3/8” sq. x 1 1/2” long |
| 4 | 1044113 | Tail Shaft f/ Drag Tail Section |
| 5 | 1029745D | Bearing, 1 1/2” bore 4-bolt flange |
| 6 | 1044109 | Guide Bar |
| 7 | 1044103 | Take-Up Plate |
| 8 | 1035992 | Take-Up Bolt |
| 9 | D1170 | Nut, 5/8”-11 Nylon Lock |
| 10 | 31121 | Roll Pin, 3/6” x 1” |
| 11 | 1044912 | Drag Tail Section |
| 12 | 1044911 | Drag Entrance End |
| 13 | 1043763 | Head Shaft f/ Drag Entrance End |
| 14 | 1044114 | Chain w/ Brackets, 130 7/16” long |
| * | 40352 | Connecting Link f/ CA550 Chain |
| * | 41492 | Offset Link f/ CA550 Chain |
| 15 | 1044112 | Paddle, Rubber f/ Drag Chain |
| 16 | 1044917 | Bearing Mount Plate |
| 17 | 1044900 | Return Roller f/ Drag Sections |
| 18 | 1044901 | Idler Pipe f/ Return Rollers |
| 19 | 1044402 | Threaded Rod, 1/2” x 9” long |
| 20 | 33138 | Nut, 1/2”-13 Nylon Lock |

*Not Shown

**Hutchinson/Mayrath**

*A Division of **GLOBAL** Industries Inc.*

Hutchinson/Mayrath • P.O. Box 629 • Clay Center, KS. 67432
Ph. 785–632–2161 • Fx. 785–632–5964 • Toll Free 800–523–6993
www.hutchinson-mayrath.com