12” SWING AWAY AUGER SIDE DRIVE KIT

OWNER’S & OPERATOR’S MANUAL

Effective March 17, 2006 **Publication No. 1029257**

Hutchinson/Mayrath
A Division of GLOBAL Industries, Inc.

P.O. Box 629 • 514 W. Crawford • Clay Center, KS 67432
Phone 785-632-2161 • 1-800-523-6993 • FAX 785-632-5964

Hutchinson/Mayrath

A Division of **GLOBAL** Industries, Inc.

POLICIES AND PROCEDURES

PRICES: Prices in effect at time of shipment will apply. Prices are subject to change without notice. All prices are F.O.B. Clay Center, Kansas. Orders shipped from locations other than Clay Center, Kansas will be subject to additional charges, such as back freight and/or additional freight.

SERVICE CHARGE: A service charge will be assessed on all past due balances as permitted by state law not to exceed 1-1/2% per month.

MIINMUM ORDER: Processing and handling costs necessitate a minimum charge of $15.00 net on all orders.

BACK ORDERS: Back orders will be shipped as they become available. Contact Hutchinson/Mayrath Customer Service for alternative shipping options or if cancellation is desired.

DAMAGED GOODS: It is the consignee's responsibility to check all shipments thoroughly upon receipt of goods. If any damage is discovered, it must be noted on the freight bill of lading before signing. The consignee must make necessary claims against the respective freight line. All damage claims must be submitted within 30 days of delivery receipt.

SHORTAGES: All shortages must be noted at time of delivery receipt. Shortages must be noted on the freight bill of lading before signing. Hutchinson/Mayrath must be advised of all concealed shortages upon discovery. Once notified of concealed shortages Hutchinson/Mayrath will advise corrective action to be taken.

RETURN OF GOODS: All returns must be approved by Hutchinson/Mayrath prior to shipment. All return requests will be issued a return authorization number. NO RETURNS WILL BE ACCEPTED WITHOUT A RETURN AUTHORIZATION NUMBER AND PRIOR AUTHORIZATION FROM THE FACTORY. All returns must be shipped prepaid. A 15% restocking charge will be applied to all returned merchandise. Custom products may not be returned for credit. Only current products in new and saleable condition may be returned. No safety devices may be returned for credit.

MODIFICATIONS: It is the policy of Hutchinson/Mayrath to improve its product whenever possible and practical to do so. We reserve the right to make changes, improvements and modifications at any time without incurring the obligation to make such changes, improvements and modifications on any equipment sold previously.

LIMITED WARRANTY: (a) For a period of (1) year after receipt of goods by the original consumer buyer, Hutchinson/Mayrath will supply free of charge replacement parts for parts that prove defective in workmanship or material. Defective parts must be returned freights prepaid to a specified Hutchinson/Mayrath location. Only Hutchinson/Mayrath original repair parts may be used for warranty repairs.
(b) This limited warranty does not extend to parts designed to wear in normal operation and be replaced periodically, or to damage caused by negligence, accident, abuse or improper installation or operation.
(c) GOODS NOT MANUFACTURED BY HUTCHINSON/MAYRATH CARRY ONLY THE MANUFACTURER'S WARRANTY.
(d) THIS UNDERTAKING IS IN LIEU OF ALL OTHER WARRANTIES, EXPRESSED OR IMPLIED, INCLUDING MERCHANTABILITY AND FITNESS FOR A PARTICULAR PURPOSE.

FAILURE TO FOLLOW THE INSTRUCTIONS CONTAINED IN THE OWNER'S & OPERATOR'S MANUALS AND THE ITEMS LISTED BELOW WILL RESULT IN THE VOIDING OF THIS LIMITED WARRANTY.

(1) Improper assembly, including failure to properly install all safety equipment.
(2) Improper installation (power & wiring included)
(3) Unauthorized alterations of goods.
(4) Goods operated when obviously in need of repair.
(5) Use of unauthorized repair parts.
(6) Irresponsible operation.
(7) Used to handle materials other than free flowing, non-abrasive and dry materials, as intended.
(8) Damaged through abusive use or accident.

LIMITATION OF LIABILITY: BUYER AGREES THAT IN NO EVENT SHALL HUTCHINSON/MAYRATH HAVE LIABILITY FOR DIRECT DAMAGES IN EXCESS OF THE CONTRACT PRICE OF THE GOODS IN RESPECT TO WHICH CLAIM IS MADE. BUYER FURTHER AGREES THAT IN NO EVENT SHALL HUTCHINSON/MAYRATH ON ANY CLAIM OF ANY KIND HAVE LIABILITY FOR LOSS OF USE, LOSS OF PROFITS, OR FOR ANY INDIRECT, INCIDENTAL OR CONSEQUENTIAL DAMAGES.

GENERAL SAFETY STATEMENT

This manual was written with the safety of the operator and others who work with the equipment as our prime concern. The instructions presented will help the reader learn SAFE day to day work practices. We want you as our partner in safety.

It is your responsibility as an owner, operator or supervisor to know what specific safety requirements and precautions exist and to make these known to all other personnel working with the equipment or in the area, so that they too may safely perform their duties and avoid any potentially hazardous situations.

Please remember safety equipment provides important protection for persons around a grain handling system that is in operation. Be sure ALL safety shields and protection devices are installed and properly maintained. If any shields or guards are damaged or missing, contact your dealer to obtain the correct items.

Avoid any alterations of the equipment. Such alterations may create a dangerous situation where serious injury or death may occur.

SAFETY ALERT SYMBOL

The symbol shown below is used to call your attention to instructions concerning your personal safety. Watch this symbol - it points out important safety precautions. It means “ATTENTION! Become alert! Your personal safety is involved!” Read the message that follows and be alert to the possibility of personal injury or death.

BE ALERT!

YOUR SAFETY IS INVOLVED

WARNING

Anyone who will operate or work around this machine shall first read this manual! This manual must be delivered with the equipment to its owner. Failure to read this manual and its safety instructions is a misuse of the equipment.

TABLE OF CONTENTS

General Safety Statement 1
SAFETY 1
Safety Alert Symbol 1
TABLE OF CONTENTS 2
DISASSEMBLY INSTRUCTIONS 4
ASSEMBLY INSTRUCTIONS 4
DESIGNATED WORK AREA 7
FULL LOAD OPERATING PROCEDURES 8
PTO Drive for Main Auger 8
Tractor/Auger Orientation 8
Attach PTO Driveline to tractor 8
Check the Following Before Adding Power: 8
When Adding Power: 8
SHUTDOWN 9
Normal Shutdown 9
Intermittent Operation Shutdown 9
Emergency Shutdown 9
Lockout 9
Auger Capacities 9
PARTS LIST P-1
Side Drive Conversion Kit Components P-2
PTO Driveline P-3
Gearbox P-4

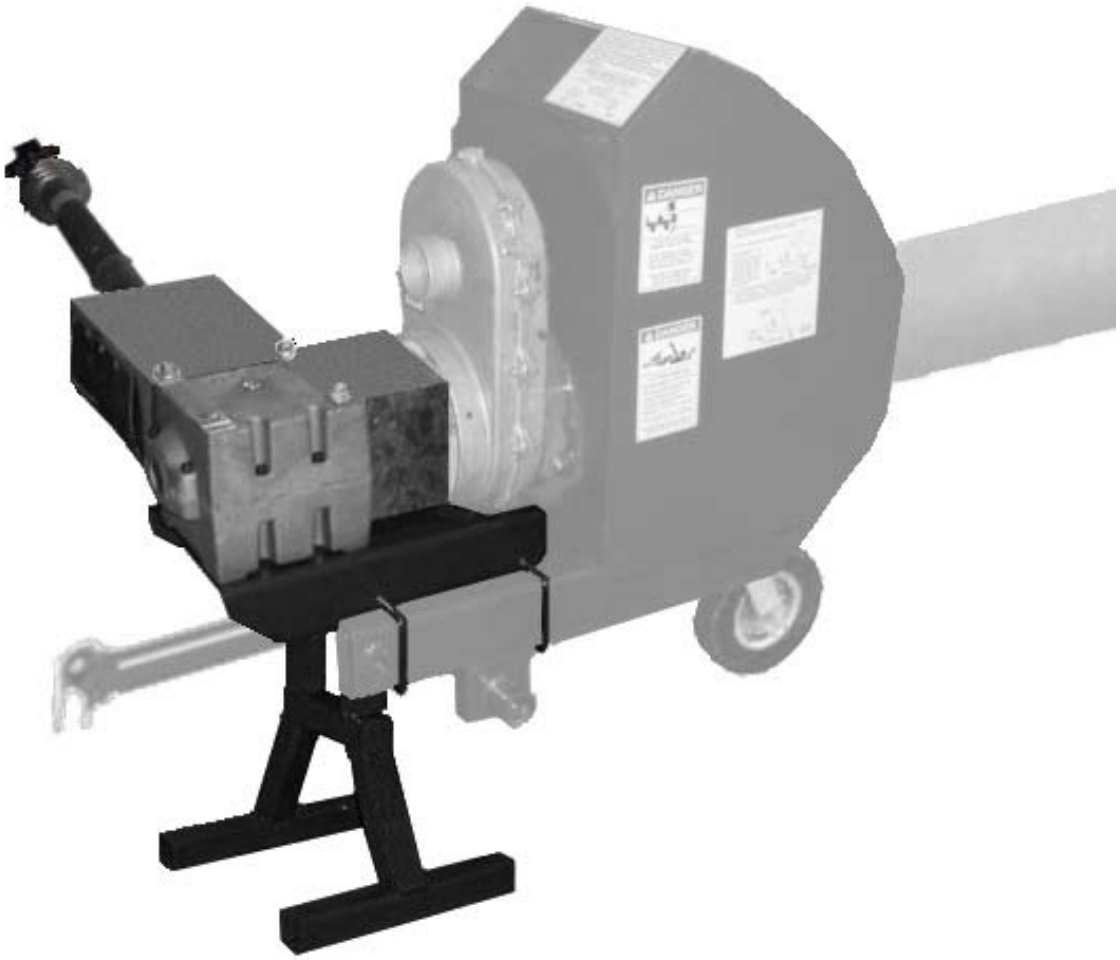

SIDE DRIVE CONVERSION KIT

FOR 12” SWING-AWAY AUGER
(GEAR DRIVE MODELS ONLY)

This publication provides assembly instructions to install the optional side drive conversion kit to a gear drive swing-away auger.

DISASSEMBLY INSTRUCTIONS

NOTE: If your swing away auger is currently set-up for direct drive operation, disassemble the following components as shown in Figure 1. None of the removed components will be used with the side drive conversion kit.

1. Remove the PTO driveline from the gearbox input shaft.
2. Remove the connection shield that covers the gearbox input shaft.
3. Remove the hanger bracket and PTO driveline storage hook.

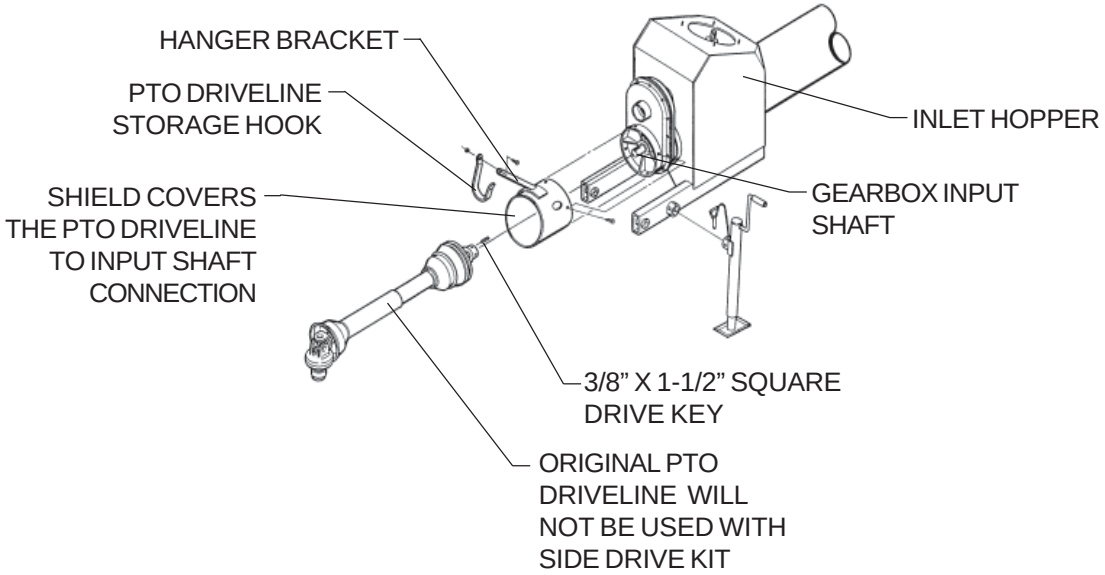

FIG. 1

ASSEMBLY INSTRUCTIONS

Assemble the following side drive conversion kit components as shown in Figure 2.

1. Slide a 1-1/2" bore flex coupler half ③ onto the input shaft of the inlet hopper. Install a 3/8" x 1-1/2" square key ⑤ into the coupler half. **DO NOT** tighten the setscrews down against the shaft at this point. (See Figure 2.)
2. Install the main gearbox support plate ⑧ between the inlet hopper hitch support tubes. This plate must be slipped into place from beneath the hopper. To do this, unpin the hitch at the rear of the inlet hopper (refer to operators manual shipped with the auger 1015709) and pivot the rear of the hitch tube down. Slide the gearbox support plate over the hitch tube, under the inlet hopper and into place just in front of the gearbox ②.
3. Use (4) ½” U-bolts and nylock nuts ⑬ to fasten the gearbox support plate ⑧ in place. Do not tighten the U-bolt nuts fully. The support plate must be allowed to move slightly when connecting the chain coupler together.

NOTE: The side drive kit can be driven from either the right or left hand side of the hitch. (See Figure 3.) The gearbox ② is shipped ready for installation on the left side (facing the auger). For right hand operation, the breather cap provided in the gearbox must be moved to the other side of the gearbox. All illustrations accompanying this manual, show the drive being assembled for a left hand drive. For right hand drive installations, simply assemble items accordingly on the right side of the hitch.

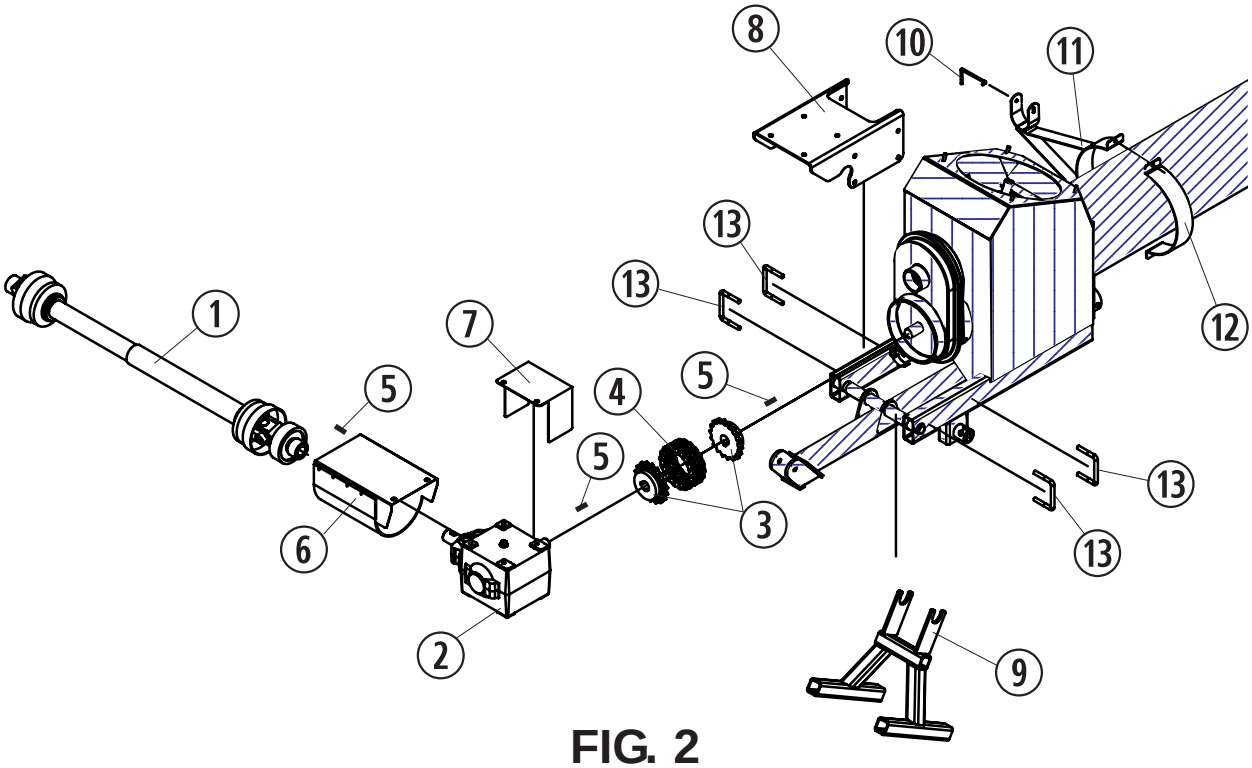

FIG. 2

4. Slide the other half of the flex coupler ③ onto the output shaft (1-1/2" diameter) of the gearbox ②. Install a 3/8" x 1-1/2" drive key ⑤ into the coupler half ③. **DO NOT** tighten the setscrews down against the gearbox shaft.

5. Install the gearbox ② onto the gearbox mounting plate ⑧. Use (4) 1/2" x 1-1/2" long hex head capscrews, 1/2" washers and 1/2" lockwashers.

6. Adjust the gearbox and mount plate assembly as necessary to align the input shaft of the auger gearbox and the output shaft of the side drive gearbox.

HINT: Adjust the gearbox mount and gearbox around such that a flex coupler half ③ can be on both input and output shafts at the same time. With a coupler half in such a position, tighten the gearbox-mount bracket to the hitch tube. Leave the gearbox loose until the flex coupler chain ④ is installed.

7. Once the gearbox shaft is aligned with the auger-input shaft, tighten the gearbox mount down. Adjust the gearbox such that a 1/8" gap exists between the end of the gearbox shaft and the auger shaft. Once the gearbox is properly placed, tighten all bolts that hold the gearbox to the gearbox mount and the gearbox mount to the inlet hopper.

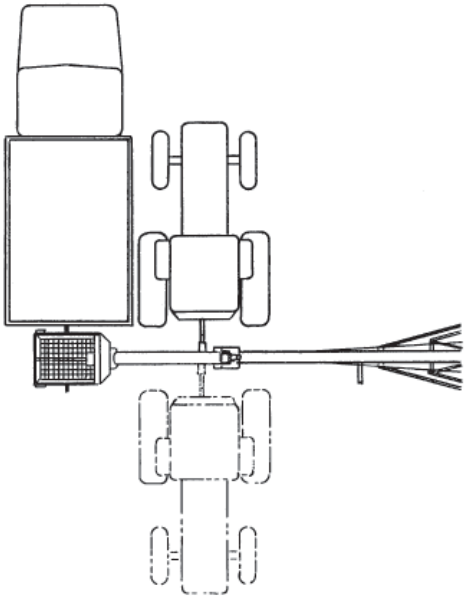

FIG. 3

ASSEMBLY INSTRUCTIONS - CON'T

8. Next, install the flex coupler chain ④ to the two coupler halves ③. Adjust the halves such that there is one coupler half on each shaft and neither half bridge the gap between the two shafts. Once the flex coupler chain is in place, tighten all of the setscrews on the coupler halves.

9. Fasten the longer (pin-stop type) PTO driveline ① to the gearbox input shaft using 3/8" x 1-1/2" drive key ⑤.

NOTE: DO NOT use the original (shorter) PTO driveline furnished with swing-away auger. ONLY use the longer PTO driveline ① provided with this kit.

IMPORTANT: For the setscrew in the PTO driveline ① yoke to be properly engaged on the gearbox ② input shaft, slide the yoke onto the shaft until the setscrew will sit on flat portion of gearbox shaft. See Figure 4.

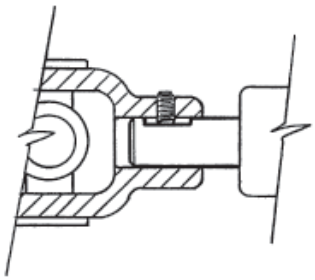

FIG. 4

Do not extend the gearbox ② input shaft beyond the inside edge of the yoke.

10. Slide the PTO/gearbox shield ⑥ over the PTO driveline ① and secure shield and the coupler chain shield ⑦ to the gearbox ② with three 1/2" x 1" HHCS, 1/2" washers and 1/2" lockwashers.
11. Fasten PTO driveline support ⑪ to auger housing using halfband ⑫ and two 5/16" x 1-1/2" long (grade 5) hex head capscrews and nuts. Position driveline support a distance of 18" from inlet hopper.
12. Install retaining pin ⑩ by slipping the short bent end of pin through hole in PTO driveline support ⑪ and through slot of other side. Allow long end of pin ⑩ to rotate down. This will secure pin in place. Set PTO driveline ① into the support ⑪ to be sure support is installed properly. See Figure 5.

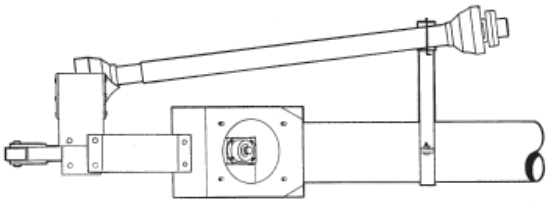

FIG. 5

13. Place the jack stand weldment ⑨ underneath the pivoting tube of the hitch. Lower the hitch tube pivot into the proviced slots on the jack stand. The jack stand is used to suppport the auger while operating with the side drive kit.

DESIGNATED WORK AREA

Before starting the auger, designated work area should be established and properly marked. The following diagrams on this page will show the manufacturers designated work areas. These areas shall be marked off with colored nylon or plastic rope hung as portable barriers to define the designated work areas.

RULES FOR A SAFE WORK AREA

1. Under no circumstances should persons not involved in the operation be allowed to trespass into the work area.
2. It shall be the duty of all operators to see that children and/or other persons stay out of the work areas! Trespass into the work area by anyone not involved in the actual operation, or trespass into a hazard area by anyone, shall result in an immediate shut down by the operator.
3. It shall be the responsibility of all operators to see that the work area has secure footing, is clean and free of all debris, and tools which might cause accidental tripping and/or falling. It shall also be their responsibility to keep the work area clean and orderly during the operation.

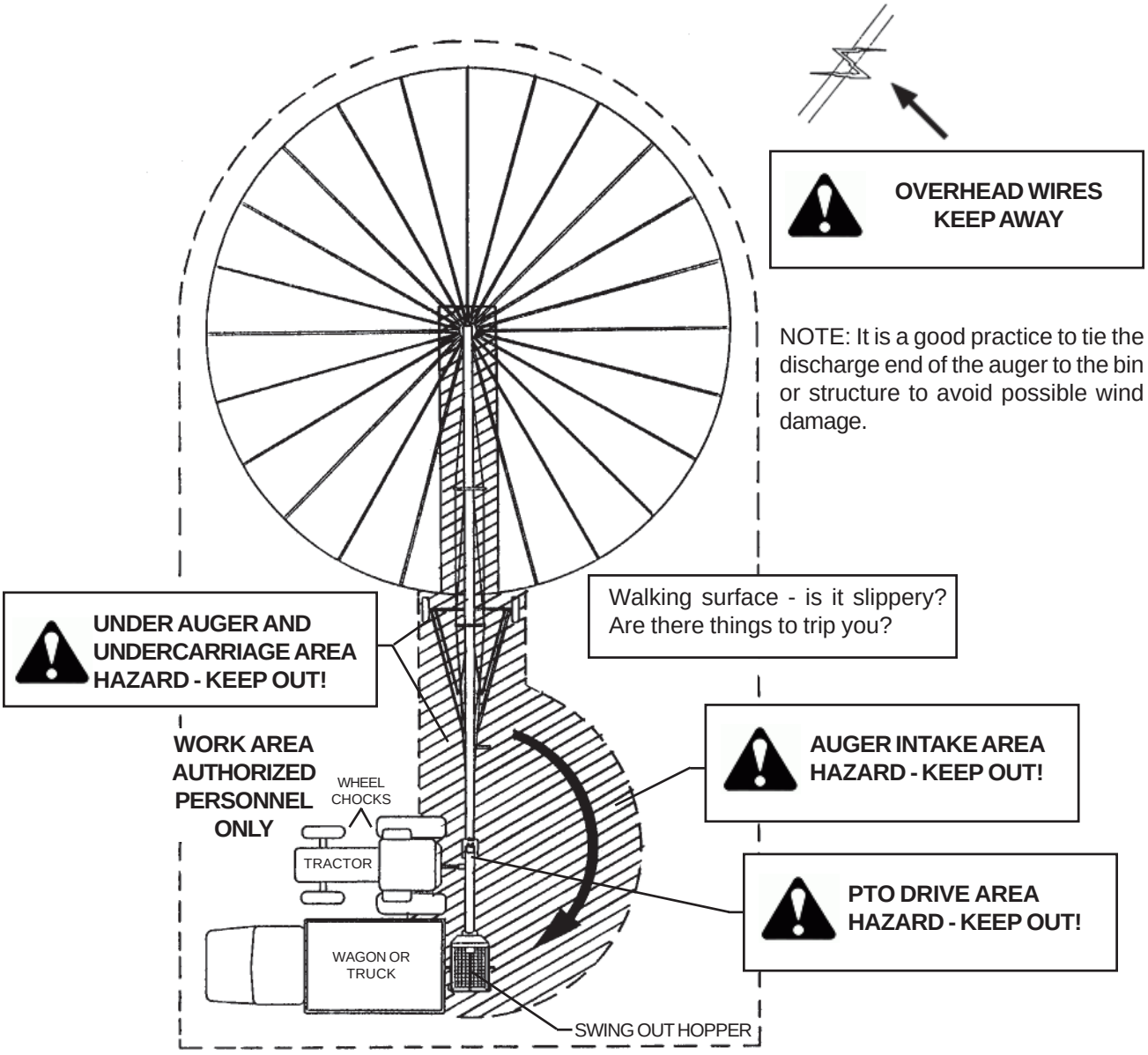

FIG. 6

FULL LOAD OPERATING PROCEDURES

It is a good practice to visually inspect the auger periodically during the actual operation. You should be alert for unusual vibrations, noises and the loosening of any fasteners.

OBSERVE WORK AREA RESTRICTIONS. (SEE WORK AREA DIAGRAM PAGE 7.) MAKE CERTAIN EVERYONE IS CLEAR BEFORE OPERATING THE MACHINE.

PTO DRIVE FOR MAIN AUGER

Only use an agricultural tractor with 1000 RPM Power Take-Off. Before starting the tractor, be certain power to PTO is off.

The 12" augers may be operated at speeds up to 540 RPM.

Auger flight speed in excess of recommended speed causes excessive wear.

Do not operate the auger at speeds below 450 RPM as high torque requirements may damage the auger.

NOTE: The PTO driveline is equipped with a shear bolt at the tractor connection. The shear bolt protects the auger from damage if the auger becomes plugged or subjected to high loads.

TRACTOR/AUGER ORIENTATION

Orient the tractor and auger so that the surfaces they are resting on are parallel and the centerline of the tractor and the gearbox shaft are in line as shown in Figure 7.

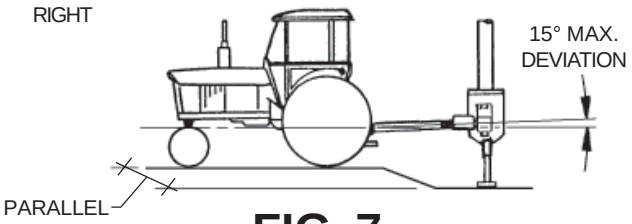

FIG. 7

Do not orient the tractor and auger so that the surfaces they are resting on are as shown in Figure 8.

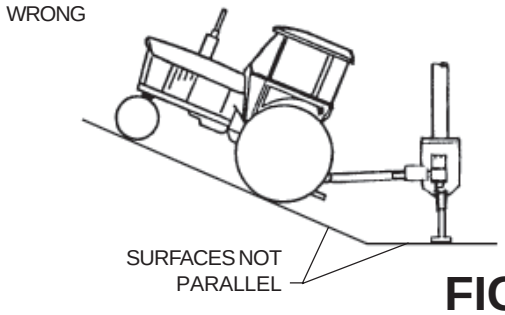

FIG. 8

ATTACH PTO DRIVELINE TO TRACTOR

Align PTO driveline with tractor. The PTO driveline furnished with the kit is a pin stop type, that is, the two telescoping sections will not separate. It is a good practice to operate the PTO driveline in as short a configuration as possible. Keep the PTO driveline in as straight a line as possible during operation. When connecting tractor and auger, always make sure the tractor axle and the auger are parallel. Also, keep the centerline of the tractor axle and the driveline perpindicular (90°) to one another (see Figure 9, below).

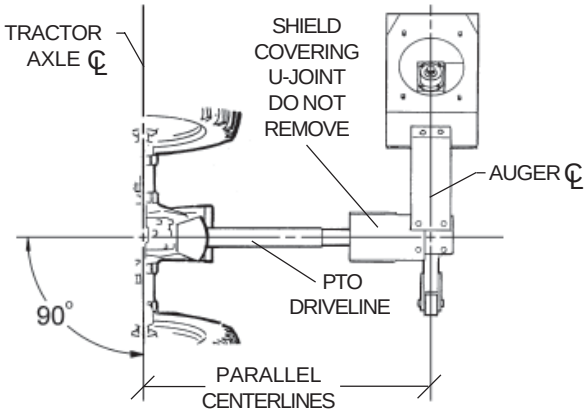

FIG. 9

CHECK THE FOLLOWING BEFORE ADDING POWER:

1. Be certain that the PTO driveline is securely attached to the auger and the tractor.
2. Never use a PTO driveline without a rotating shield in good working order that can turn freely on the shaft.
3. Check the U-joints. Keep the U-joint angles in line with the centerline of the tractor.

WHEN ADDING POWER:

The tractor operator should have a full view of the auger work area and check that all personnel are clear of hazard areas before adding power.

IMPORTANT: ENGAGE PTO AT A SLOW RPM TO MINIMIZE SHOCK LOADS. THEN WORK UP RPM TO RECOMMENDED SPEED.

NORMAL SHUTDOWN

When shutting down the auger make certain that the hopper and auger are empty before stopping the unit. Before the operator leaves the work area, the power source shall be locked out. (See Lockout).

INTERMITTENT OPERATION SHUTDOWN

NOTE: When augers are stopped and restarted under full load, it may result in damage to the auger.

Consideration should be given to the proper size auger for a batch drying, or any intermittent type operations. Using a larger diameter auger and reducing its load level will be far better than subjecting a smaller diameter auger to high loads. If an auger is kept from absolute filing, it will make start-up easier and will convey more efficiently.

EMERGENCY SHUTDOWN

Should the auger be immediately shutdown under load - disconnect and lockout the power source. Clear as much grain from hopper and auger as you can. Never attempt to restart when full. Use clean-out doors in the bottom of main auger inlet hopper.

NOTE: Starting the unit under load may result in damage to the auger. Such damage is considered abuse of the equipment. When as much grain as possible has been cleared, reconnect power source and clear auger gradually.

LOCKOUT

If the operator must leave the work area, or whenever servicing or adjusting, the auger must be stopped and the power source turned off. Precaution should be made to prevent anyone from operating the auger when the operator is absent from the work area.

PTO DRIVE: Remove ignition key or coil wire from power source. (If this is impossible, remove the PTO driveline shaft from the work area.)

AUGER CAPACITIES

The results or capacities of screw conveyors or augers can vary greatly under different conditions.

Different materials, moisture content, amounts of foreign matter, angle of operation, methods of feeding and speed all play a role in performance of the auger. An auger operating at a 45° incline could be cut 20% in capacity over an auger operating horizontally. Twenty-five (25%) moisture could cut capacity by as much as 40% under some conditions.

12” SWING AWAY AUGER SIDE DRIVE KIT

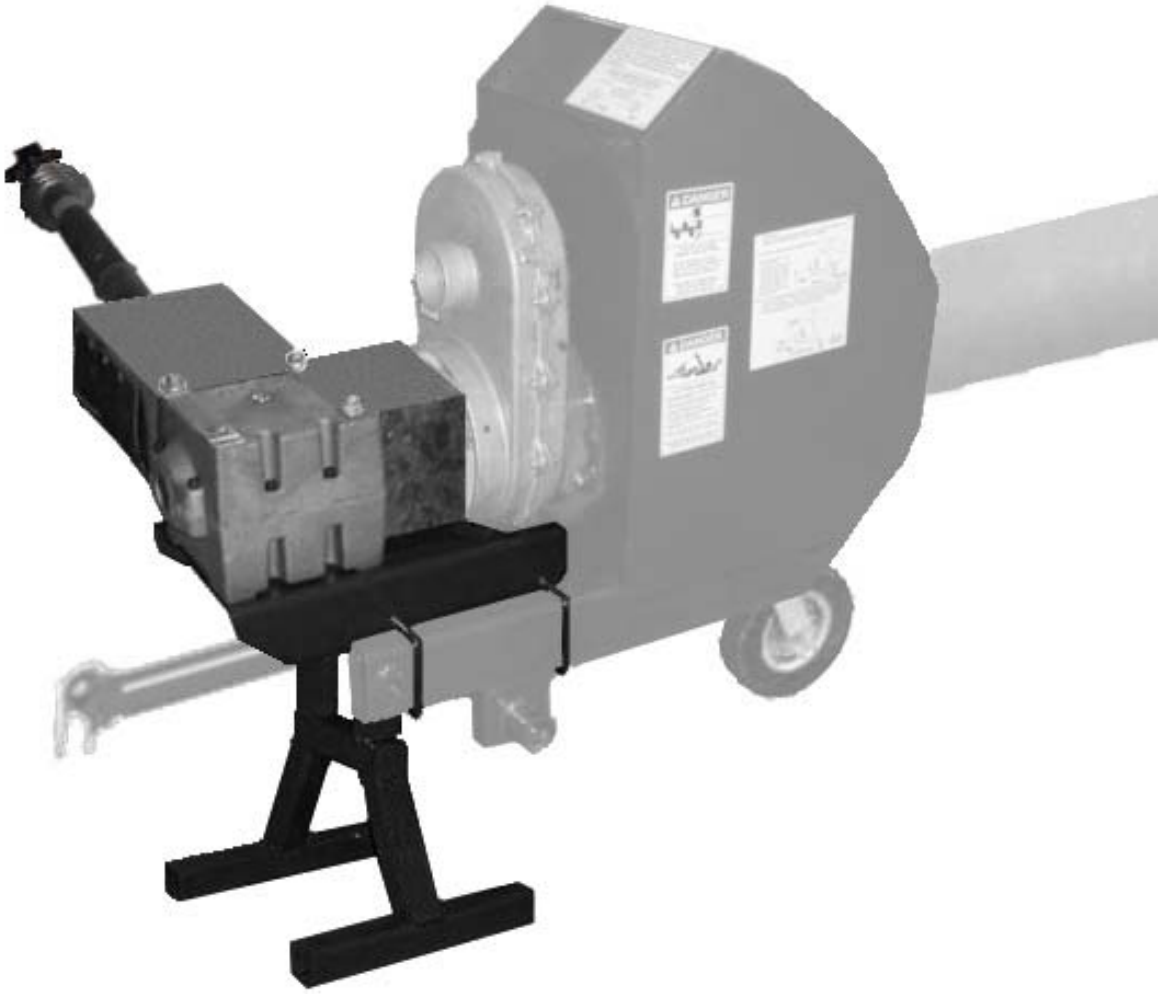

PARTS LIST

SIDE DRIVE CONVERSION KIT COMPONENTS

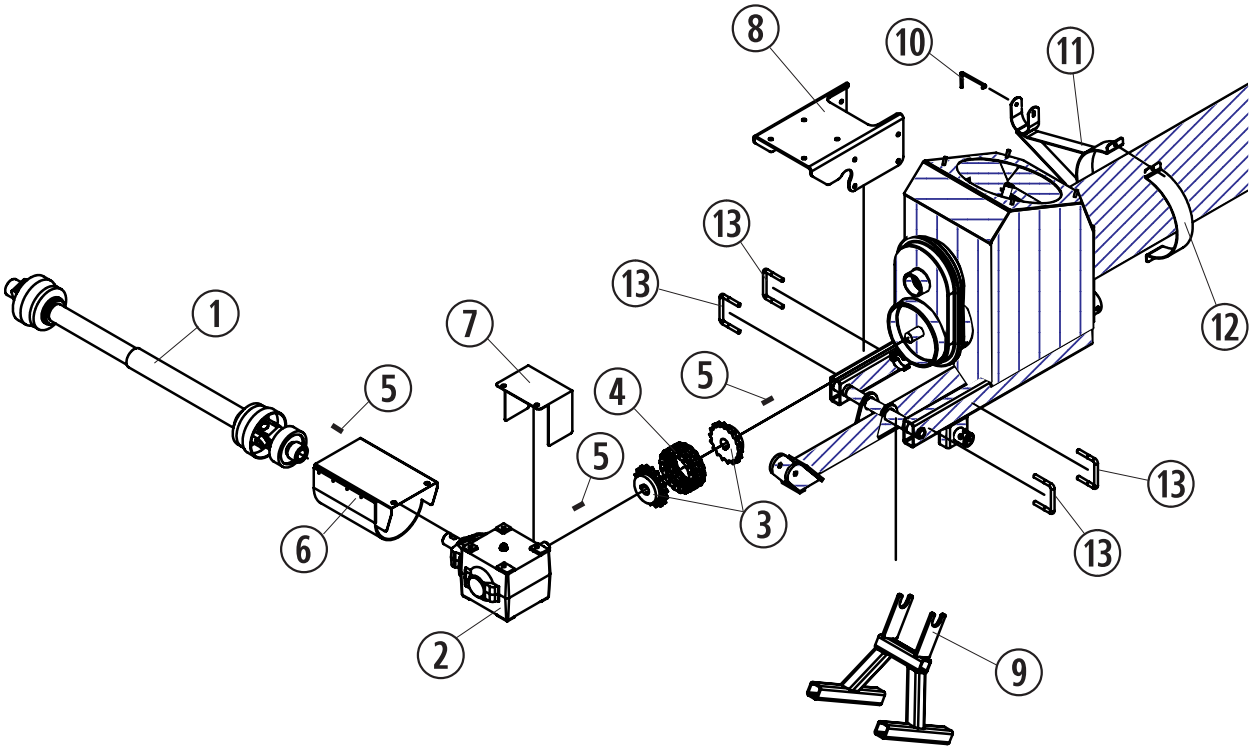

REF. NO.	PART NO.	DESCRIPTION
1	1021297	Pin Stop Type PTO Driveline - - 1000 RPM
2	1021282	Gearbox GB 600 1.87 to 1 Ratio
3	1021245	Flex Coupler Half 1-1/2" Bore
4	1021246	Flex Coupler Chain
5	4049A1	3/8" X 1-1/2" Square Key
6	1021323	PTO / Gearbox Shield
7	1027809	Chain Guard Coupler Shield
8	1027807	Main Plate
9	1027810	Jack Stand Weldment
10	3338A1	Retaining Pin f/PTO Driveline Support
11	1021312	PTO Transport Support
12	1021311	Halfband f/PTO Support
13	1027808	U-Bolt

PTO DRIVELINE

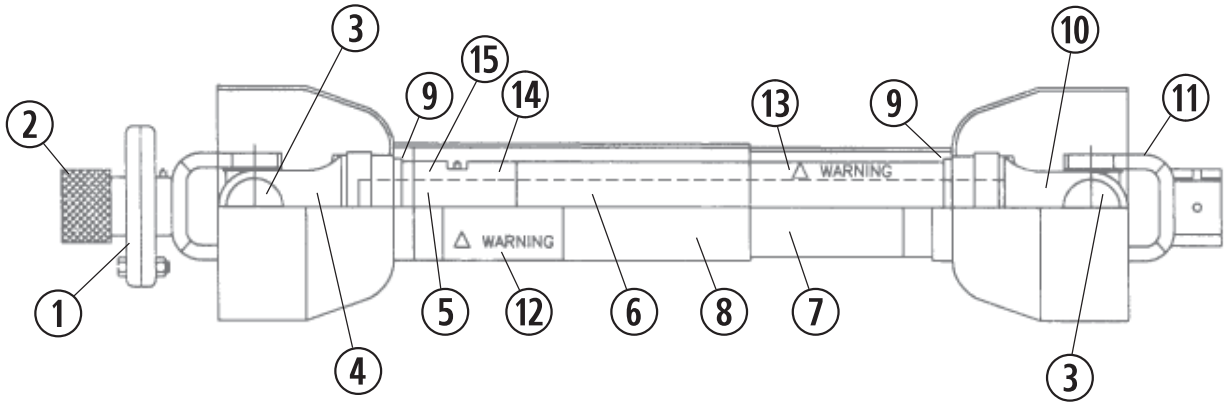

NOTE: Repair parts for PTO drivelines can also be purchased directly from:
G & G Mfg. Co., Inc.
P.O. Box 12086
Omaha, NE 68112-2086

U-Joint Type -35R
Auger End 1-3/4" Bore
with 3/8" Keyseat
Tractor End 1-3/8-21 Spline

REF. NO.	DESCRIPTION	HUTCHINSON/ MAYRATH PART NO.	G & G PART NO.
1	Snap Hitch Ball Shear Yoke F/1000 RPM includes shear bolt	1021334	495-3521
2	Snap Hitch Repair Kit with knurled collar	1014346	02010495
3	PTO Repair Kit	41239	302-3500
4	Yoke for Square Shaft	1014348	177-3500
5	Square Shaft 1-3/16" x 26-13/16"	1014349	136-1900
6	Torque Tubing 2-1/8" O.D. x 1-7/8" I.D.	1014350	140-3500
7	Inner Plastic Shield	1021335	30013560
8	Outer Plastic Shield	1021336	30003560
9	Bearing Shield Kit	1014353	128-1200
11	Implement Yoke 1-3/4" Round Bore	1021337	184N3528
12	Danger Label for Outside Shield	1001298	30000800
13	Danger Label for Inside Shield	1014356	30000801
14	Slip Sleeve with Pin Stop	1014347	194-35PS
15	Spacer Bearing	1021338	129-1400
- -	Shear Bolt & Nut Kit	1021355	N/A

Note A: Shear Bolt Kit includes (6) 3/8"-16 x 1-1/4" long Grade 2 hex bolts and locknuts.

PARTS LIST

GEARBOX

(Complete Part No. 1021282)

USED ON SIDE DRIVE CONVERSION KIT
1-3/4" DIA. INPUT SHAFT: 1-1/2" DIA. OUTPUT SHAFT
1/2" MOUNTING HOLES: 6-1/2" SQ. MOUNTING PATTERN
RATIO: 1.875 TO 1

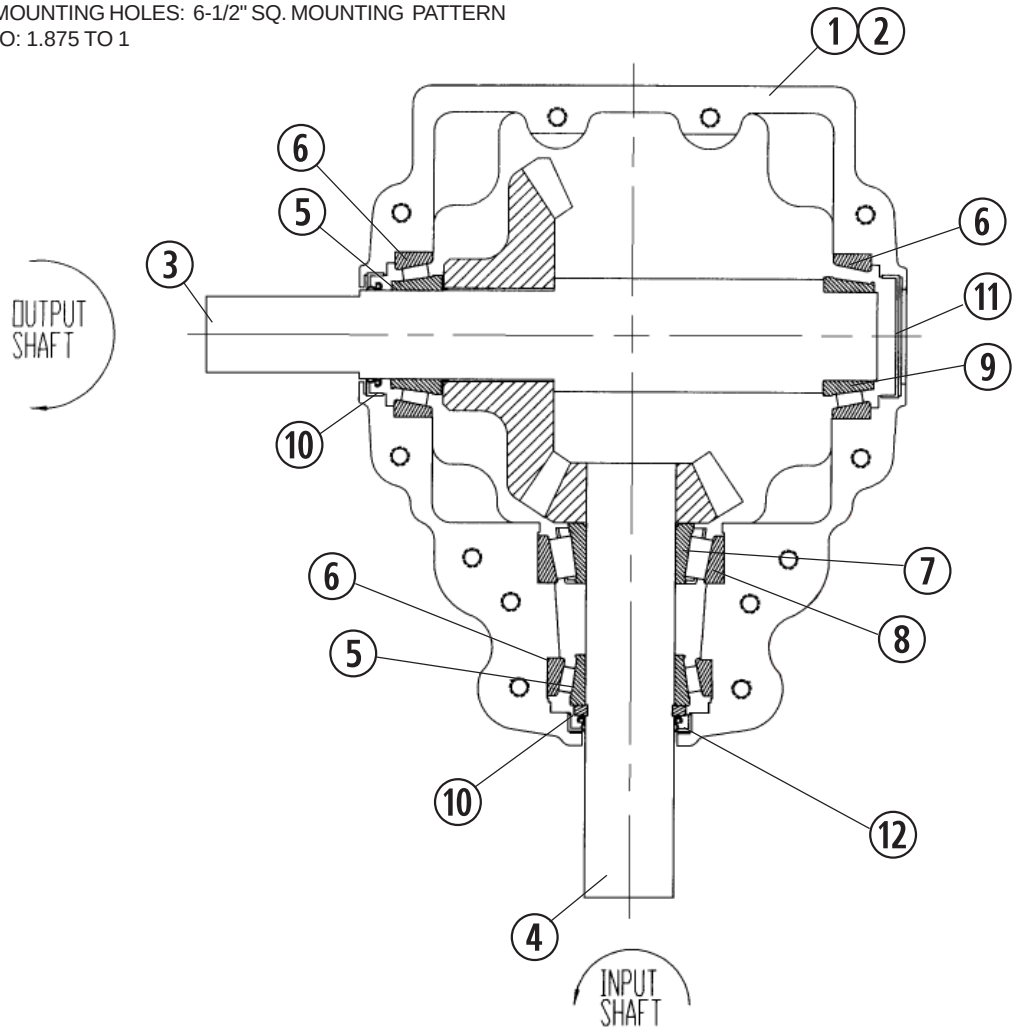

REF. NO.	QTY. REQ'D.	PART NO.	DESCRIPTION
1	1	1021354	Casting, Mach 600 (1.857 to 1)
2	1	1021339	Casting, Mach 600 (1.857 to 1)
3	1	1021341	Assembly, Cross Shaft / Gear
4	1	1021342	Assembly, Stub Shaft / Gear
5	2	1021343	Bearing, Cone 1.750 VN-25581
6	3	1021344	Bearing, Cup 3.2650 VN-25520
7	1	1021345	Bearing, Cone 1.750 VN-3782
8	1	1021346	Bearing, Cup 3.6178 VN-3720
9	1	1021347	Bearing, Cone 25580
10	2	1021348	Seal, 1.750 - 2.437 - .312 (R) TC
11	1	1021349	End Cap, CP-2.450 - .312 D.#3313
12	1	1021350	Retaining Ring, Ext. 1.75 SHFT
Not Shown	12	1006232	Bolt 3/8" NC x 2.25" SHCS
Not Shown	2	1021351	Plug, 1/2 - 14 NPT SCHD w/3M
Not Shown	1	1021352	Bushing, 1/2 NPT to 1/8 NPT
Not Shown	1	1021353	Plug Vent 5PSI

Hutchinson/Mayrath

A Division of **GLOBAL** *Industries, Inc.*

P.O. Box 629 514 W. Crawford Clay Center, KS 67432
Phone 785-632-2161 1-800-523-6993 FAX 785-632-5964