# 9" U-TROUGH REDUCER DRIVE
# 3:1 CHAIN REDUCTION
# 4:1 GEAR REDUCTION

## OWNER'S & OPERATOR'S MANUAL

**Effective February 17, 2004**

**Publication No. 1026458**


***Hutchinson/Mayrath/TerraTrack***

*A Division of **GLOBAL** Industries, Inc.*

P.O. Box 629 • 514 W. Crawford • Clay Center, KS 67432
Phone 785-632-2161 • 1-800-523-6993 • FAX 785-632-5964

**Hutchinson/Mayrath/TerraTrack**

*A Division of **GLOBAL** Industries, Inc.*

# POLICIES AND PROCEDURES

**PRICES:** Prices in effect at time of shipment will apply. Prices are subject to change without notice. All prices are F.O.B. Clay Center, Kansas. Orders shipped from locations other than Clay Center, Kansas will be subject to additional charges, such as back freight and/or additional freight.

**SERVICE CHARGE:** A service charge will be assessed on all past due balances as permitted by state law not to exceed 1-1/2% per month.

**MIINMUM ORDER:** Processing and handling costs necessitate a minimum charge of $15.00 net on all orders.

**BACK ORDERS:** Back orders will be shipped as they become available. Contact Hutchinson/Mayrath/TerraTrack Customer Service for alternative shipping options or if cancellation is desired.

**DAMAGED GOODS:** It is the consignee's responsibility to check all shipments thoroughly upon receipt of goods. If any damage is discovered, it must be noted on the freight bill of lading before signing. The consignee must make necessary claims against the respective freight line. All damage claims must be submitted within 30 days of delivery receipt.

**SHORTAGES:** All shortages must be noted at time of delivery receipt. Shortages must be noted on the freight bill of lading before signing. Hutchinson/Mayrath/TerraTrack must be advised of all concealed shortages upon discovery. Once notified of concealed shortages Hutchinson/Mayrath/TerraTrack will advise corrective action to be taken.

**RETURN OF GOODS:** All returns must be approved by Hutchinson/Mayrath/TerraTrack prior to shipment. All return requests will be issued a return authorization number. NO RETURNS WILL BE ACCEPTED WITHOUT A RETURN AUTHORIZATION NUMBER AND PRIOR AUTHORIZATION FROM THE FACTORY. All returns must be shipped prepaid. A 15% restocking charge will be applied to all returned merchandise. Custom products may not be returned for credit. Only current products in new and saleable condition may be returned. No safety devices may be returned for credit.

**MODIFICATIONS:** It is the policy of Hutchinson/Mayrath/TerraTrack to improve its product whenever possible and practical to do so. We reserve the right to make changes, improvements and modifications at any time without incurring the obligation to make such changes, improvements and modifications on any equipment sold previously.

**LIMITED WARRANTY:** (a) For a period of (1) year after receipt of goods by the original consumer buyer, Hutchinson/Mayrath/TerraTrack will supply free of charge replacement parts for parts that prove defective in workmanship or material. Defective parts must be returned freights prepaid to a specified Hutchinson/Mayrath/TerraTrack location. Only Hutchinson/Mayrath/TerraTrack original repair parts may be used for warranty repairs.
(b) This limited warranty does not extend to parts designed to wear in normal operation and be replaced periodically, or to damage caused by negligence, accident, abuse or improper installation or operation.
(c) GOODS NOT MANUFACTURED BY HUTCHINSON/MAYRATH/TERRATRACK CARRY ONLY THE MANUFACTURER'S WARRANTY.
(d) THIS UNDERTAKING IS IN LIEU OF ALL OTHER WARRANTIES, EXPRESSED OR IMPLIED, INCLUDING MERCHANTABILITY AND FITNESS FOR A PARTICULAR PURPOSE.

**FAILURE TO FOLLOW THE INSTRUCTIONS CONTAINED IN THE OWNER'S & OPERATOR'S MANUALS AND THE ITEMS LISTED BELOW WILL RESULT IN THE VOIDING OF THIS LIMITED WARRANTY.**

(1) Improper assembly, including failure to properly install all safety equipment.
(2) Improper installation (power & wiring included)
(3) Unauthorized alterations of goods.
(4) Goods operated when obviously in need of repair.
(5) Use of unauthorized repair parts.
(6) Irresponsible operation.
(7) Used to handle materials other than free flowing, non-abrasive and dry materials, as intended.
(8) Damaged through abusive use or accident.

**LIMITATION OF LIABILITY:** BUYER AGREES THAT IN NO EVENT SHALL HUTCHINSON/MAYRATH/TERRATRACK HAVE LIABILITY FOR DIRECT DAMAGES IN EXCESS OF THE CONTRACT PRICE OF THE GOODS IN RESPECT TO WHICH CLAIM IS MADE. BUYER FURTHER AGREES THAT IN NO EVENT SHALL HUTCHINSON/MAYRATH/TERRATRACK ON ANY CLAIM OF ANY KIND HAVE LIABILITY FOR LOSS OF USE, LOSS OF PROFITS, OR FOR ANY INDIRECT, INCIDENTAL OR CONSEQUENTIAL DAMAGES.

# GENERAL SAFETY STATEMENT

This manual was written with the safety of the operator and others who work with the equipment as our prime concern. The instructions presented will help the reader learn SAFE day to day work practices. We want you as our partner in safety.

It is your responsibility as an owner, operator or supervisor to know what specific safety requirements and precautions exist and to make these known to all other personnel working with the equipment or in the area, so that they too may safely perform their duties and avoid any potentially hazardous situations.

Please remember safety equipment provides important protection for persons around a grain handling system that is in operation. Be sure that ALL safety shields and protection devices are installed and properly maintained. If any shields or guards are damaged or missing, contact your dealer to obtain the correct items.

Avoid any alterations of the equipment. Such alterations may create a dangerous situation where serious injury or death may occur.

# SAFETY ALERT SYMBOL

The symbol shown below is used to call your attention to instructions concerning your personal safety. Watch this symbol - it points out important safety precautions. It means "ATTENTION! Become alert! Your personal safety is involved!" Read the message that follows and be alert to the possibility of personal injury or death.

# BE ALERT! YOUR SAFETY IS INVOLVED.

## WARNING

Anyone who will operate or work around this machine shall first read this manual! This manual must be delivered with the equipment to its owner. Failure to read this manual and its safety instructions is a misuse of the equipment.

# TABLE OF CONTENTS

General Safety Statements . . . . . 1

Safety Alert Symbol . . . . . 1

Operator Qualifications . . . . . 3

Sign-off Sheet . . . . . 3

Machine Inspection . . . . . 3

Designated Work Area . . . . . 4

Operating Procedures . . . . . 4-8

- Electric Motor Drive Information . . . . . 5
- Flight Speed Information . . . . . 4-5
- Start-up . . . . . 6
- Break-in Information . . . . . 6
- Full Load Operation . . . . . 7
- Shutdown . . . . . 7
- Lockout . . . . . 7
- Clean-up . . . . . 7
- Trouble Shooting . . . . . 8

Assembly Instructions . . . . . 10-14

Safety Signs . . . . . P-1

Parts List . . . . . P-2 thru P-5

# OPERATOR QUALIFICATIONS

Operation of this auger shall be limited to competent and experienced persons. In addition, anyone who will operate or work with this system must use good common sense. In order to be qualified, they must also know and meet all other requirements, such as:

1. Some regulations specify that no one under the age of 16 may operate power machinery. This includes augers. It is your responsibility to know what these regulations are in your own area or situation.
2. Current OSHA regulations state in part: "At the time of initial assignment and at least annually thereafter, the employer shall instruct every employee in the safe operation and servicing of all equipment with which the employee is, or will be involved."*
3. Unqualified persons are to stay out of the work area.
4. A person who has not read and understood all operating and safety instructions is not qualified to operate the machine.

*** Federal Occupational Safety & Health Standards for Agriculture Subpart D, Section 1928.57 (a)(6).**

# SIGN OFF SHEET

As a requirement of OSHA it is necessary for the employer to train the employee in the safe operation and safety procedures of this auger. We include this sign off sheet for your convenience and personal record keeping.

| DATE | EMPLOYER SIGNATURE | EMPLOYEE SIGNATURE |
|---|---|---|
| | | |
| | | |
| | | |
| | | |
| | | |
| | | |
| | | |
| | | |

# MACHINE INSPECTION

After delivery of your new auger and/or completion of assembly and before each use, inspection of the machine is mandatory. This inspection should include, but not be limited to:

1. Check to see that all guards listed in the assembly instructions are in place and secured and functional.
2. Check all safety signs and replace any that are worn, missing or illegible. They are listed in the parts section. Safety signs may be obtained from your Dealer or ordered from the factory.
3. Are all fasteners tight?

# DESIGNATED WORK AREA

Before starting the auger, a designated work area should be established around it.

**Under no circumstances should persons not involved in the operation be allowed to trespass into the work area.**

**It shall be the duty of all operators to see that children and/or other persons stay out of the work area! Trespass into the work area by anyone not involved in the actual operation shall result in an immediate shutdown by the operator.**

**It shall be the responsibility of all operators to see that the work area has secure footing, is clean and free of all debris, and tools which might cause accidental tripping and/or falling.**

# OPERATING INSTRUCTIONS

## AUGER CAPACITIES

The capacities of screw conveyors (augers) can vary greatly under varying conditions. Different materials, moisture content, amount of foreign matter, angle of operation, methods of feeding and speed all play a role in the performance of the auger. An auger operating at a 45° incline could operate at a capacity 20% less than an auger operating horizontally. Moisture content at 25% could cut capacity back by as much as 40% under some conditions. If an inclined auger has one foot of grain over the inlet flight, it will probably get better capacity than if it had only a one inch covering. On the other hand, an auger in the bottom of a cone shaped pit or under a bulk tank with approximately four feet or more of grain on top of it may be overfed. This overfeeding would be caused from the weight of the grain over the intake forcing more into the auger than it can efficiently move. The result would be an increased horsepower requirement, extra strain on the driveline, and possibly a complete stalling out. Under the "extra" grain pressure conditions a control gate should be used.

## SCREW CONVEYOR GENERAL CAPACITIES, FLIGHT SPEEDS & DRIVE INFORMATION

Based on horizontal operation and clean, dry corn approximately 90% load, which in most cases is maximum. Capacities will vary according to grain, grain conditions, loading method, etc. **DO NOT** exceed maximum flight speed listed in chart. Units with intermediate bearings should run a maximum of 500 RPM.

| Drive Type | Motor HP | No. of Belts | Belt Length | P.D.* Driver | P.D. Driven | Flight RPM |
|---|---|---|---|---|---|---|
| 3:1 Reducer Drive | 3-5 | 2 | B54 | 3.4" | 11.7" | 180 |
| | 7 1/2 | 3 | B54 | 3.4" | 11.7" | 180 |
| | 3-5 | 2 | B54 | 4.2" | 11.7" | 220 |
| | 7 1/2 | 3 | B54 | 4.2" | 11.7" | 220 |
| | 10 | 3 | B57 | 4.2" | 11.7" | 220 |
| | 3-5 | 1 | B57 | 5" | 11.7" | 260 |
| | 7 1/2 | 2 | B57 | 5" | 11.7" | 260 |
| | 10 | 2 | B57 | 5" | 11.7" | 260 |
| | 3-5 | 1 | B57 | 5.6" | 11.7" | 290 |
| | 7 1/2 | 1 | B57 | 5.6" | 11.7" | 290 |
| | 10 | 2 | B57 | 5.6" | 11.7" | 290 |
| | 3-5 | 1 | B57 | 6.2" | 11.7" | 316 |
| | 7 1/2 | 1 | B57 | 6.2" | 11.7" | 316 |
| | 10 | 2 | B57 | 6.2" | 11.7" | 316 |

* Pitch Diameter

# OPERATING INSTRUCTIONS - CONT.

| Drive Type | Motor HP | No. of Belts | Belt Length | P.D. Driver | Driven P.D. Driven | Flight RPM |
|---|---|---|---|---|---|---|
| 4:1 Reducer Drive | 5 | 2 | B-60 | 4.2" | 15.4" | 125 |
| | 7 1/2 | 2 | B-62 | 4.2" | 15.4" | 125 |
| | 10 | 3 | B-62 | 4.2" | 15.4" | 125 |
| | 15 | 4 | B-62 | 4.2" | 15.4" | 125 |
| | 5 | 2 | B-54 | 4.2" | 12.4" | 155 |
| | 7 1/2 | 2 | B-54 | 4.2" | 12.4" | 155 |
| | 10 | 3 | B-54 | 4.2" | 12.4" | 155 |
| | 15 | 4 | B-57 | 4.2" | 12.4" | 155 |
| | 5 | 1 | B-57 | 5" | 12.4" | 180 |
| | 7 1/2 | 2 | B-57 | 5" | 12.4" | 180 |
| | 10 | 2 | B-57 | 5" | 12.4" | 180 |
| | 15 | 3 | B-59 | 5" | 12.4" | 180 |
| | 5 | 1 | B-57 | 6" | 12.4" | 220 |
| | 7 1/2 | 1 | B-57 | 6" | 12.4" | 220 |
| | 10 | 2 | B-57 | 6" | 12.4" | 220 |
| | 15 | 2 | B-59 | 6" | 12.4" | 220 |
| | 20 | 3 | B-59 | 6" | 12.4" | 220 |
| | 25 | 3 | B-60 | 6" | 12.4" | 220 |
| | 5 | 1 | B-51 | 5.4" | 9.4" | 260 |
| | 7 1/2 | 1 | B-51 | 5.4" | 9.4" | 260 |
| | 10 | 2 | B-51 | 5.4" | 9.4" | 260 |
| | 15 | 2 | B-54 | 5.4" | 9.4" | 260 |
| | 20 | 3 | B-54 | 5.4" | 9.4" | 260 |
| | 25 | 4 | B-54 | 5.4" | 9.4" | 260 |
| | 5 | 1 | B-46 | 5.4" | 7.4" | 325 |
| | 7 1/2 | 1 | B-48 | 5.4" | 7.4" | 325 |
| | 10 | 2 | B-48 | 5.4" | 7.4" | 325 |
| | 15 | 2 | B-50 | 5.4" | 7.4" | 325 |
| | 20 | 3 | B-50 | 5.4" | 7.4" | 325 |
| | 25 | 4 | B-51 | 5.4" | 7.4" | 325 |

**Make certain everyone is clear before operating the machine.**

## ELECTRIC MOTOR DRIVES

Always use a motor with required H.P. suggested in the charts on pages 4 & 5. Use a motor that operates at 1750 RPM. Electric motors and controls shall be installed by a qualified electrician and must meet the standards set by the National Electrical Code and all local and state codes.

A magnetic starter should be used to protect your motor when starting and stopping. It should stop the motor in case of power interruption, conductor fault, low voltage, circuit interruption or motor overload. Then the motor must be restarted manually. Some motors have built-in thermal overload protection. If this type motor is used, use only those with manual reset.

**Reset and motor starting controls must be located so that the operator has full view of the entire operation.**

**A main power disconnect switch capable of being locked only in the OFF position shall be provided. This shall be locked whenever work is being done on the U-Trough Auger.**

The horsepower recommendations are based on clean, dry shelled corn or wheat. High moisture grain (above 15%) will require greater power. The maximum possible capacity will be less with high moisture grain than with dry grain. Use chart on Page 4 & 5 to determine size of motor required.

## FLIGHT SPEED INFORMATION

Proper auger flight speed is important for efficient operation of the auger.

1. If the flight speed is too fast, excessive wear will result.
2. If the flight speed is too slow and the auger flighting is permitted to "load-up", high torque will be required to turn the auger flighting, and damage to the auger can result. Control the amount of grain fed into the auger inlet. See charts on page 4 & 5 for recommended flight speeds.

# OPERATING INSTRUCTIONS - CONT.

## START-UP

It is important to be familiar with the following routine operation procedures before attempting start-up.

During the operation of the auger, one person shall be in a position to monitor the operation. Inspect the drive before adding power and know how to shut down in an emergency. (See page 7.) Visually inspect the auger periodically during operation. For efficient and safe operation, be aware of all the adjustments and checks which should be performed.

**Make certain everyone is clear before operating equipment.**

**The operator shall be aware of any unusual vibrations, noises and the loosening of any fasteners.**

**Keep all safety shields and devices in place.**

**Keep hands, feet and clothing away from moving parts.**

**Shut off and lock out power to adjust, service or clean.**

## BREAK-IN INFORMATION

Any screw conveyor when it is new or after it sets idle for a season should go though a "break-in" period. The auger should be run at partial capacity until the screw becomes polished and smooth before attempting full capacity. A failure will most likely occur when run full before it has "polished up". It is recommended that several hundred bushels of grain be augered at partial capacity.

Never operate the auger when empty for any length of time, as excessive wear will result. If at all possible do not stop or start the auger under load, especially before the flight and tube become well polished, as this may cause the auger to "freeze-up".

**During the initial start-up and break-in period, the operator shall note any unusual vibrations or noises. Keep all safety shields and devices in place. Keep hands, feet and clothing away from moving parts.**

Proper auger flight speed is important for efficient operation of the equipment.

1. If the flight speed is in excess of what is recommended, excessive wear will result.

2. If the flight speed is slow and the auger flighting is permitted to "load up", high torque will be required to turn the auger flighting and damage to the auger can result. Control the amount of grain fed into the auger. An optional control gate is available for this purpose.

## OPERATING CAPACITIES

The results or capacities of screw conveyors or augers can vary greatly under varying conditions. Different materials, moisture content, amount of foreign matter, methods of feeding and speed all play a role in the performance of the auger. Twenty-five (25%) moisture could cut capacity back by as much as 40% under some conditions.

# OPERATING INSTRUCTIONS - CONT.

## FULL LOAD OPERATION

**Observe work area restrictions.**
**Make certain everyone is clear before operating equipment.**

**TO START AUGER**
1. Start electric motor before conveying grain.

**TO STOP AUGER**
1. Allow the auger to empty before stopping.
2. Shut off electric motor and lockout.

## SHUTDOWN

**A. NORMAL SHUTDOWN**
Permit the auger to clean out before stopping the unit. Before the operator leaves the work area, the power source shall be locked out.

**B. EMERGENCY SHUTDOWN**
Should the auger be immediately shutdown under load - disconnect and lockout the power source.

**NOTE: Starting the unit under load may result in damage to the auger. Such damage is considered abuse of the equipment.**

Reconnect power source and clear auger gradually.

**Whenever you must service or adjust your equipment, make sure to stop motor and lockout your power source!**

## LOCKOUT

If the operator must leave the work area, or whenever servicing or adjusting, the auger must be stopped and the power source turned off. Precaution should be made to prevent anyone from operating the auger when the operator is absent from the work area.

**IMPORTANT: Use a main power disconnect switch capable of being locked only in the off position.**

## CLEAN-UP

1. Check to see that all guards listed in the assembly instructions are in place and secured and functional.

2. Check all safety signs and replace any that are worn, missing or illegible. The safety signs are listed in the parts section of this manual. Safety signs may be obtained from your dealer or ordered from the factory.

3. Are all fasteners tight?

# OPERATING INSTRUCTIONS - CONT.

## TROUBLE SHOOTING

### AUGER VIBRATION

Driving belt may be over tightened, putting head stub and flight in a bind. Damage can occur to the auger flighting, thus causing noise. Damage usually occurs because of foreign material having been run through the auger. It may be necessary to remove the flighting for inspection.

### LOW CAPACITY

The auger may not be getting enough grain. Check to make sure the intake has not bridged over, restricting flow. The exposed flighting at the auger intake should be covered with grain to achieve maximum capacity.

Check auger speed. Speeds slower than the recommended speed will result in low capacity.

### AUGER PLUGS

The auger may be getting too much grain, causing "jamming" inside the housing.

The motor may be too small or wired improperly. (See HP requirements, page 4.)

If wet grain or other hard-to-move material is being augered, use a larger size motor than recommended for normal use. (See footnote to HP chart, page 4.)

Is the auger free of any foreign material, such as sacks, tarp corners, etc? A plug of the discharge end will cause an auger plug.

# ASSEMBLY INSTRUCTIONS

## (3 TO 1 REDUCER DRIVE)

NOTE: The chain reducer is shipped **without oil**.
**IMPORTANT:** Oil must be added during assembly. Remove vented plug and pour in 64 oz. of oil. Replace vented plug. Oil level can be checked by removing check plug. See Fig. 12. Oil should come to the bottom of opening. **DO NOT** add more oil than recommended. Additional oil may damage the seals or be forced out through the vented plug.

**OIL - IMPORTANT:**
For lubrication in normal operating temperature between 40°F to 120°F, we recommend the use of non-foaming, multi-purpose gear oil, SAE 90 weight. For temperatures below 40°F, use SAE 80 weight oil. Use grade commercially available for automotive differentials. Extra pressure additives may be of value in severe applications.

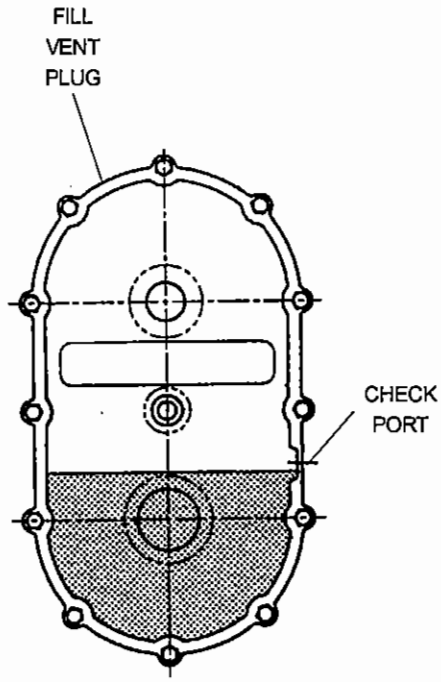


**FIG. 12**
**CHAIN REDUCER OIL LEVEL**

1. Mount head plate (1) to angle ring flange at discharge end of the u-trough auger housing, using eight 3/8" x 1" long hex head bolts and locknuts.

2. Secure 3:1 chain reducer (8) to ring of head plate (1) using, four 3/8" x 1" long hex head bolts and locknuts.

3. Fasten output shaft of chain reducer (8) to flight using, two 1/2" x 3 1/2" long grade 5 bolts and locknuts.

4. Fasten motor mount support (2) and belt guard brackets (6) to the head plate (1) with four 1/2" x 1 1/4" hex head bolts, lockwashers and non-locknuts.

   NOTE: Guard brackets (6) go on outside of motor mount support (2). Also, make certain that the motor mount support (2) is arranged so that the pivot shaft holes are on the right hand side, as seen when looking from the intake end of the auger toward the discharge end. In addition, make sure the back pair of holes in each side of the support (2) are used to mount to the head plate (1).

5. Thread the adjusting rod (5) down through the nut in the top of the motor mount support (2) until it only extends two to three inches above the top of the support (final adjustment will be done after installing motor and belts).

6. Set the motor mount plate (3) down over the motor mount support (2) and align the pivot shaft holes in each. Install the pivot shaft (4) through the holes and install a 3/16" x 1 1/2" cotter pin in each end to secure it in place.

7. Install belt guard (9) and secure to brackets (6) with four 5/16" x 1" long hex head bolts with flat washers, lock washers and nuts. Use the bottom slot of each pair in the guard.

8. Install the driven sheave (10) on the reducer input shaft (8) with a key.

   NOTE: The drives are designed for using a 12" O.D. driven sheave.

# ASSEMBLY INSTRUCTIONS

## (3 to 1 REDUCER DRIVE) - CONT.

9. Install electric motor and mount pulley on motor. (Not furnished.) See motor mount hole locations on page 11.

   **IMPORTANT: Use the proper size and speed motor to ensure satisfactory conveyor operation. Too small of a motor will not supply the horsepower required to achieve capacity and possible damage to the motor will occur. Too large of a motor may cause high stress on conveyor components resulting in shorter life for those components. Align by using straight edge, placed across the outer faces of both pulleys.**

10. Install belts (11) and tighten belts by adjusting the threaded rod (5) up against the bottom of the motor mount plate (3). Once belts are tensioned properly, install a 3/4" nut onto the threaded rod (5) and secure it tightly against the bottom of the motor mount support (2).

    **DO NOT** over tighten driving belt, as this puts unnecessary load on the chain reducer input shaft bearings. It will be necessary to check the belt tension as part of the drives periodic maintenance.

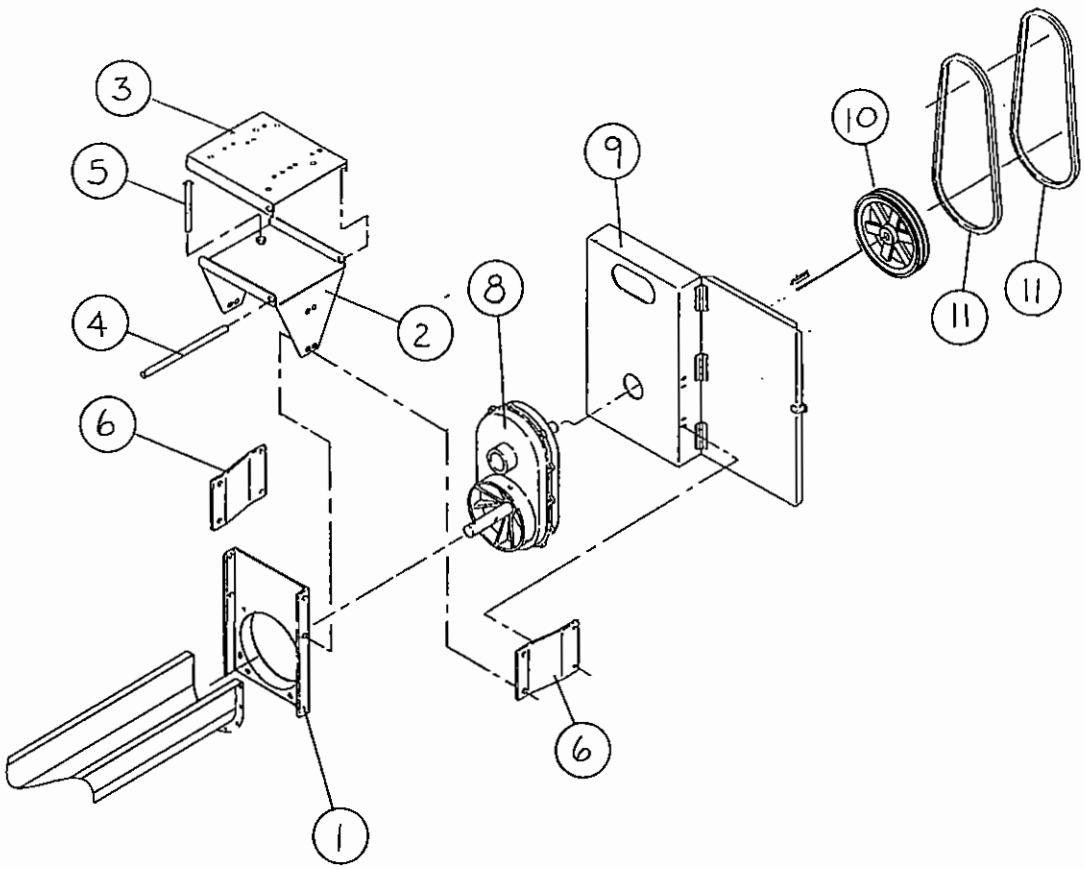

# ASSEMBLY INTRUCTIONS - CONT.

## (3:1 REDUCER DRIVE)

### MOTOR MOUNT HOLE LOCATION

| MOTOR SIZE HP | MOTOR FRAME SIZE | BOLT DIA. REQ'D. | MOUNT IN HOLES MARKED (*) | | | | | | | | | | | | | |
|---|---|---|---|---|---|---|---|---|---|---|---|---|---|---|---|---|
| | | | A1 | A2 | A3 | A4 | A5 | A6 | A7 | A8 | A9 | A10 | B1 | B2 | B3 | B4 |
| 3 | 182T | 3/8" | * | * | * | * | | | | | | | | | | |
| 5 | 184T | 3/8" | * | * | * | * | | | | | | | | | | |
| 7 1/2 | 213T | 3/8" | | | | | * | * | * | * | | | | | | |
| 10 | 215T | 3/8" | | | | | * | * | | | * | * | | | | |
| 15 | 254T | 1/2" | | | | | | | | | | | * | * | * | * |

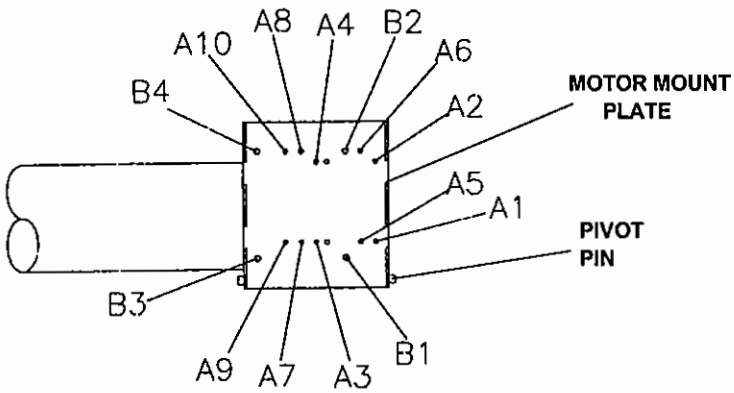


**PARTIAL TOP VIEW**

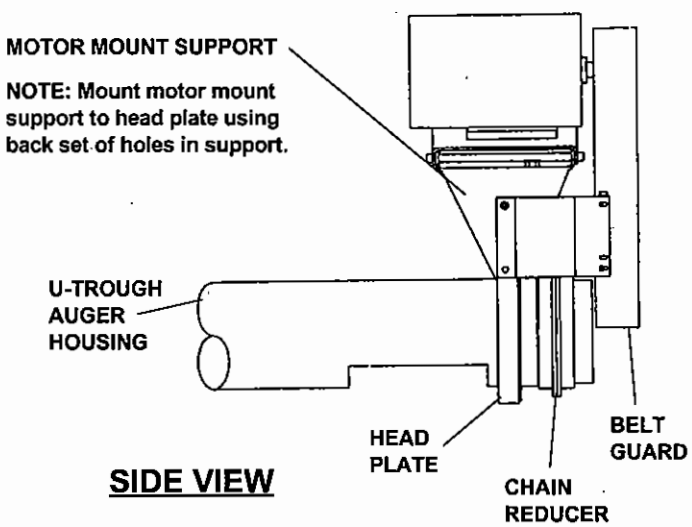


**SIDE VIEW**

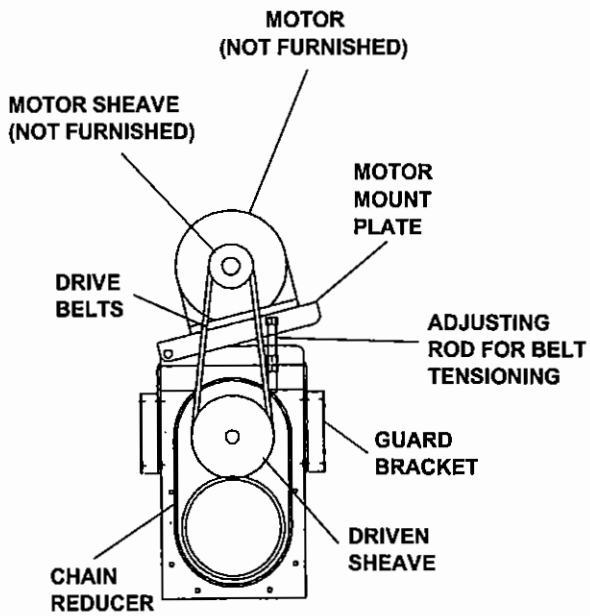


**END VIEW**

BELT GUARD NOT SHOWN IN THIS VIEW FOR CLARITY

# ASSEMBLY INSTRUCTIONS

## (4:1 REDUCER DRIVE)

See assembly drawing on next page.

IMPORTANT: Reducers are shipped WITHOUT oil. ADD 32 ounces before operation. Use EP-90 lube. Oil level should be just below the larger (output shaft).

1. Fasten head plate (1) to the angle flange ring on end of the auger housing, using eleven 3/8" x 1" long hex head bolts, lockwashers and nuts.

2. Fasten belt guard brackets (6 & 7) to reducer (8) and reducer to head plate (1) with four 1/2" x 5" long hex head capscrews and lockwashers.

3. Slide end of flight shaft over output shaft of reducer (8) and secure with two 1/2" x 3 1/2" long hex head capscrews and locknuts.

4. Fasten motor mount support (2) to the head plate (1) with four 1/2" x 1-1/4" hex head bolts, lockwashers and nuts.

   NOTE: Make certain that the motor mount support (2) is arranged so that the pivot shaft holes are on the right hand side, as seen when looking from the intake end of the auger toward the discharge end. In addition, make sure the front set of holes in each side of the support (2) are used to mount to the head plate (1).

5. Thread the adjusting rod (5) down through the nut in the top of the motor mount support (2) until it only extends two to three inches above the top of the support (final adjustment will be done after installing motor and belts).

6. Set the motor mount plate (3) down over the motor mount support (2) and align the pivot shaft holes in each. Install the pivot shaft (4) through the holes and install a 3/16" x 1 1/2" cotter pin in each end to secure it in place.

7. Mount belt guard (9) between brackets (6 & 7) using four 5/16" x 1" long hex head capscrews, flat washers, lockwashers and nuts.

8. Install the driven sheave (10) to reducer input shaft (8) using the QD type hub (11) with key.

   NOTE: The drives are designed for using a either a 7.4", 9.4", 12.4", or 15.4" pitch diameter sheave.

# ASSEMBLY INSTRUCTIONS

## (4:1 REDUCER DRIVE) - CONT.

9. Install electric motor and mount pulley on motor. (Not furnished.) See motor mount hole locations on page 15.

   **IMPORTANT: Use the proper size and speed motor to ensure satisfactory conveyor operation. Too small of a motor will not supply the horsepower required to achieve capacity and possible damage to the motor will occur. Too large of a motor may cause high stress on conveyor components resulting in shorter life for those components. Align by using straight edge, placed across the outer faces of both pulleys.**

10. Install belts (12) and tighten belts by adjusting the threaded rod (5) up against the bottom of the motor mount plate (3). Once belts are tensioned properly, install a 3/4" nut onto the threaded rod (5) and secure it tightly against the bottom of the motor mount support (2).

    **DO NOT** over tighten driving belt, as this puts unnecessary load on the bearing. It will be necessary to check the belt tension as part of the drives periodic maintenance.

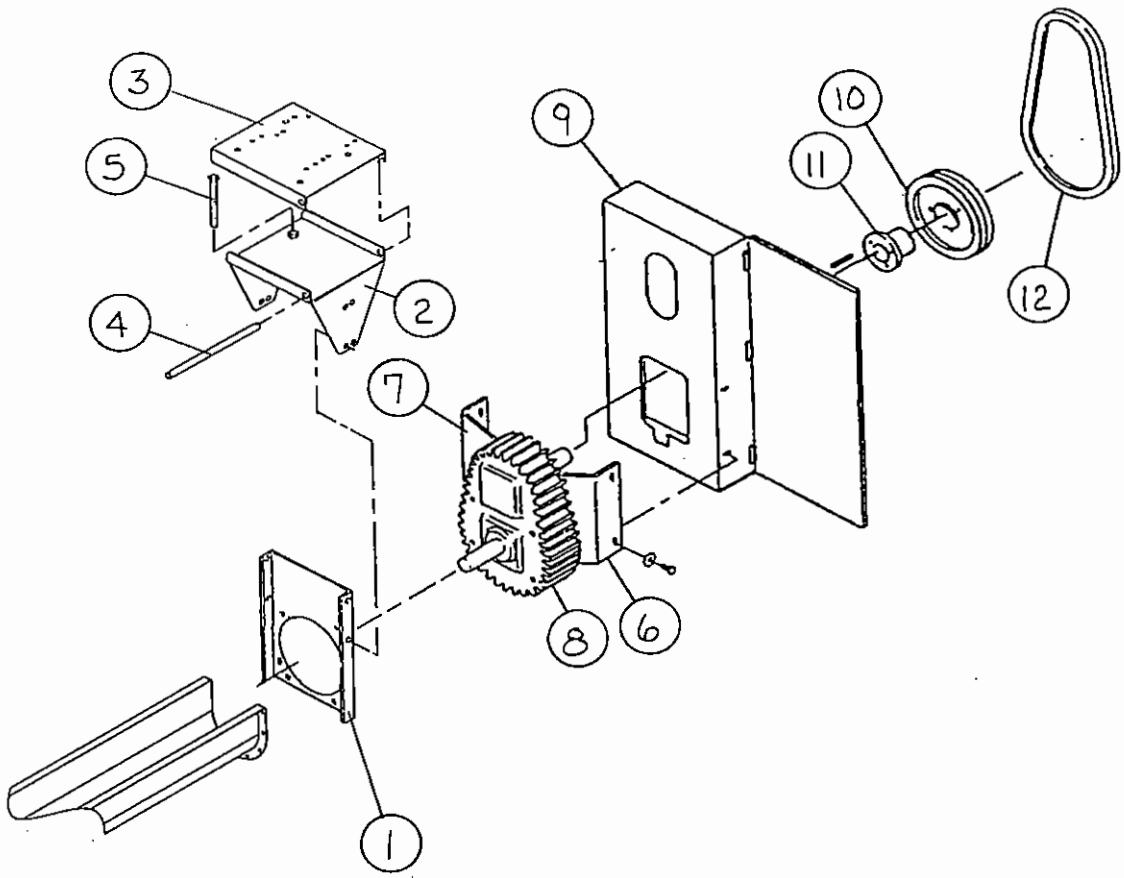

# ASSEMBLY INTRUCTIONS - CONT.

## (4:1 REDUCER DRIVE)

### MOTOR MOUNT HOLE LOCATION

| MOTOR SIZE HP | MOTOR FRAME SIZE | BOLT DIA. REQ'D. | MOUNT IN HOLES MARKED (*) | | | | | | | | | |
|---|---|---|---|---|---|---|---|---|---|---|---|---|
| | | | B1 | B2 | B3 | B4 | B5 | B6 | B7 | B8 | B9 | B10 |
| 15 | 254T | 1/2" | * | * | * | * | | | | | | |
| 20 | 256T | 1/2" | | | | | * | * | * | * | | |
| 25 | 284T | 1/2" | | | | | | * | | * | * | * |

**TOP VIEW**

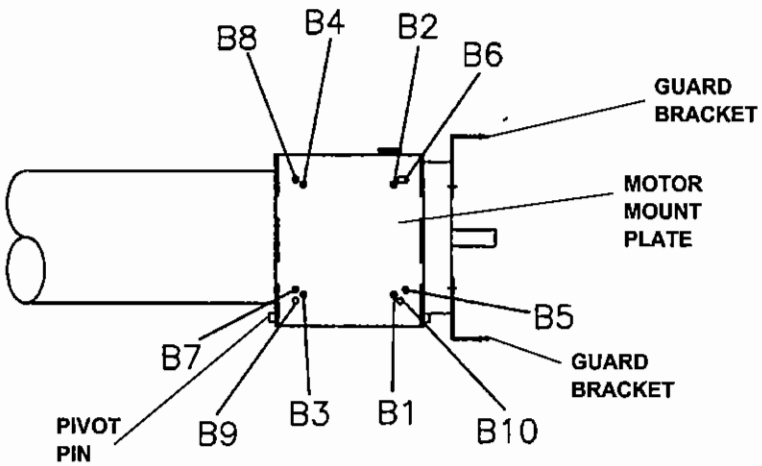


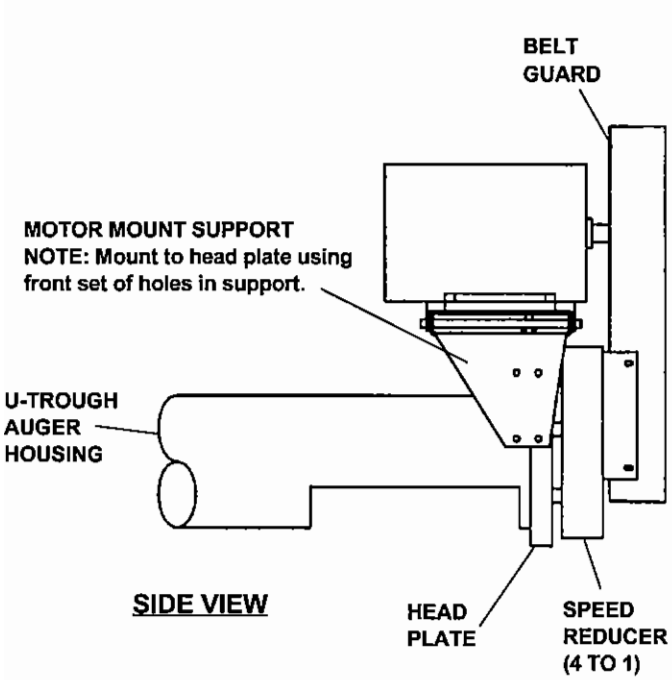


**SIDE VIEW**

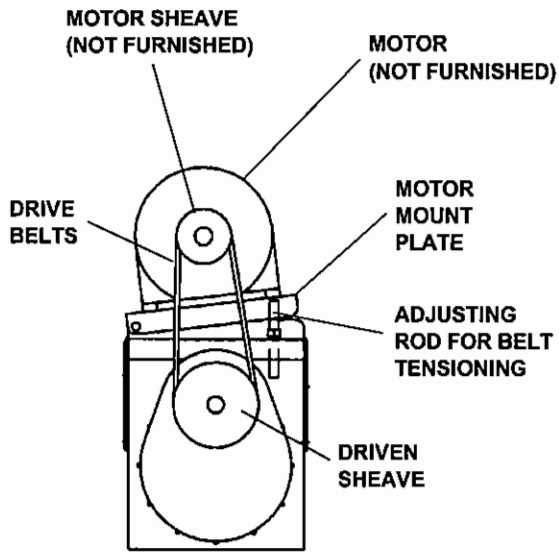


**END VIEW**

BELT GUARD NOT SHOWN IN THIS VIEW FOR CLARITY

# PARTS LIST

## SAFETY DECALS

Check components as specified below to insure that safety decals are present and in good condition. If a decal cannot be easily read for any reason or has been painted over, replace it immediately. Decals may be ordered through your dealer.

**"DANGER" Decal**
**Part No. 1002302**

**"CAUTION" Decal**
**Part No. 1002301**

## SERIAL NUMBER

To insure efficient and prompt service, please furnish us with the model and serial number of your auger in all correspondence or other contacts. The serial plate is located on the motor mount frame.

# PARTS LIST

## 3:1 REDUCER DRIVE

| REF. NO. | PART NO. | DESCRIPTION |
|---|---|---|
| 1 | 1026275 | Head Plate |
| 2 | 1022987 | Motor Mount Support |
| 3 | 1022136 | Motor Mount Plate |
| 4 | 1018789 | Pivot Pin |
| 5 | 1022381 | Adjusting Rod |
| 6 | 1026507 | Belt Guard Bracket |
| 8 | 1011904 | Enclosed Chain Drive, 3:1 Reduction |
| 9 | 1009101 | Belt Guard |
| 10 | See Table 1, Page P-4 | |
| 11 | See Table 1, Page P-4 | |

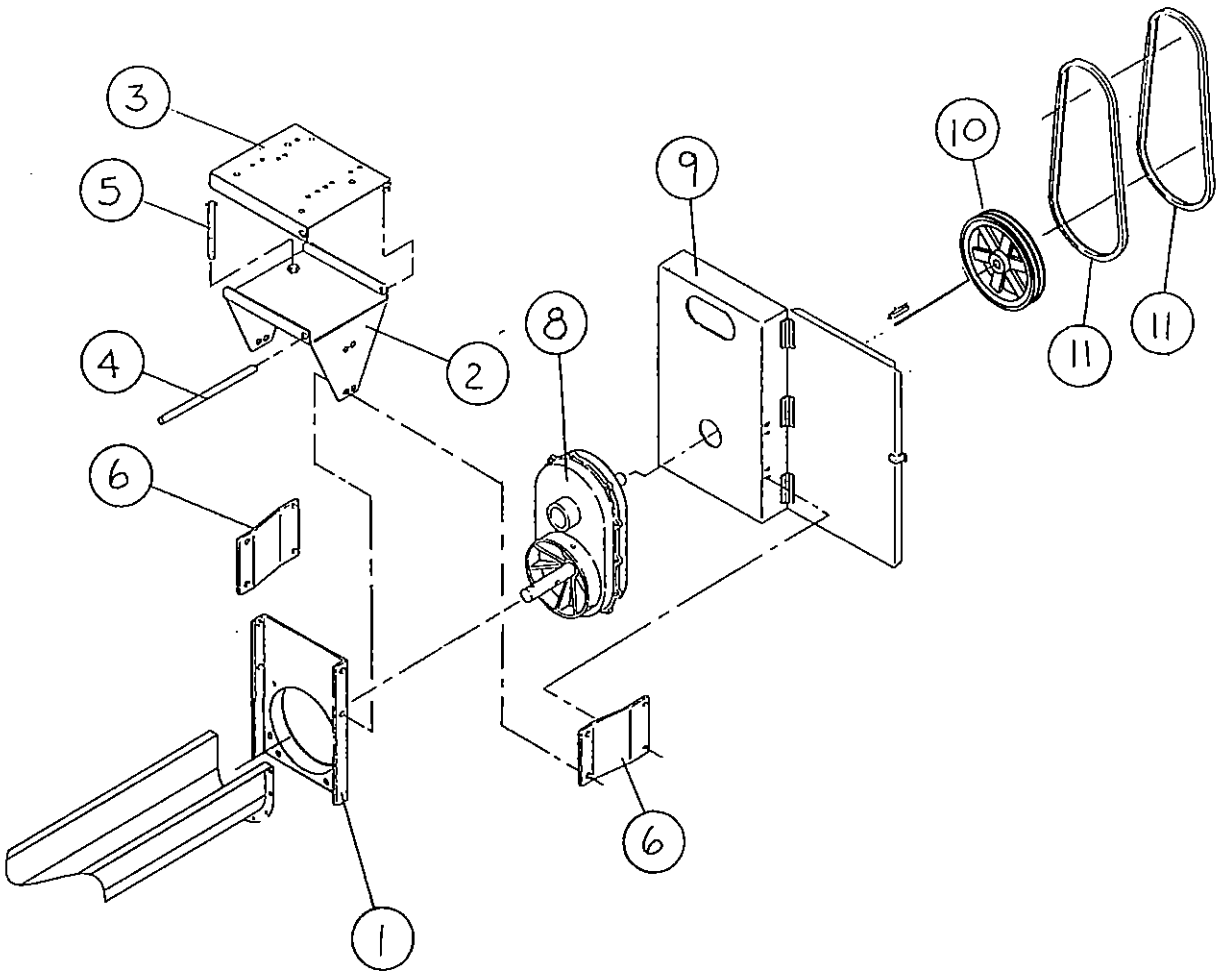

# PARTS LIST

## 4:1 REDUCER DRIVE

| REF. NO. | PART NO. | DESCRIPTION |
|---|---|---|
| 1 | 1026384 | Head Plate |
| 2 | 1022143 | Motor Mount Support |
| 3 | 1022136 | Motor Mount Plate |
| 3 | 1022137 | Motor Mount Plate |
| 4 | 1018789 | Pivot Pin |
| 5 | 1022381 | Adjusting Rod |
| 6 | 1014407 | Belt Guard Bracket |
| 7 | 1014406 | Belt Guard Bracket |
| 8 | 1025519 | Enclosed Gear Drive, 4:1 Reduction |
| 9 | 1002042 | Belt Guard |
| 10 | See Table 2, Page P-4 | |
| 11 | See Table 2, Page P-4 | |
| 12 | See Table 2, Page P-4 | |

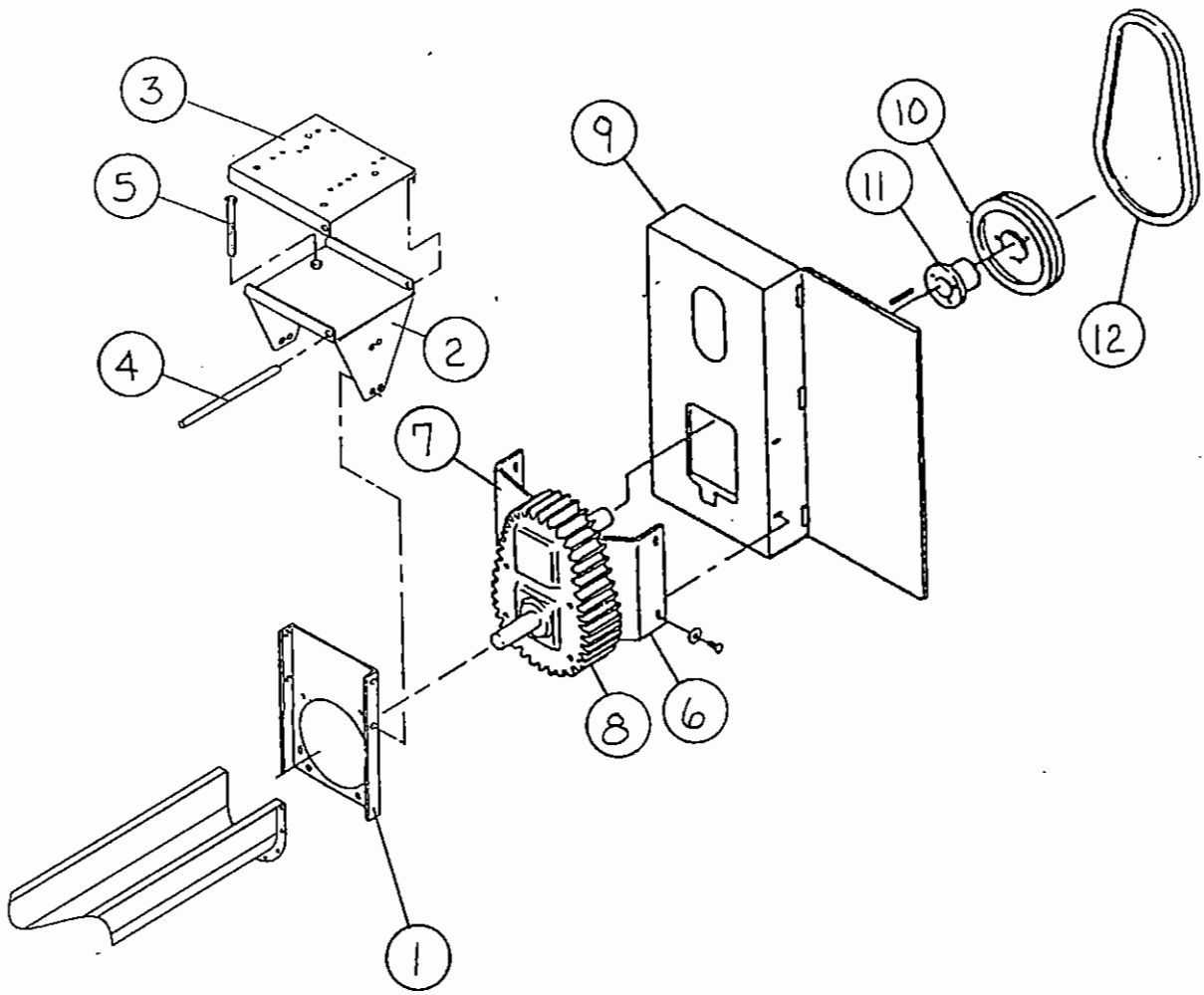

# PARTS LIST
## (BELT & SHEAVE COMPONENTS)

### TABLE 1

| | | | Reference Number | | 10 | | 11 | |
|---|---|---|---|---|---|---|---|---|
| Drive Type | Motor HP | No. of Belts | P.D. Driver | P.D. Driven | Part No. Driven Sheave | Flight RPM | Belt Part No. | Belt Length |
| 4:1 Reducer Drive | 3-5 | 2 | 3.4" | 11.7" | 40152 | 180 | 40119 | B-54 |
| | 7 1/2 | 3 | 3.4" | 11.7" | 40154 | 180 | 40119 | B-54 |
| | 3-5 | 2 | 4.2" | 11.7" | 40152 | 220 | 40119 | B-54 |
| | 7 1/2 | 3 | 4.2" | 11.7" | 40154 | 220 | 40119 | B-54 |
| | 10 | 3 | 4.2" | 11.7" | 40154 | 220 | 40119 | B-54 |
| | 3-5 | 1 | 5" | 11.7" | 40150 | 260 | 40119 | B-54 |
| | 7 1/2 | 2 | 5" | 11.7" | 40152 | 260 | 40120 | B-57 |
| | 10 | 2 | 5" | 11.7" | 40152 | 260 | 40120 | B-57 |
| | 3-5 | 1 | 5.6" | 11.7" | 40150 | 290 | 40120 | B-57 |
| | 7 1/2 | 1 | 5.6" | 11.7" | 40150 | 290 | 40120 | B-57 |
| | 10 | 2 | 5.6" | 11.7" | 40152 | 290 | 40120 | B-57 |
| | 3-5 | 1 | 6.2" | 11.7" | 40150 | 316 | 40120 | B-57 |
| | 7 1/2 | 1 | 6.2" | 11.7" | 40150 | 316 | 40120 | B-57 |
| | 10 | 2 | 6.2" | 11.7" | 40152 | 316 | 40120 | B-57 |

### TABLE 2

| | | | Reference Number | | 10 | 11 | | 12 | |
|---|---|---|---|---|---|---|---|---|---|
| Drive Type | Motor HP | No. of Belts | P.D. Driver | P.D. Driven | Part No. Driven Sheave | Part No. Driven Sheave Bushing | Flight RPM | Belt Part No. | Belt Length |
| 4:1 Reducer Drive | 5 | 2 | 4.2" | 15.4" | 40646 | 3295A1 | 125 | 40121 | B-60 |
| | 7 1/2 | 2 | 4.2" | 15.4" | 40646 | 3295A1 | 125 | 40122 | B-62 |
| | 10 | 3 | 4.2" | 15.4" | 40652 | 3295A1 | 125 | 40122 | B-62 |
| | 15 | 4 | 4.2" | 15.4" | 3092A1 | 3073A1 | 125 | 40122 | B-62 |
| | 5 | 2 | 4.2" | 12.4" | 3237A1 | 3295A1 | 155 | 40119 | B-54 |
| | 7 1/2 | 2 | 4.2" | 12.4" | 3237A1 | 3295A1 | 155 | 40119 | B-54 |
| | 10 | 3 | 4.2" | 12.4" | 3246A1 | 3295A1 | 155 | 40119 | B-54 |
| | 15 | 4 | 4.2" | 12.4" | 3091A1 | 3295A1 | 155 | 40119 | B-57 |
| | 5 | 1 | 5" | 12.4" | 3306A1 | 1002107 | 180 | 40120 | B-57 |
| | 7 1/2 | 2 | 5" | 12.4" | 3237A1 | 3295A1 | 180 | 40120 | B-57 |
| | 10 | 2 | 5" | 12.4" | 3237A1 | 3295A1 | 180 | 40120 | B-57 |
| | 15 | 3 | 5" | 12.4" | 3246A1 | 3295A1 | 180 | 1023004 | B-59 |
| | 5 | 1 | 6" | 12.4" | 3306A1 | 1002107 | 220 | 40120 | B-57 |
| | 7 1/2 | 1 | 6" | 12.4" | 3306A1 | 1002107 | 220 | 40120 | B-57 |
| | 10 | 2 | 6" | 12.4" | 3237A1 | 3295A1 | 220 | 40120 | B-57 |
| | 15 | 2 | 6" | 12.4" | 3237A1 | 3295A1 | 220 | 1023004 | B-59 |
| | 20 | 3 | 6" | 12.4" | 3246A1 | 3295A1 | 220 | 1023004 | B-59 |
| | 25 | 3 | 6" | 12.4" | 3246A1 | 3295A1 | 220 | 40121 | B-60 |
| | 5 | 1 | 5.4" | 9.4" | 3074A1 | 1002107 | 260 | 611039 | B-51 |
| | 7 1/2 | 1 | 5.4" | 9.4" | 3074A1 | 1002107 | 260 | 611039 | B-51 |
| | 10 | 2 | 5.4" | 9.4" | 3075A1 | 3295A1 | 260 | 611039 | B-51 |
| | 15 | 2 | 5.4" | 9.4" | 3075A1 | 3295A1 | 260 | 40119 | B-54 |
| | 20 | 3 | 5.4" | 9.4" | 3080A1 | 3295A1 | 260 | 40119 | B-54 |
| | 25 | 4 | 5.4" | 9.4" | 3093A1 | 3295A1 | 260 | 40119 | B-54 |
| | 5 | 1 | 5.4" | 7.4" | 3255A1 | 1002107 | 325 | 40115 | B-46 |
| | 7 1/2 | 1 | 5.4" | 7.4" | 3255A1 | 1002107 | 325 | 40116 | B-48 |
| | 10 | 2 | 5.4" | 7.4" | 3235A1 | 3295A1 | 325 | 40116 | B-48 |
| | 15 | 2 | 5.4" | 7.4" | 3235A1 | 3295A1 | 325 | 40117 | B-50 |
| | 20 | 3 | 5.4" | 7.4" | 3244A1 | 3295A1 | 325 | 40117 | B-50 |
| | 25 | 4 | 5.4" | 7.4" | 3250A1 | 3295A1 | 325 | 611039 | B-51 |

# PARTS LIST

## ENCLOSED DRIVE - RATIO 3 TO 1 FOR 12" CUSTOM AUGER

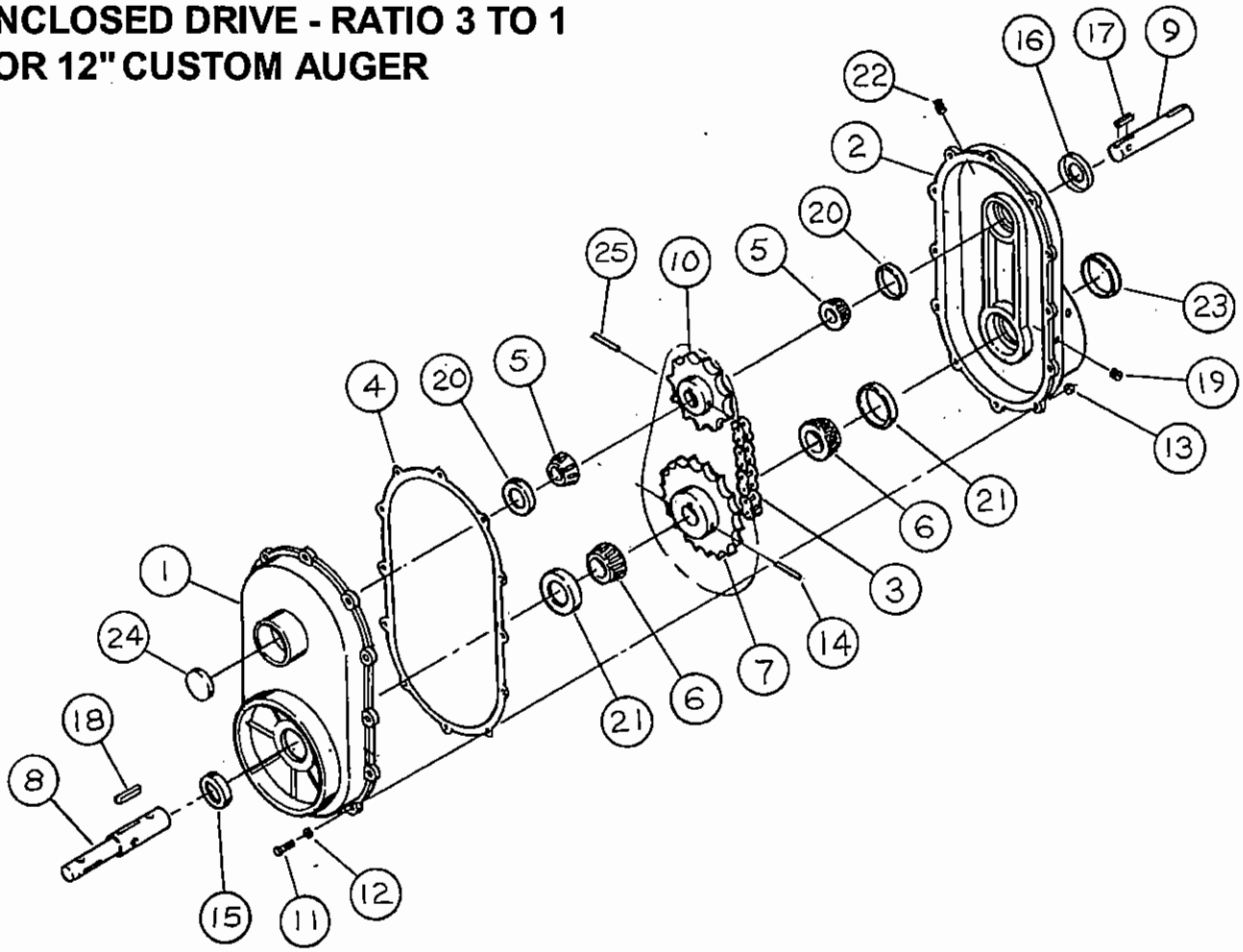


**COMPLETE ASSEMBLY NO. 1011904**

| REF. NO. | PART NO. | DESCRIPTION |
|---|---|---|
| 1 | 1001523 | Aluminum Casting (inside) |
| 2 | 1003044 | Aluminum Casting (outside) |
| 3 | 1001847 | #80 Roller Chain - 36 Pitch (includes connecting link) |
| 4 | 1001573 | Gasket |
| 5 | 106322 | 1 1/4" Bearing Cone (Timken No. 15123) |
| 6 | 035439 | 1 1/2" Bearing Cone (Timken No. LM29749) |
| 7 | 1001841 | 1 1/2" Bore Sprocket - 27 tooth |
| 8 | 1011905 | Stub Output Shaft - 2" |
| 9 | 1001850 | Stub Input Shaft - 1 1/4" |
| 10 | 1001840 | 1 1/4" Bore Sprocket - 9 tooth |
| 11 | 4727-1 | 5/16" x 1 1/4" HHCS |
| 12 | 33144 | 5/16" Lockwasher |
| 13 | 33151 | 5/16" Lock Nut |
| 14 | 33190 | 5/16" x 2 1/2" Roll Pin |
| 15 | 035860 | Output Shaft Seal - 1 1/2" |
| 16 | 835168 | Input Shaft Seal - 1 1/4" |
| 17 | 4020A1 | Square Key 1/4" x 1" |
| 18 | 1002276 | Square Key 3/8" x 1" |
| 19 | 458026 | Drain Plug - 3/8" |
| 20 | 106323 | 1 1/4" Bearing Cup (Timken No. 15245) |
| 21 | 035440 | 1 1/2" Bearing Cup (Timken No. LM29710) |
| 22 | 1001438 | 3/8" Pipe (vented plug) |
| 23 | 1001851 | Cap |
| 24 | 1001852 | Cap |
| 25 | 33193 | 5/16" x 2" Roll Pin |
| 26* | 1002275 | Decal, "Fill with oil" |

*Not shown

# PARTS LIST

## 4:1 REDUCER

**PART NO. 1025519**

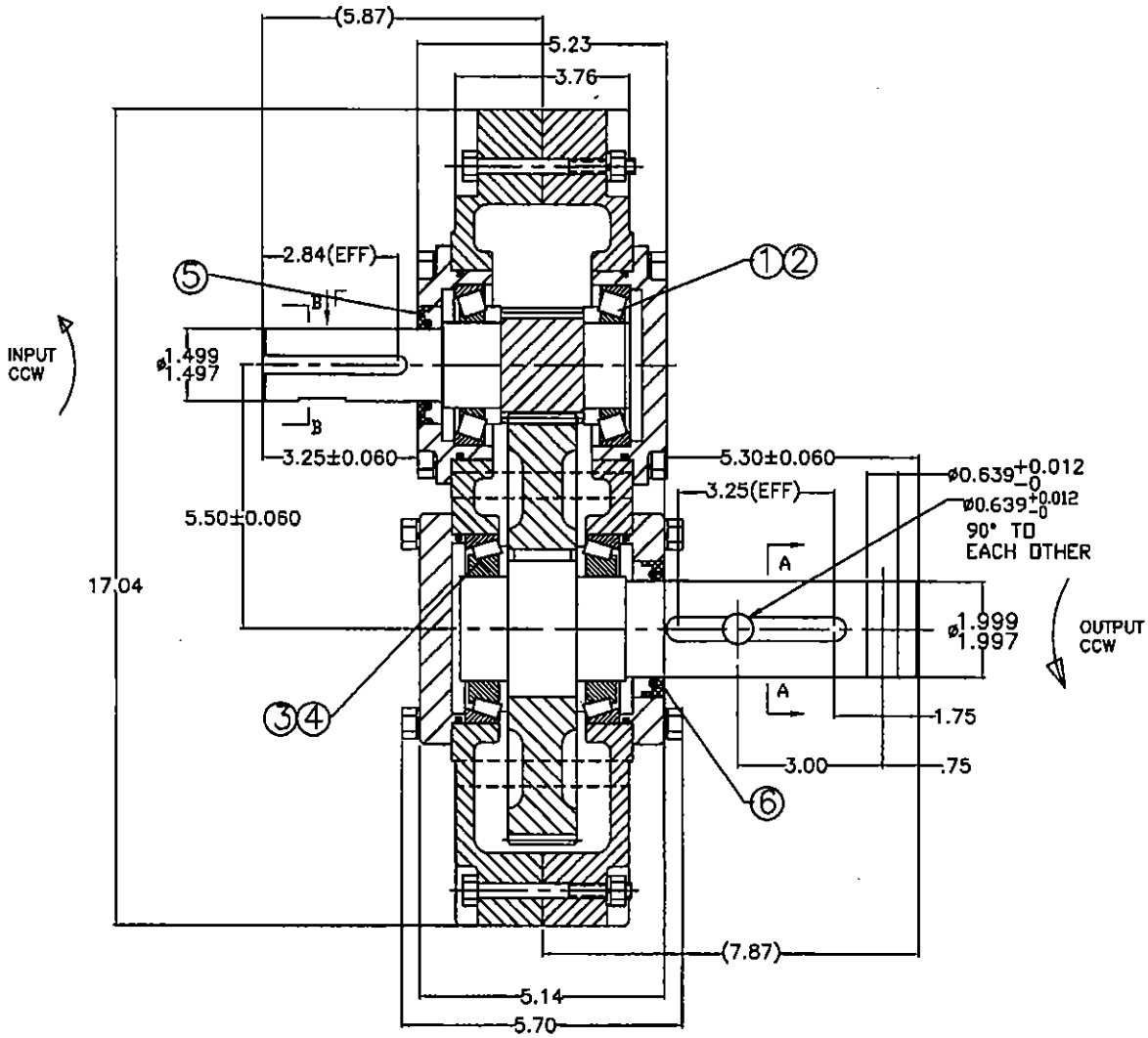


| REF. NO. | PART NO. | DESCRIPTION |
|---|---|---|
| 1 | 1026473 | Bearing Cone 25590 |
| 2 | 1021344 | Bearing Cup 25520 |
| 3 | 1026474 | Bearing Cone 390A |
| 4 | 1026475 | Bearing Cup 394A |
| 5 | 1026476 | Seal f/1.50" Input Shaft |
| 6 | 1026477 | Seal f/2.00" Output Shaft |

**Hutchinson/Mayrath/TerraTrack**

*A Division of **GLOBAL** Industries, Inc.*

P.O. Box 629 514 W. Crawford Clay Center, KS 67432
Phone 785-632-2161 1-800-523-6993 FAX 785-632-5964