8" CENTURY II AUGER
8" TD-PLUS AUGER

OWNER'S & OPERATOR'S MANUAL

Effective July 11, 2003

Publication No. 1025715

Hutchinson/Mayrath/TerraTrack

*A Division of **GLOBAL** Industries, Inc.*

P.O. Box 629 • 514 W. Crawford • Clay Center, KS 67432
Phone 785-632-2161 • 1-800-523-6993 • FAX 785-632-5964

Hutchinson/Mayrath/TerraTrack

*A Division of **GLOBAL** Industries, Inc.*

POLICIES AND PROCEDURES

PRICES: Prices in effect at time of shipment will apply. Prices are subject to change without notice. All prices are F.O.B. Clay Center, Kansas. Orders shipped from locations other than Clay Center, Kansas will be subject to additional charges, such as back freight and/or additional freight.

SERVICE CHARGE: A service charge will be assessed on all past due balances as permitted by state law not to exceed 1-1/2% per month.

MIINMUM ORDER: Processing and handling costs necessitate a minimum charge of $15.00 net on all orders.

BACK ORDERS: Back orders will be shipped as they become available. Contact Hutchinson/Mayrath/TerraTrack Customer Service for alternative shipping options or if cancellation is desired.

DAMAGED GOODS: It is the consignee's responsibility to check all shipments thoroughly upon receipt of goods. If any damage is discovered, it must be noted on the freight bill of lading before signing. The consignee must make necessary claims against the respective freight line. All damage claims must be submitted within 30 days of delivery receipt.

SHORTAGES: All shortages must be noted at time of delivery receipt. Shortages must be noted on the freight bill of lading before signing. Hutchinson/Mayrath/TerraTrack must be advised of all concealed shortages upon discovery. Once notified of concealed shortages Hutchinson/Mayrath/TerraTrack will advise corrective action to be taken.

RETURN OF GOODS: All returns must be approved by Hutchinson/Mayrath/TerraTrack prior to shipment. All return requests will be issued a return authorization number. NO RETURNS WILL BE ACCEPTED WITHOUT A RETURN AUTHORIZATION NUMBER AND PRIOR AUTHORIZATION FROM THE FACTORY. All returns must be shipped prepaid. A 15% restocking charge will be applied to all returned merchandise. Custom products may not be returned for credit. Only current products in new and saleable condition may be returned. No safety devices may be returned for credit.

MODIFICATIONS: It is the policy of Hutchinson/Mayrath/TerraTrack to improve its product whenever possible and practical to do so. We reserve the right to make changes, improvements and modifications at any time without incurring the obligation to make such changes, improvements and modifications on any equipment sold previously.

LIMITED WARRANTY: (a) For a period of (1) year after receipt of goods by the original consumer buyer, Hutchinson/Mayrath/TerraTrack will supply free of charge replacement parts for parts that prove defective in workmanship or material. Defective parts must be returned freights prepaid to a specified Hutchinson/Mayrath/TerraTrack location. Only Hutchinson/Mayrath/TerraTrack original repair parts may be used for warranty repairs.
(b) This limited warranty does not extend to parts designed to wear in normal operation and be replaced periodically, or to damage caused by negligence, accident, abuse or improper installation or operation.
(c) GOODS NOT MANUFACTURED BY HUTCHINSON/MAYRATH/TERRATRACK CARRY ONLY THE MANUFACTURER'S WARRANTY.
(d) THIS UNDERTAKING IS IN LIEU OF ALL OTHER WARRANTIES, EXPRESSED OR IMPLIED, INCLUDING MERCHANTABILITY AND FITNESS FOR A PARTICULAR PURPOSE.

FAILURE TO FOLLOW THE INSTRUCTIONS CONTAINED IN THE OWNER'S & OPERATOR'S MANUALS AND THE ITEMS LISTED BELOW WILL RESULT IN THE VOIDING OF THIS LIMITED WARRANTY.

(1) Improper assembly, including failure to properly install all safety equipment.
(2) Improper installation (power & wiring included)
(3) Unauthorized alterations of goods.
(4) Goods operated when obviously in need of repair.
(5) Use of unauthorized repair parts.
(6) Irresponsible operation.
(7) Used to handle materials other than free flowing, non-abrasive and dry materials, as intended.
(8) Damaged through abusive use or accident.

LIMITATION OF LIABILITY: BUYER AGREES THAT IN NO EVENT SHALL HUTCHINSON/MAYRATH/TERRATRACK HAVE LIABILITY FOR DIRECT DAMAGES IN EXCESS OF THE CONTRACT PRICE OF THE GOODS IN RESPECT TO WHICH CLAIM IS MADE. BUYER FURTHER AGREES THAT IN NO EVENT SHALL HUTCHINSON/MAYRATH/TERRATRACK ON ANY CLAIM OF ANY KIND HAVE LIABILITY FOR LOSS OF USE, LOSS OF PROFITS, OR FOR ANY INDIRECT, INCIDENTAL OR CONSEQUENTIAL DAMAGES.

GENERAL SAFETY STATEMENT

This manual was written with the safety of the operator and others who work with the equipment as our prime concern. The instructions presented will help the reader learn SAFE day to day work practices. We want you as our partner in safety.

It is your responsibility as an owner, operator or supervisor to know what specific safety requirements and precautions exist and to make these known to all other personnel working with the equipment or in the area, so that they too may safely perform their duties and avoid any potentially hazardous situations.

Please remember safety equipment provides important protection for persons around a grain handling system that is in operation. Be sure that ALL safety shields and protection devices are installed and properly maintained. If any shields or guards are damaged or missing, contact your dealer to obtain the correct items.

Avoid any alterations of the equipment. Such alterations may create a dangerous situation where serious injury or death may occur.

SAFETY ALERT SYMBOL

The symbol shown below is used to call your attention to instructions concerning your personal safety. Watch this symbol - it points out important safety precautions. It means "ATTENTION! Become alert! Your personal safety is involved!" Read the message that follows and be alert to the possibility of personal injury or death.

BE ALERT! YOUR SAFETY IS INVOLVED.

WARNING

Anyone who will operate or work around this machine shall first read this manual! This manual must be delivered with the equipment to its owner. Failure to read this manual and its safety instructions is a misuse of the equipment.

TABLE OF CONTENTS

General Safety Statements 1
Machine Inspection 2
TRANSPORTING AUGER 3-4
PLACEMENT OF AUGER 4-5
WINCH INSTRUCTIONS 5
DESIGNATED WORK AREA 5-6
OPERATING PROCEDURES 7-11
Start Up & Break In 7
Direct PTO Drive Information 7-8
Top Mounted Electric Motor Drive 8-9
Operating Capacities 9
Shut Down 10
Lockout 10
Relocation of Augers 10-11
TROUBLE SHOOTING 11
LUBRICATION AND MAINTENANCE 12-13
ASSEMBLY INSTRUCTIONS 14-39
PARTS LIST P1-P17

SERIAL NUMBER

To ensure efficient and prompt service, please furnish us with the model and serial number of your auger in all correspondence or other contact. The serial plate is located on the winch mount on the lower section of auger housing.

RIGHT AND LEFT DESIGNATION

When determining which is the left or right hand side of the unit, it is as if a person were standing at the intake end and looking toward the discharge end.

MACHINE INSPECTION

After delivery of your new auger and/or completion of assembly and before each use,, inspection of the machine is mandatory. This inspection should include, but not be limited to:

1. Check to see that all guards listed in the assembly instructions are in place and secured and functional.

2. Check all safety signs and replace any that ware worn, missing or illegible. The safety signs are listed on page P-1 and P-3. Safety signs may be obtained from your Dealer or ordered from the factory.

3. Check winch and cable for security and operation. There should be at least three complete wraps of cable around winch drum full down position. Cable anchor on winch drum must be tight.

4. Are all fasteners tight?

5. Are all belts and chain properly adjusted? (See Maintenance Section.)

6. Check oil levels in gearbox and enclosed drive unit. (See Maintenance Section.)

TRANSPORTING AUGERS

TRANSPORT: Moving the Auger with the Towing Vehicle to or from the Work Area.

1. HITCHING TO TOWING VEHICLE INSTRUCTIONS.

Make certain the hitch pin is securely attached and an alternate hitch safety chain is secured to the auger and towing vehicle. Check to see that the hitch is securely attached.

Never raise the intake end higher than is necessary to attach to a towing vehicle. Weight transfers rapidly to the head end when the intake is raised.

NOTE: Empty machine before moving to prevent upending.

Never stand between tractor and machine when hitching unless all controls are in neutral and the brakes locked.

PORTABLE AUGER IN TRANSPORT POSITION

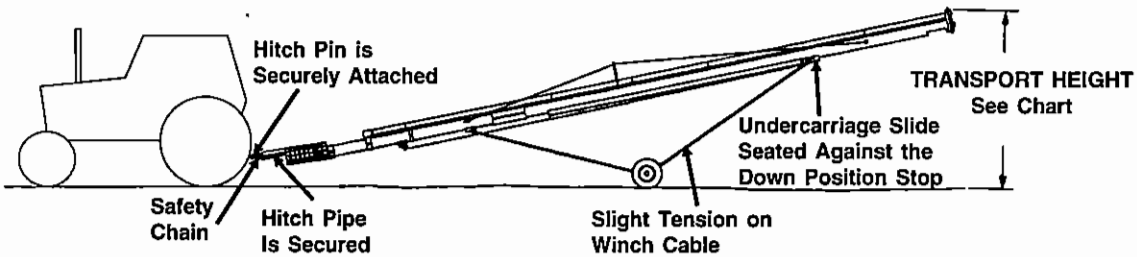

AUGER LENGTH	33'	41'	47'	53'	57'	59'	62'	65'	71'
*TRANSPORT HEIGHT	12'-5"	12'-11"	13'-10"	14'-1"	12'-11"	13'-11"	14'-2"	15'-4"	16'-10"

***IMPORTANT: Transport heights are figured with auger attached to towing vehicle with a drawbar height of 1'-6". When the auger intake is resting on the ground, add 1'-6" to transport height of the auger to achieve the overall auger height.**

ALTERNATE HITCH SAFETY CHAIN INSTALLATION

An auxiliary attachment system (safety chain) is required to retain the connection between towing and towed machines in the event of separation of the primary attachment system.

The safety chain should be routed through the intake chain safety screen and around the bearing support at the lower end of the intake flight. Then route the chain through the chain support on the hitch pipe.

A clevis or intermediate chain support should be fastened to the tractor drawbar no farther than 6" from the hitch pin.

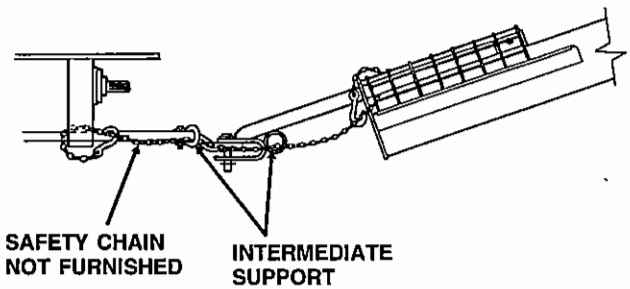

2. MOVING AUGER

Moving your portable auger requires careful planning. A route plan should be considered beforehand to avoid dangerous obstacles and loss of time.

Always transport your auger in the full down position. The lift arm of the undercarriage should be seated against the down position stop with slight tension on the winch cable and at least 3 complete wraps of cable around the winch drum.

Never allow persons to stand underneath or ride on the auger when moving the auger. Make certain everyone is clear of the work area before moving.

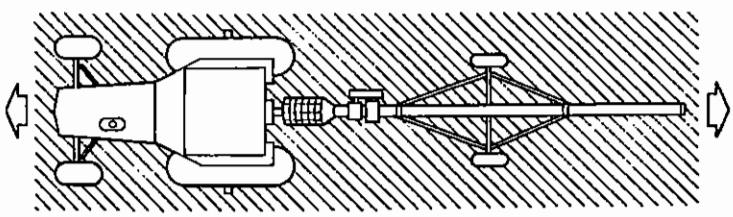

WHEN MOVING AUGER.
HAZARD AREA - KEEP OUT

TRANSPORTING AUGER - CONT.

Comply with your state and local regulations governing marking, towing and maximum width. Observe safe driving and operating practices.

Be alert to overhead obstructions and electrical wires, particularly if towing height is greater than 13'-6". Failure to do so may result in electrocution. Lower auger well below level of power lines before moving. Maintain at least ten (10) feet of clearance. Page 3 contains a chart showing the height of each portable auger in the lowered transport position. Check the chart to determine the height of your auger.

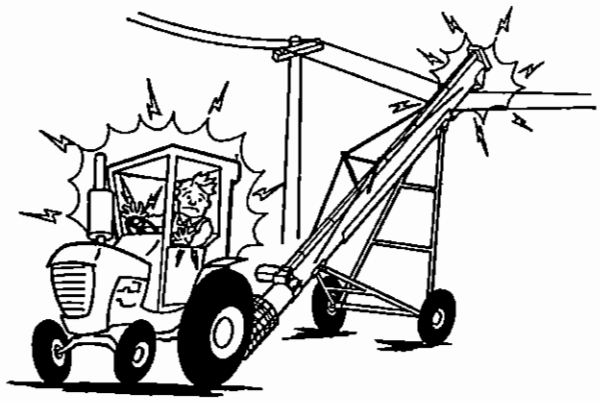

PLACEMENT OF AUGER

STEP 1
Locate auger next to bin.

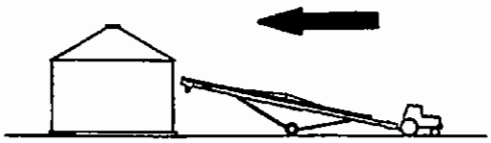

STEP 2
Raise auger.

STEP 3
Back into position.

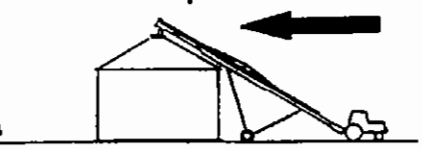

STEP 1

Move the auger slowly towards working position with towing vehicle--not by hand. Locate the auger on level ground as close as possible to the bin or other structure. Leave adequate room for loaded vehicles to reach the auger intake area conveniently. The wheels must be allowed to roll freely when raising, so be sure the area is clear of any obstructions.

Make certain everyone is clear of the work area when moving the auger. To prevent tip-over when backing, avoid rolling over any obstructions, also avoid steep slopes. If the auger must sit on a slope, approach the bin up hill. Avoid moving the auger at right angles to a slope.

Make sure entire area above auger and in line of travel is clear of overhead obstructions and electrical wires. Failure to do so may result in electrocution. Maintain at least ten (10) feet of clearance. Electrocution can occur without direct contact.

STEP 2

Raise the auger only high enough to allow minimum clearance above the bin. See "WINCH INSTRUCTIONS" on page 5 for winch operating procedures. Observe all winch safety precautions.

STEP 3

Back auger slowing into working position with towing vehicle. **NEVER MOVE AUGER BY HAND; USE A VEHICLE. DO NOT ATTEMPT TO INCREASE AUGER HEIGHT BY POSITIONING WHEELS ON LUMBER, BLOCKS OR BY OTHER MEANS.**

Lower the auger until the discharge is directly over bin opening. See "WINCH INSTRUCTIONS" on page 5. Consider that the discharge end will lower a few inches as the auger fills with grain.

NOTE: When discharging into a grain spreader, always maintain at least 12 inches of space between the auger discharge and the spreader.

Once in place, the wheels should be chocked on both sides of auger so it will not roll when disconnected from the towing vehicle.

PLACEMENT OF AUGER - cont.

STEP 3 - cont.
When releasing from the towing vehicle, test the intake end for downward weight. **LOWER IT SLOWLY TO THE GROUND. NOTE: Weight transfers rapidly to the head end if the intake is raised above the tow bar, particularly when the auger is in a raised position.**

Remove bolt from hitch and fully retract hitch pipe. If a hopper is to be used, install at this time.

The auger should be anchored at the intake end and/or supported at the discharge end. This will prevent auger from tipping when weight transfers to top end as auger empties. It is a good practice to tie the discharge end of the auger to the bin or storage structure to prevent possible wind damage. Remember to untie the auger before attempting to move.

HAND WINCH OPERATION (FRICTION TYPE)

Check the handle assembly on the winch to determine that it has been assembled correctly. (See assembly section.) There should be a locknut attached to the end of the winch shaft to prevent inadvertent removal of the winch handle.

Keep hands away from winch drum during operation.

TO RAISE THE AUGER:
Turn the handle clockwise (pulling cable onto winch drum). There should be a clicking sound.
NOTE: The winch is equipped with a brake that is actuated by turning the handle. The brake is designed to hold the load whenever the handle is released.

TO LOWER THE AUGER:
Turn the handle counter-clockwise; there will be no clicking sound. To stop while lowering the auger, lock the brake by turning the handle clockwise until you hear two clicks (about a 6" movement of the handle).

Never fully extend the cable and always keep three complete wraps of cable around winch drum. Never operate winch with wet or oily hands and ALWAYS use a firm grip on the handle.

SAFETY REMINDERS - Be aware of the following precautions during operation.
- **Observe the cable as it is winding onto the winch drum. The cable should roll up on the drum evenly; avoid cable build-up on one side of the drum.**
- **Don't use hands to guide cable onto winch drum during winch operation.**
- **Don't allow auger to become hung up on other structures during lowering.**
- **Don't continue to attempt to raise auger after slide reaches stop.**

See the winch manufacturer's information sheet that was shipped with this manual for additional winch information.

DESIGNATED WORK AREA

Before starting the auger, a designated work area should be established and properly marked. The following diagrams show the manufacturers designated work areas. These areas shall be marked off with colored nylon or plastic rope hung as portable barriers to define the designated work areas.

RULES FOR SAFE WORK AREA

Under no circumstances should persons not involved in the operation be allowed to trespass into the work area.

It shall be the duty of all operators to see that children and/or other persons stay out of the work areas! Trespass into the work area by anyone not involved in the actual operation, or trespass into a hazard area by anyone, shall result in an immediate shutdown by the operator.

It shall be the responsibility of all operators to see that the work area has secure footing, is orderly, clean and free of all tools and debris which might cause accidental tripping and/or falling.

DESIGNATED WORK AREA

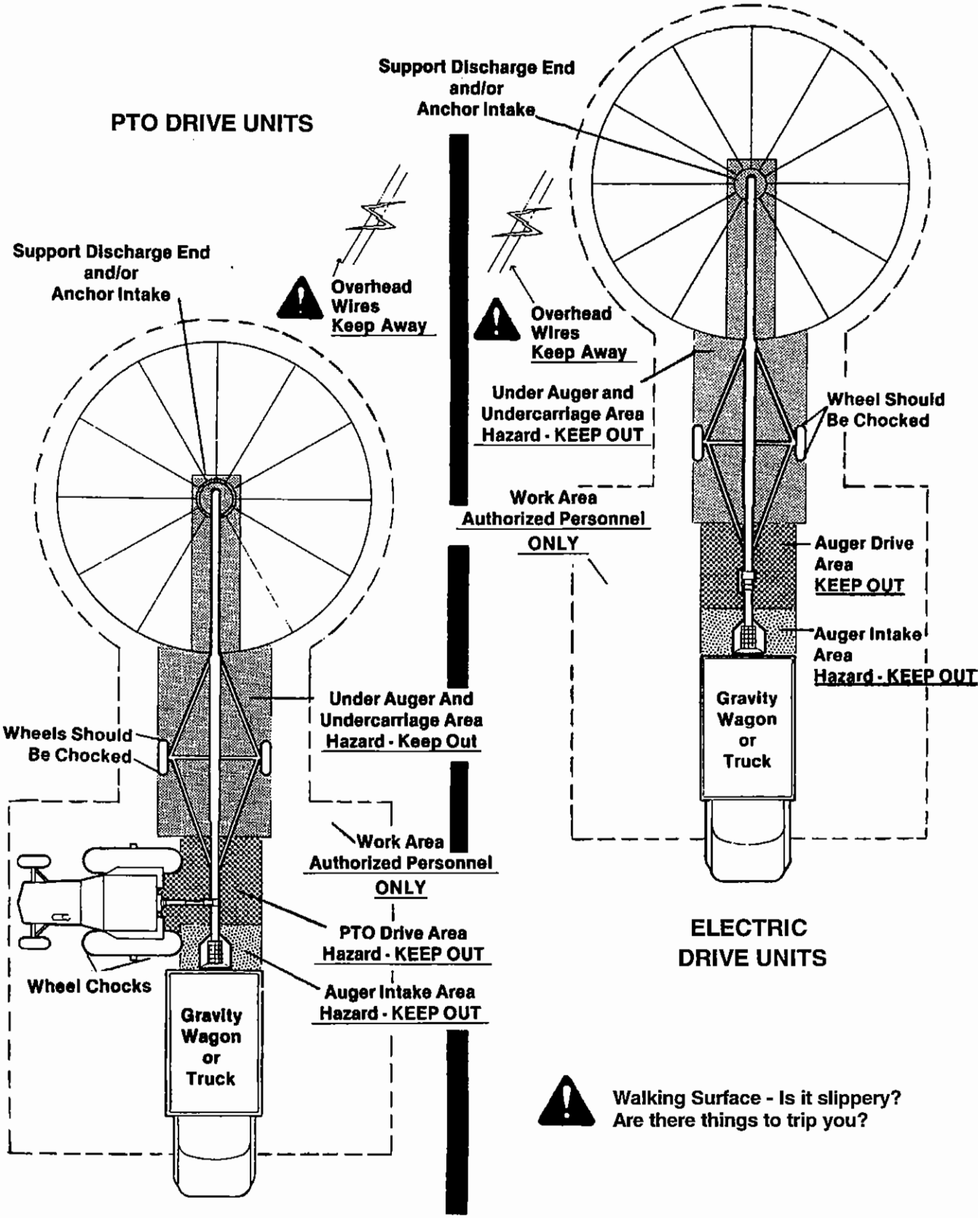

OPERATING PROCEDURES

START-UP AND BREAK-IN INFORMATION

It is essential to inspect your drive before adding power and know how to shut down in an emergency. During the operation of your auger, one person shall be in a position to monitor the operation. Any screw conveyor when it is new or after it sets idle for a season should go through a "break-in" period. The auger should be run at partial capacity until several hundred bushels of grain have been augered to polish the flighting assembly and tube. When the screw and tube are polished and smooth the auger can be run full.
Never operate the auger empty for any length of time as excessive wear will result. If at all possible do not stop or start the auger under load, especially before the flight and tube become well polished, as this may cause the auger to "freeze-up".

During the initial start-up and break-in period, the operator shall be aware of any unusual vibrations or noises. That would indicate a need for service or repair.
Keep all safety shields and devices in place.
Keep hands, feet and clothing away from moving parts.
The operator should have a full view of the auger Work Area and check that all personnel are free from Designated Work Area before adding power.

Proper auger flight speed is important for efficient operation of the auger.

1. If the flight speed is in excess of what is recommended, excessive wear will result.
2. If the flight speed is slow and the auger flighting is permitted to "load-up", high torque will be required to turn the auger flighting, and damage to the auger can result. Under these conditions, use an optional control gate to control the amount of grain fed into the auger.

DIRECT PTO DRIVE INFORMATION

Only use a tractor with 540 RPM Power Take-Off.

The standard direct PTO may be driven from either side (as explained in the Direct PTO Drive Assembly Section). If the tractor output PTO shaft is operated at 540 RPM, the auger will have a 540 RPM auger flight speed.

NOTICE: The PTO driveline furnished with the auger is equipped with a "Spring-Lok" coupler at the tractor end. This type coupler is spring loaded and will fit the standard 1 3/8" x 6" spline PTO output shaft from a tractor.

See that the PTO driveline is securely attached and the retaining balls of the "Spring-Lok" coupler lock into the ring groove of the tractor PTO output shaft. Check this by trying to pull the driveline off of the tractor PTO output shaft. The chain for the PTO driveline shield must be attached to the tractor to prevent the shield from rotating.

CHECK THE FOLLOWING BEFORE ADDING POWER:

1. Be certain that the PTO driveline is securely attached to the auger and the tractor.

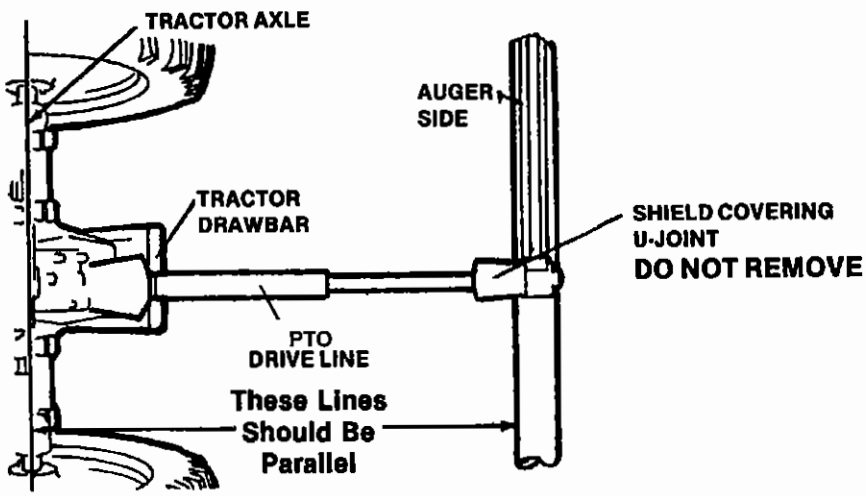

01168A1 A0005598

OPERATING PROCEDURES

PTO DRIVE INFORMATION - CONT.

2. Align PTO driveline with tractor. The PTO driveline furnished with the auger is a pin stop type-that is, the two telescoping sections will not separate. It is a good practice to operate the PTO driveline in as short a configuration as possible. Keep the PTO driveline in as straight a line as possible during operation. When connecting tractor and auger, always make sure the tractor axle and side of auger are parallel.
   KEEP THE U-JOINT ANGLES EQUAL.

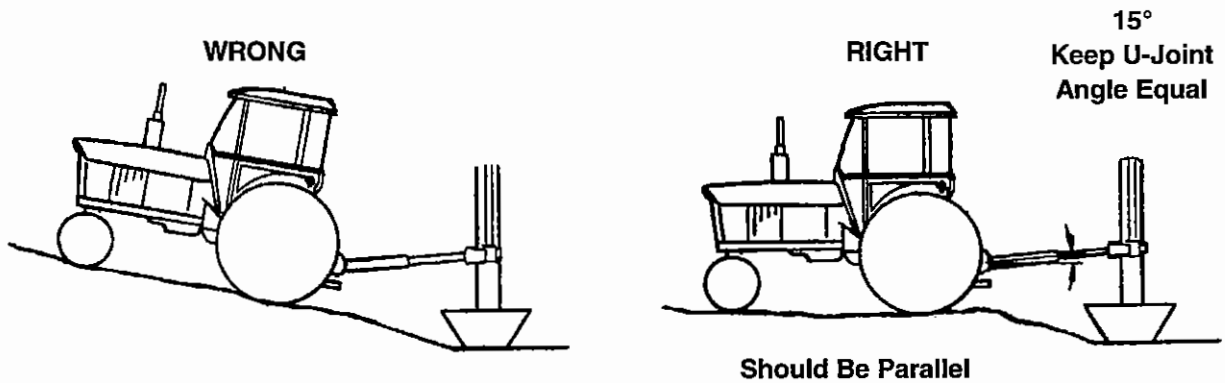

3. If the tractor and auger are on unlevel ground or at different levels, place them so the center line of the tractor and the gearbox shaft are parallel.

TO START AUGER:
1. Before starting the tractor, be certain power to PTO is off.
2. Start tractor.
3. Engage PTO at a slow RPM, then work up RPM to recommended speed.

IMPORTANT: Engage PTO at a slow RPM to minimize shock loads. Then work up RPM to recommended speed.

TOP MOUNTED ELECTRIC MOTOR DRIVES:

Always use a motor with required H.P. suggested in charts shown on page 9. Use motor that operates at 1750 RPM.

Electric motors and controls shall be installed by a qualified electrician and must meet the standards set by the National Electrical Code and all local and state codes. Reset and Motor Starting Controls must be located so that the operators have full view of the entire operation.

A magnetic starter should be used to protect your motor when starting and stopping. It should stop the motor in case of power interruption, conductor fault, low voltage, circuit interruption or motor overload. Then the motor must be restarted manually. Some motors have built-in thermal over-load protection. If this type motor is used, use only those with manual reset.

NOTE: Motor pulleys are not furnished with the auger.

OPERATING PROCEDURES
TOP MOUNTED ELECTRIC MOTOR DRIVE (CONT.)

The horsepower recommendations are for augering reasonably dry grain at varying angles. High moisture grain (above 15%) will require greater power and maximum possible capacity will be less with high moisture grain than with dry grain.

Disconnect power before resetting motor overloads.
Make certain electric motor is grounded.

Horsepower Recommendations 8" AUGERS Use 4.0" O.D. pulley on motor For 467 Auger Speed Note: For high capacity use 4.5 O.D. pulley on motor for 525 Auger Speed.	
LENGTH	HORSEPOWER
33'	5
41'	5
47'	5-7 1/2
53'	7 1/2-10
57'	7 1/2-10
59'	10-15
62'	10-15
65'	10-15
71'	15-20

CHECK THE FOLLOWING BEFORE ADDING POWER:
1. Check that belt guard is in place, secured and functional.

TO START AUGER
1. Start electric motor before conveying grain.

TO STOP AUGER
1. Let auger empty of grain before stopping.
2. Shut off electric motor and lockout.

OPERATING CAPACITIES

Capacities of screw conveyors or augers can vary greatly under diverse conditions. Different materials, moisture content, amounts of foreign matter, angle of operation, methods of feeding and speed all play a role in the performance of the auger. Roughly 3200 BPH will be achieved augering dry grain. Maximum possible capacity will be less with high moisture grain (above 15%) than with dry grain.

OPERATING PROCEDURES

SHUTDOWN

A. NORMAL SHUTDOWN
When shutting down the auger make certain that the hopper and auger are empty before stopping the unit. Before the operator leaves the work area, the power source shall be locked out. (See Lockout.)

B. INTERMITTENT OPERATION SHUTDOWN
NOTE: When augers are stopped and restarted under full load, it may result in damage to the auger. Therefore, if intermittent operation is to be carried out, it is advisable to reduce the load level. When kept from absolute filling, auger start-up is easier and operation is more efficient.

C. EMERGENCY SHUTDOWN
Should the auger be immediately shut down under load, disconnect and lockout the power source. Clear as much grain from hopper and auger as you can. Reconnect power source and clear auger. Never attempt to start when full.
NOTE: Starting the unit under load may result in damage to the auger. Such damage is considered abuse of the equipment.

LOCKOUT

If the operator must leave the work area, or whenever servicing or adjusting, the auger must be stopped and the power source turned off. Precaution should be made to prevent anyone from operating the auger when the operator is absent from the work area.

DIRECT PTO DRIVE: Remove ignition key or coil wire from power source. (If this is impossible, remove the PTO driveline shaft from the work area.)

TOP MOUNTED ELECTRIC DRIVE: A main power disconnect switch capable of being locked only in the off position shall be provided.

RELOCATION OF AUGER

When grain conveying operation is completed, the auger should be moved away from the bin and lowered. The auger then can be moved to a different bin for more conveying operations or cleaned up and stored.

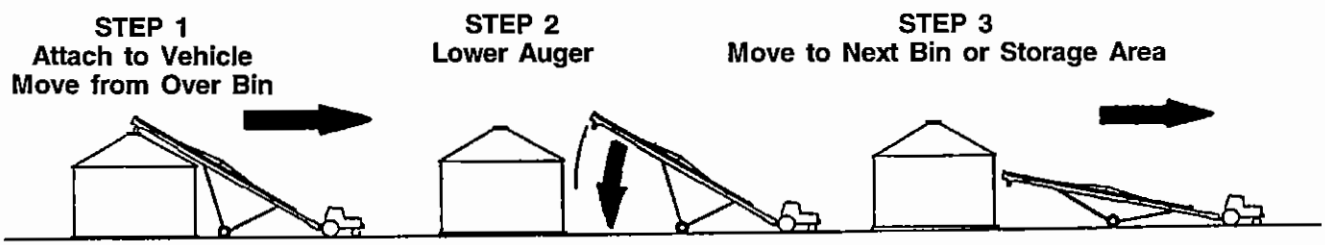

Step 1

A. Empty all grain from the auger and clean up area.
B. Untie any anchors or remove all supports.
C. Disconnect the power source.
Top Mounted Electric Drive - Unplug electric motor, wind up electric cables.
Direct PTO Drive - Disconnect PTO driveline from tractor and place in support provided for transporting.
NOTE: The bracket pin must be in place to hold the PTO driveline in the support during transporting.
D. Raise the auger so the discharge spout is clear of bin opening. See Auger Raising Instructions on page 5.
E. Remove hopper from auger intake and secure hitch in place with bolt and nut.
F. Lift the auger intake and hitch to the towing vehicle. See Hitching Instructions on page 3.
G. Remove wheel chocks.
H. Move auger slowly away from the bin with towing vehicle--**NOT BY HAND.**

OPERATING PROCEDURES

RELOCATION OF AUGER - CONT.

Step 2

A. Lower auger immediately after clear of bin or storage structure. See Winch Lowering Instructions on page 5.

IMPORTANT: Lower the auger, even if relocating to a bin in the immediate area.

Step 3

A. Move the auger to next bin or storage area. We recommend that the auger be stored in the full down position with intake end anchored.

B. Inspect the auger as outlined in the "Machine Inspection Section" on page 2.

TROUBLE SHOOTING

LOW CAPACITY

The auger may not be getting enough grain. Check to see the intake has not "bridged over" restricting the flow.

The exposed flighting at the auger intake should be covered with grain to achieve maximum capacity.

Check auger speed. Refer to page 9. A slow speed (below recommended speed) will result in low capacity.

AUGER PLUGS

The auger may be getting too much grain where it is "jamming" inside the housing. An optional control gate may be necessary at the intake end.

On motor drive augers, the motor may be too small or wired improperly.

If wet grain or other hard to move material is being augered, use a larger size motor than recommended for normal use.

Is the auger free of any foreign material, such as sacks, tarp corners, etc.? A plug of the discharge end will cause an auger plug.

On electric powered units, check to see if all belts are lined up and tensioned properly.

EXCESSIVE AUGER NOISE

Damage may have occurred to the auger flighting, thus causing noise. Damage usually occurs because of foreign material having been run through the auger. It may be necessary to remove the flighting for inspection.

IMPORTANT:

An auger should be frequently checked and serviced to operate freely. Keep all guards and shields in place. Replace any that are damaged or lost. An auger should be run partially full for several hundred bushels to polish the flighting when it has not been used for an extended period of time. An auger with flighting that has not been polished in this manner requires greater horsepower, and damage to the drive and/or flighting can result if overloaded.

Our augers are well made and we are proud of our line of equipment. We would like you, as our customer, to do your part in using caution and good judgement in using our equipment, as well as any other machinery. Any parts for replacement should be replaced with parts of the same type and size. Do not modify or alter any of the auger components.

LUBRICATION AND MAINTENANCE

For economical and efficient operation of your auger maintain regular and correct lubrication. Neglect leads to reduced efficiency, excessive wear and needless down time.

Keep all safety shields and devices in place.
Never clean adjust or lubricate a machine that is in operation.

The following will detail the parts needing lubrication and the various conditions which determine the time span.

GEARBOX

The gearbox is shipped without oil. At field assembly of auger, 90 E.P. (non-foaming) oil is to be added to the gearbox until half full. Check and maintain the level regularly.

PTO DRIVELINE

Augers equipped with PTO driveline, should have the u-joints lubricated at approximately ten (10) hour intervals with SAE multipurpose type grease.

The PTO driveline is equipped with a shear bolt at the auger connection. The shear bolt protects the auger from damage if the auger becomes plugged or subjected to high loads. It is important to use the correct replacement bolt of the proper size and strength to insure that the shear device will protect the auger and operator. For 8" augers, order replacement shear bolt, Part No. 33046 - 5/16" - 18 x 1" long grade 5 bolt. Extra shear bolts are provided with auger.

ENCLOSED DRIVE LUBRICATION

The enclosed drive is located at the discharge end of the auger housing and is shipped without oil. Oil is to be added to the unit during field assembly of the auger. Oil will dissipate under normal operating conditions, therefore the oil level should be checked regularly. Add 90 DP (non-foaming) oil until the level of the oil reaches the check port.
DO NOT ADD MORE OIL THAN RECOMMENDED. ADDITIONAL OIL MAY DAMAGE THE SEALS OR BE FORCED OUT THOUGH THE VENTED PLUG.

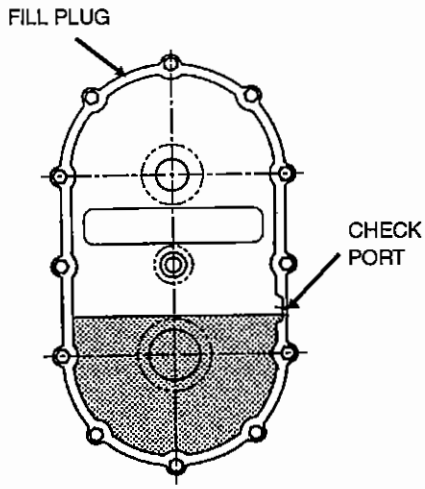

For lubrication in normal operating temperature between 40°F to 120°F, we recommend the use of non-foaming, multi-purpose gear oil. SAE 90 weight. For temperatures below 40°F, use SAE 80 weight oil. Use grade commercially available for automotive differentials. Extra pressure additives may be of value in severe applications.

FRICTION TYPE WINCH

The following lubrication checks should be made to the winch periodically.

The auger should be in the lowered position with undercarriage lift arm slide against the upper head stop when this inspection is being performed. Refer to operating and maintenance instructions furnished with your winch for proper inspection methods.

1. All gears should have a film of grease on them at all times.
2. The following parts must be wet with oil at all times:
   (A) Two bushings located at ends of drum shaft.
   (B) The ratchet pawl pivot.

IMPORTANT: Do not get oil or grease on brake disc faces (located between ratchet gear, brake hub and pinion shaft.)

3. Check brake disc, if worn to less than 1/16 of an inch thick, cracked or broken, replace both discs.

BELT ADJUSTMENT

On drives that are powered by belts, the belt tension will need periodic adjustment. See the operating procedures section for belt adjustment location.

LUBRICATION AND MAINTENANCE (CONT'D)

BEARINGS

Drive Shaft Bearing

All drive shafts are supported by self-aligning, sealed ball bearings, which have been packed at the factory and require no further lubrication. There is no adjustment to be made to the bearings but to check that the retainers are firmly fastened to the bearing stand. Also check that the setscrews in the lock collars are tight against the drive shaft, securing the lock collars to the drive shaft.

IMPORTANT: The complete drive shaft must be shielded with drive shaft covers during operation.

KEEP ALL SAFETY SHIELDS AND DEVICES IN PLACE.

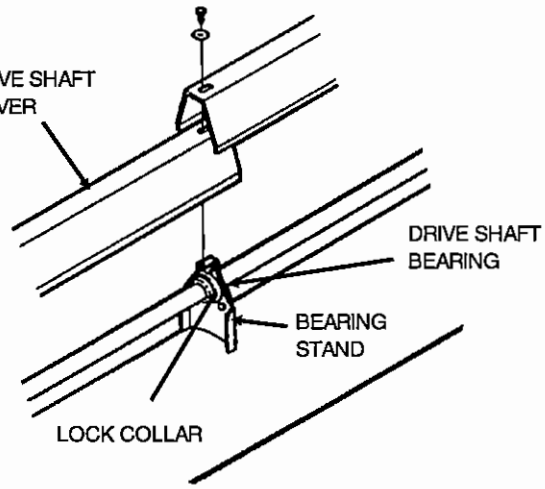

Intake Guard Bronze Bearing

Every auger has a bronze-with-graphite bearing at the intake end. This bearing requires no lubrication. If wire guard is damaged, replace the intake guard.

Undercarriage Axle Spindle Bearing

Tapered roller type bearings are standard for 8" augers and should be repacked with grease and adjusted annually or as needed, determined by usage.

TAPERED ROLLER TYPE BEARING ASSEMBLY

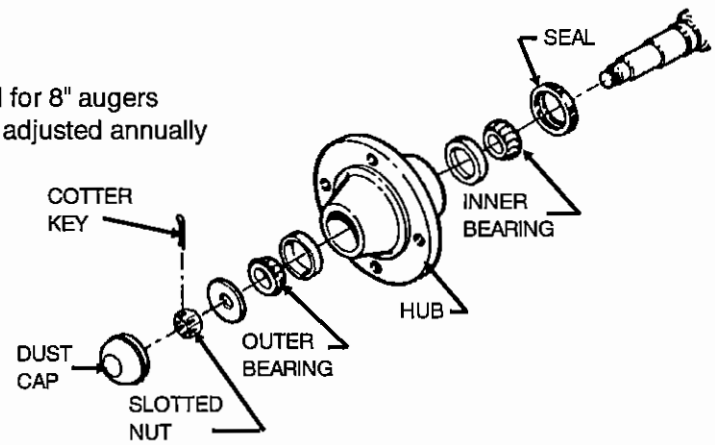

Care must be used in dismantling the tapered roller bearings. First remove the dust cap by prying around its edges. Remove the cotter pin, slotted nut and flat washer. Carefully remove the hub and bearings from the spindle. Inspect all parts for wear or damage and replace with new ones if necessary.

When reassembling the hub, repack both bearing cones with grease and fill the hub cavity 1/3 full. Place inner bearing assemblies into the hub, and then press grease seal into hub and carefully reinstall the hub on the spindle. When placing hub on spindle be careful not to damage the lip of the grease seal. Install outer bearing assembly into the hub, and replace flat washer and slotted nut. Tighten the slotted nut to seal the bearings until the hub binds as you rotate hub. Back off the slotted nut to the next slot and pin with a new cotter pin. Use a 5/32" cotter pin 1-1/4" long. Replace dust cap.

ASSEMBLY INSTRUCTIONS

LAY OUT THE AUGER TUBE

Choose an area of open level ground accessible to chain hoist or other lifting device where the auger may be laid out full length. Arrange the tube sections in their relative positions. The drive shafts on each section must be in line. Also, level the track on the upper section to the undercarriage mount and winch mount on the lower section.

For ease of assembly, place the tubes on stands or saw horses. This will aid the assembly of the undercarriage. Be sure the supports can bear the weight of the auger tubes. A stand height of about 36" is recommended.

NOTE: If optional corn screens are included, be aware that they are placed in different locations depending on the type of drive used to power the auger. If interference between the corn screens and drive components occurs, check to see that the proper corn screen housing is being used.

FIG. 1

33' Model

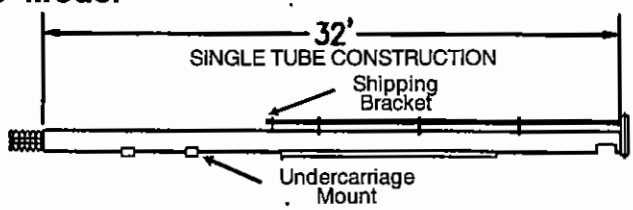

41' Model

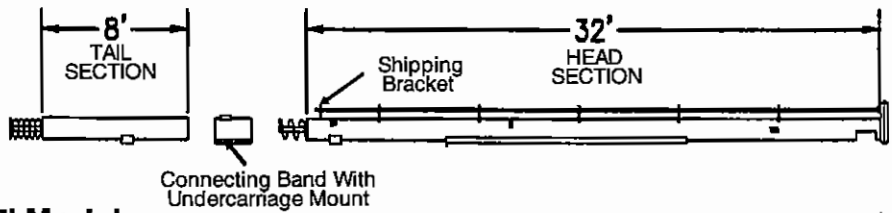

47' Model

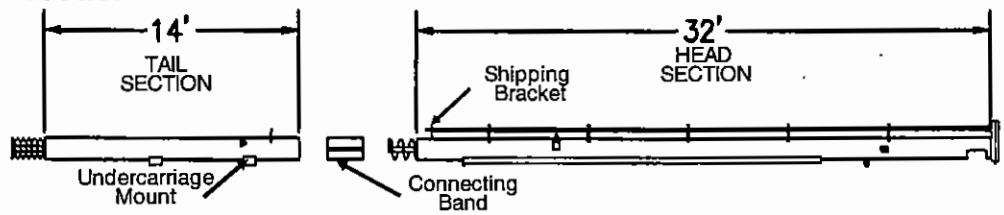

53' Model

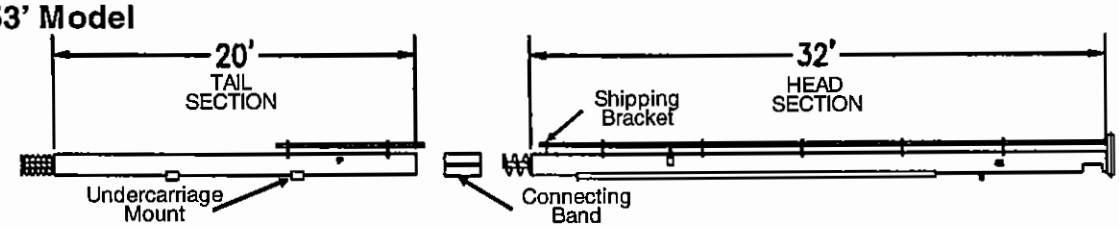

57' Model

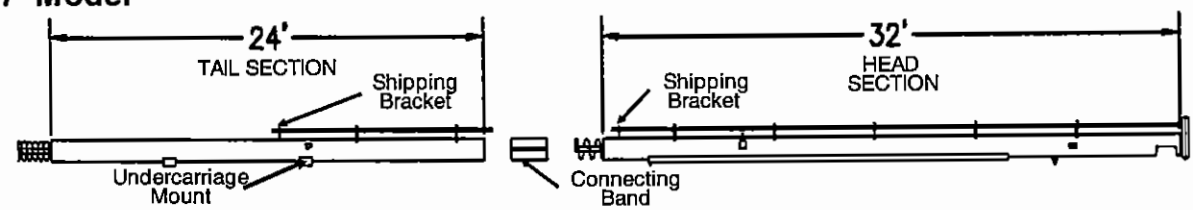

59' Model

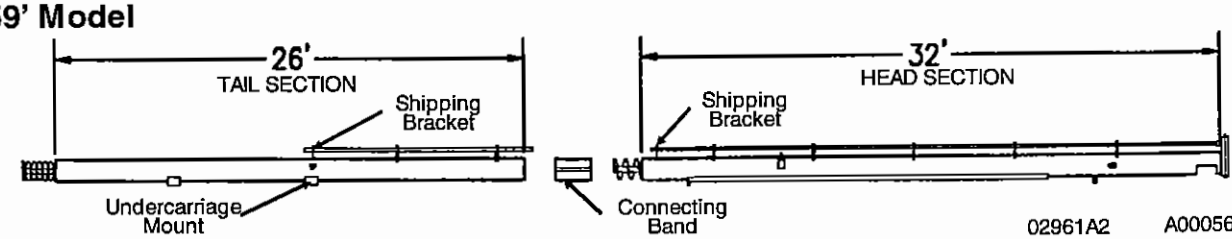

02961A2 A0005605

ASSEMBLY INSTRUCTIONS

LAY OUT THE AUGER TUBE - (CONT.)

62' MODEL

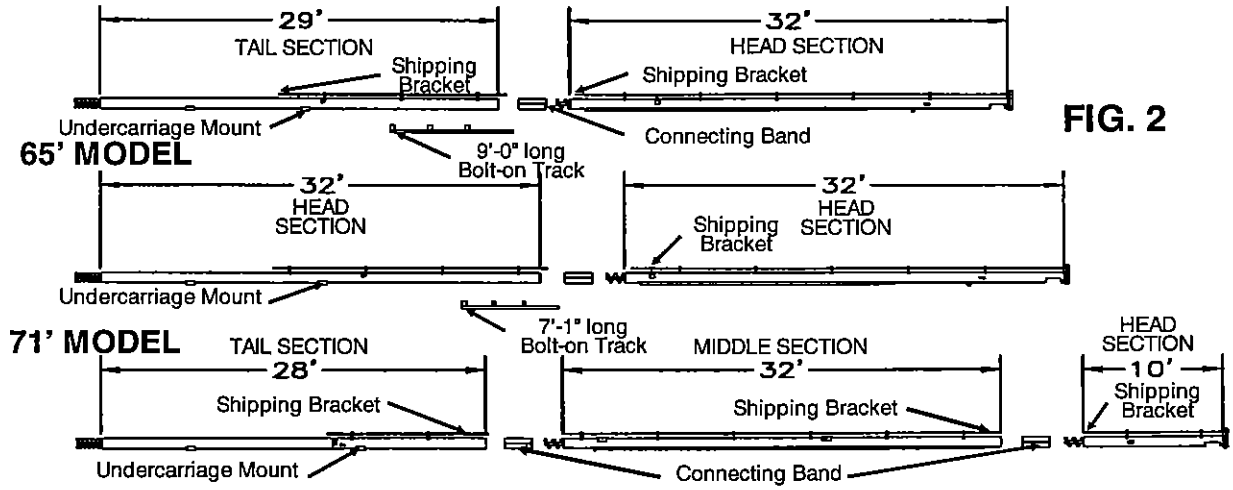

FIG. 2

SHIPPING BRACKET

Remove the shipping bracket from the drive shaft. See Figure 1 or 2 for locations of shipping brackets.

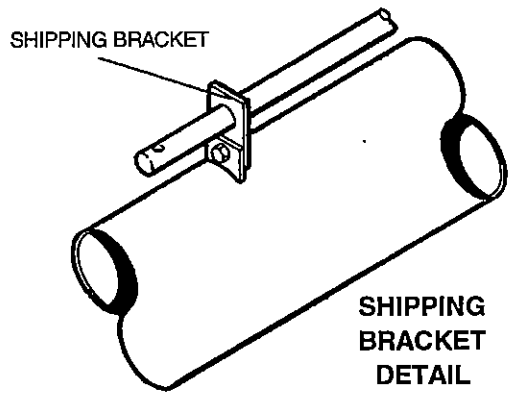

SHIPPING BRACKET DETAIL

FLIGHT AND AUGER HOUSING ASSEMBLY

NOTE: For units with optional internal flight bearings, go to page 16 for flight and housing assembly.

Step 1. Bolt the auger flighting sections together using two 7/16" x 3" (grade 8) black hex head capscrews and side depress locknuts. The lower flight will lap the upper flight about one inch. See Figure 3. NOTE: Flight connection between middle and head section on the 71' model does not lap.

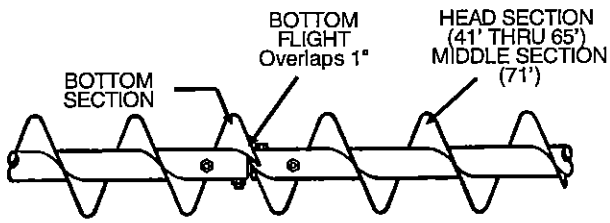

FIG. 3

Step 2. Install a 1/4" x 1 1/2" square key into the end of each drive shaft. Slide a 1" to 1" drive shaft coupler onto the end of one of the drive shafts.

Step 3. As you slide the auger housings together, couple the drive shafts.

Step 4. Be sure the auger housings are pushed tight together. Position the connecting band so half of the band is on each side of the joint. Secure the band using (6) 3/8" x 1 1/2" long (grade 5) hex head capscrews and nuts.

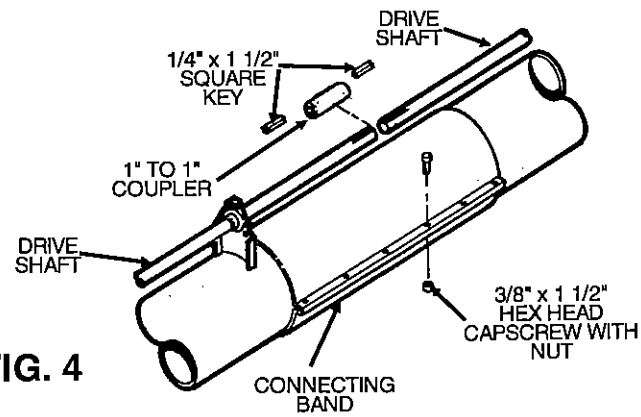

FIG. 4

ASSEMBLY INSTRUCTIONS

AUGER FLIGHT AND AUGER HOUSING SECTION ASSEMBLY FOR UNITS WITH OPTIONAL INTERNAL FLIGHT BEARING

Step 1. Install a 1/4" x 1 1/2" long square key into the end of each drive shaft. Slide a 1" to 1" drive shaft coupler onto the end of one of the drive shafts.
Step 2. As you slide the auger housing section together, guide the drive shaft into the coupler and the flight connection stub (in the upper flight section) into the lower flight section.
Step 3. Using the inspection hole as an access, bolt the flight connecting stub to the lower flight section using two 7/16" x 3" long (grade 8) black hex head capscrews and side depress locknuts.
Step 4. Slide the connecting band so it is spaced about half way on each auger housing. Tighten the connecting band in place using six 3/8" x 1 1/2" long (grade 5) hex head capscrews and nuts.

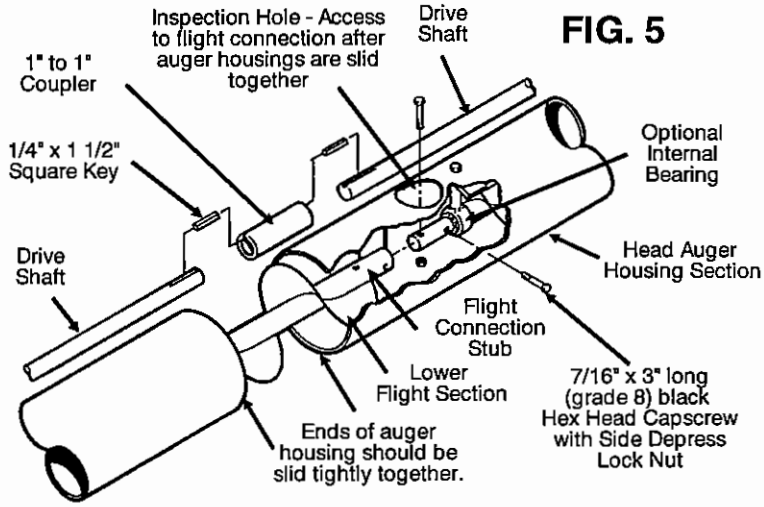

FIG. 5

NOTE: The connecting band was not shown in the drawing so the flight connection would be easier to see.

BAND-ON TRACK TO AUGER HOUSING - 62' ONLY

A band-on track is used on 62' and 65' models - See instructions on page 17 for band-on track assembly for 65' model.

Step 1. Fasten the two connecting plates to the inside of the lower end of the track welded to the upper auger housing, using two 3/8" x 1 1/4" long grade 5 hex head capscrews, flat washers, lockwashers and nuts per each connecting plate. IMPORTANT: The connecting plates must be assembled to the inside of the track.
Step 2. Position the band-on track under the lower auger housing section (with the holes in the track positioned toward the upper auger section.)
Step 3. Fasten the two connecting plates to the band-on track using two 3/8" x 1 1/4" grade 5 hex head capscrews, flat washers, lockwashers and nuts per each connecting plate. Using the slots in the connecting plate, slide the ends of the track together so they are touching.
Step 4. Using three 4" wide halfbands, secure the band-on track to the lower auger housing. Use four 5/16" x 1 1/2" long (Grade 5) hex head capscrews and nuts per each 4" wide halfband.

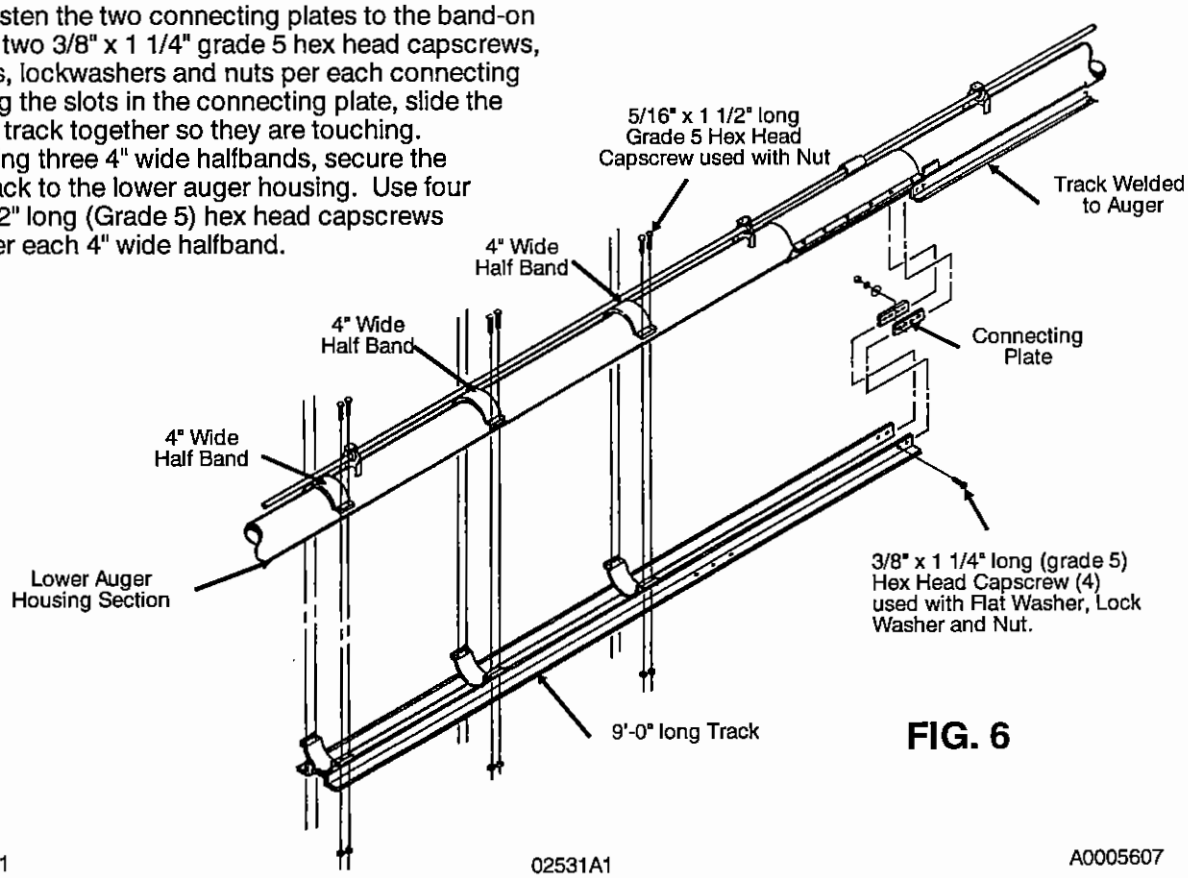

FIG. 6

ASSEMBLY INSTRUCTIONS

BAND-ON TRACK TO AUGER HOUSING - 65' ONLY

A band-on track is used on 62' and 65' models - See instructions on page 16 for band-on track assembly for 62' models.

Step 1. Fasten the two connecting plates to the inside of the lower end of the track welded to the upper auger housing, using two 3/8" x 1 1/4" long (grade 5) hex head capscrews, flatwashers, lockwashers and nuts per each connecting plate. IMPORTANT: The connecting plates must be assembled to the inside of the track.

Step 2. Position the band-on track under the lower auger housing section (with the holes in the track positioned toward the upper auger section).

Step 3. Fasten the two connecting plates to the band-on track using two 3/8" x 1 1/4" (grade 5) hex head capscrews, flat washers, lockwashers and nuts per each connecting plate. Using the slots in the connecting plate, slide the ends of the track together so they are touching.

Step 4. Using one 4" wide and two 2" wide halfbands, secure the band-on track to the lower auger housing. Use four 5/16" x 1 1/2" long (grade 5) hex head capscrews and nuts per each 4" wide half band. Use two 5/16" x 1 1/2" long (grade 5) hex head capscrews and nuts per each 2" wide half band.

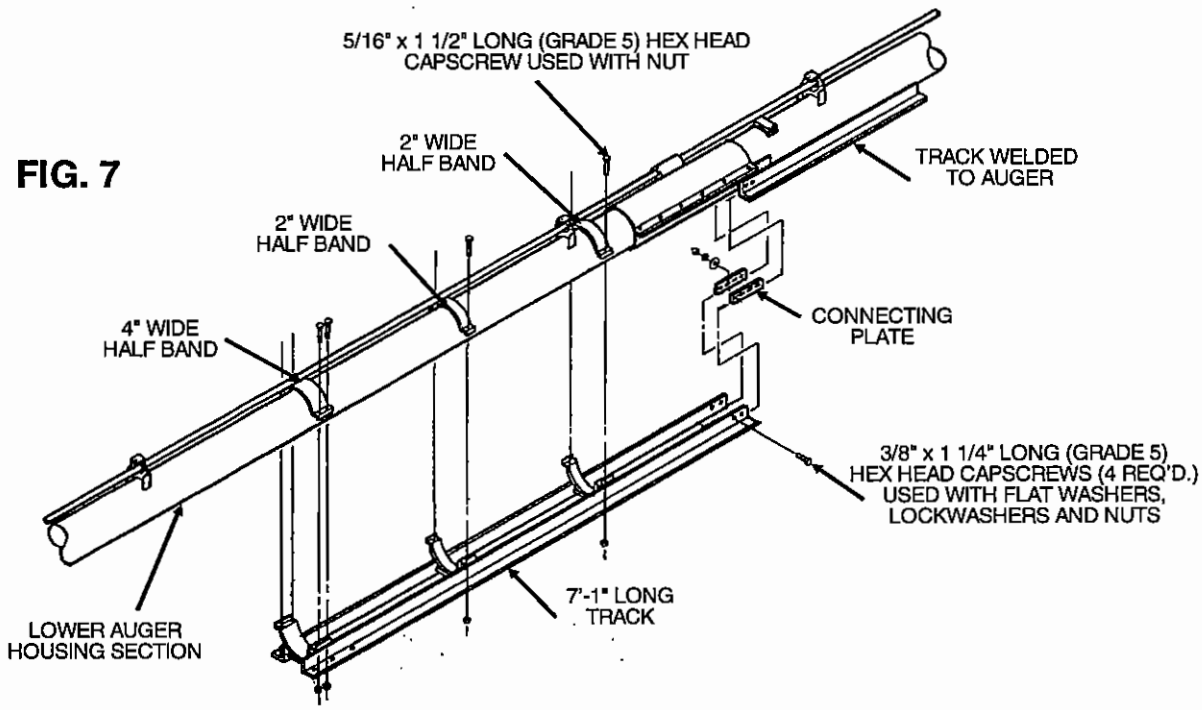

FIG. 7

INTAKE GUARD TO AUGER HOUSING

Install intake guard at intake end of auger housing. As you slide the assembly over the flight and the auger housing, guide the intake stub shaft through the bearing. Clamp the intake guard to the auger housing with the top upper half band above stop, welded to the auger housing. See Fig. 8.

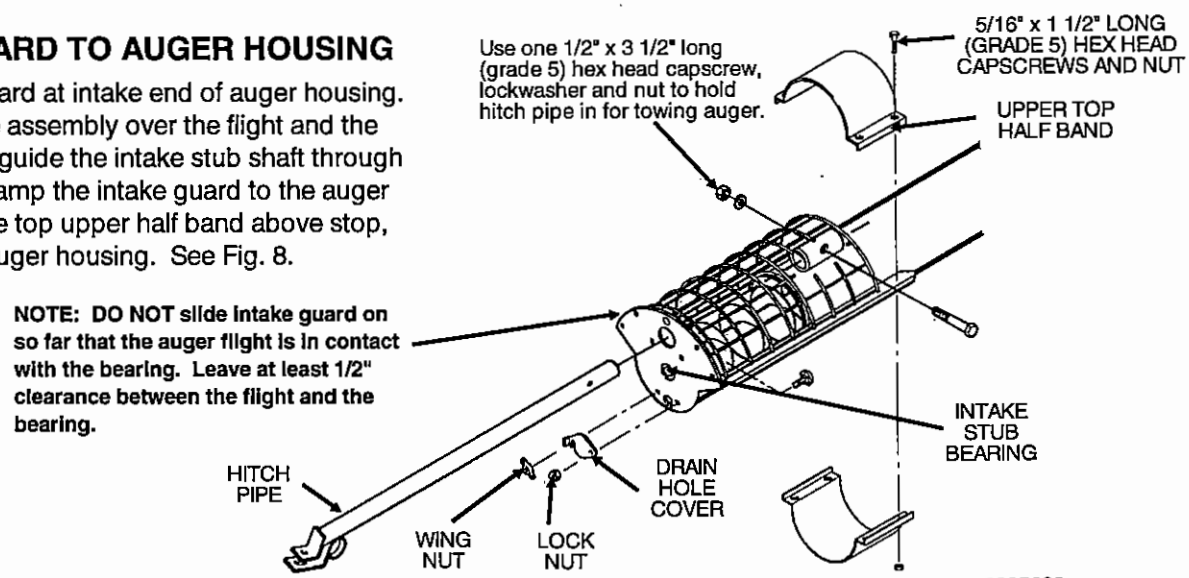

FIG. 8

ASSEMBLY INSTRUCTIONS

NOTICE - The assembly instructions on this page and page 19 and 20 are for PTO Driven Augers ONLY.

DRIVE SHAFT EXTENSION FOR PTO DRIVEN AUGER

Step 1. Bolt bearings to band on bearing stands. (On 47' models bolt bearings to the welded bearing stand on the lower tube section.) Attach each bearing using two retainers and one drive shaft cover mounting bracket. (See Fig. 9)

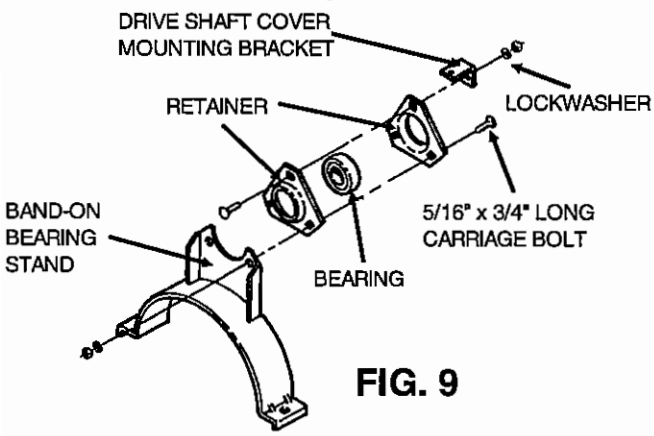

FIG. 9

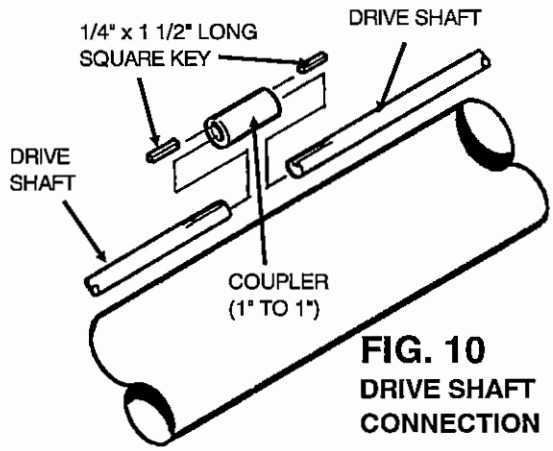

FIG. 10
DRIVE SHAFT CONNECTION

Step 2. Slide bearing stands onto extension drive shaft. Attach extension drive shaft to auger drive shaft using a coupler and two 1/4" x 1 1/2" square keys. See Fig. 12 on page 19 for correct band-on bearing stand spacing. Fasten band-on bearing stand in place, using half bands and two 5/16" x 1 1/2" (grade 5) hex head capscrews and nuts. Tighten two bearing setscrews to lock bearing to extension drive shaft.

GEARBOX ASSEMBLY

Step 1. Add oil to Gearbox. Gearboxes are equipped with two oil fill plugs and are shipped without oil. One plug is vented and must always be on the top side of the box.

IMPORTANT: ADD 90 EP (non-foaming) oil until the gearbox is half full.

Step 2. Attach gearbox to band-on mount with four 3/8" x 3/4" long (grade 5) hex head capscrews and lockwashers.

Step 3. Set gearbox on auger and connect to drive shaft with coupler and two 1/4" x 1 1/2" long square keys. (See Fig. 11)

Step 4. Secure gearbox mount to auger housing using half band (with a manual container bracket) and four 5/16" x 1 1/2" long (grade 5) hex head capscrews and locknuts.

Step 5. Attach the drive shaft cover bracket to top of gearbox with two 3/8" x 3/4" long (grade 5) hex head capscrews with lockwashers.

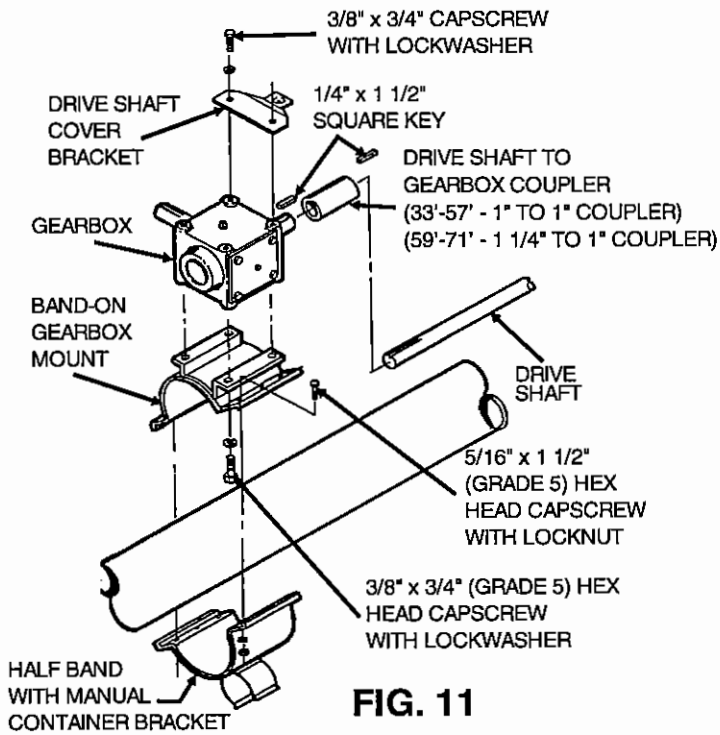

FIG. 11

DRIVE SHAFT COVERS

The covers should be placed on the auger while it is lying on the ground before it is placed on the undercarriage. **PLEASE REMEMBER THESE COVERS PROVIDE IMPORTANT PROTECTION FOR PERSONS AROUND AN AUGER THAT IS IN OPERATION.** Proper installation is important.

Determine the location of the various lengths of drive shaft covers by placing them alongside the tube assembly in the order shown in Fig. 13 on page 20. Begin at the intake end of unit. Work up the unit, overlapping covers at each bearing stand. See page 21 for proper assembly of the drive shaft covers.

ASSEMBLY INSTRUCTIONS

NOTICE: The assembly instructions on this page and pages 18 and 20 are for PTO Driven Augers Only.

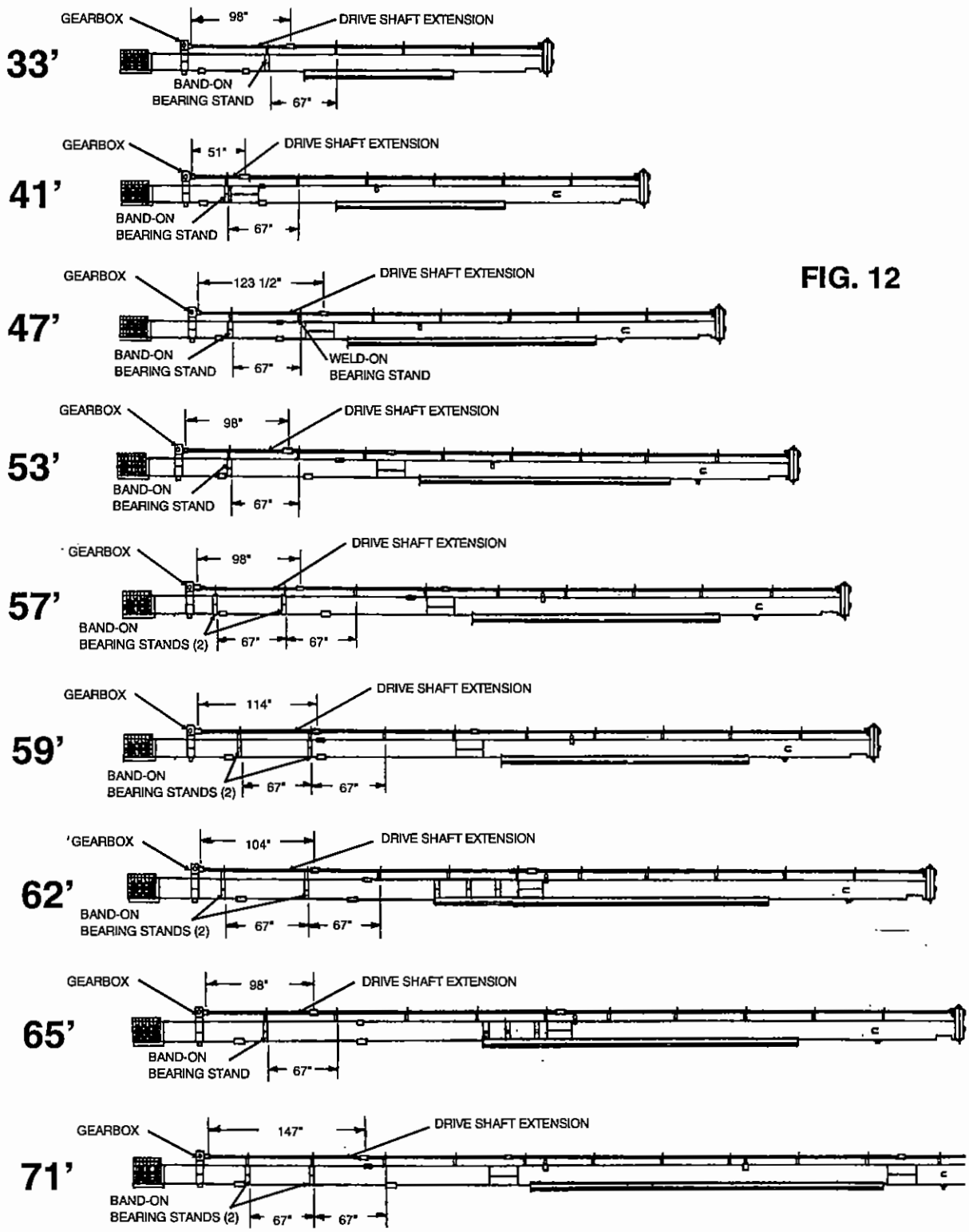

FIG. 12

ASSEMBLY INSTRUCTIONS

NOTICE: The assembly instructions on this page and pages 18 and 19 are for PTO Driven Augers Only.

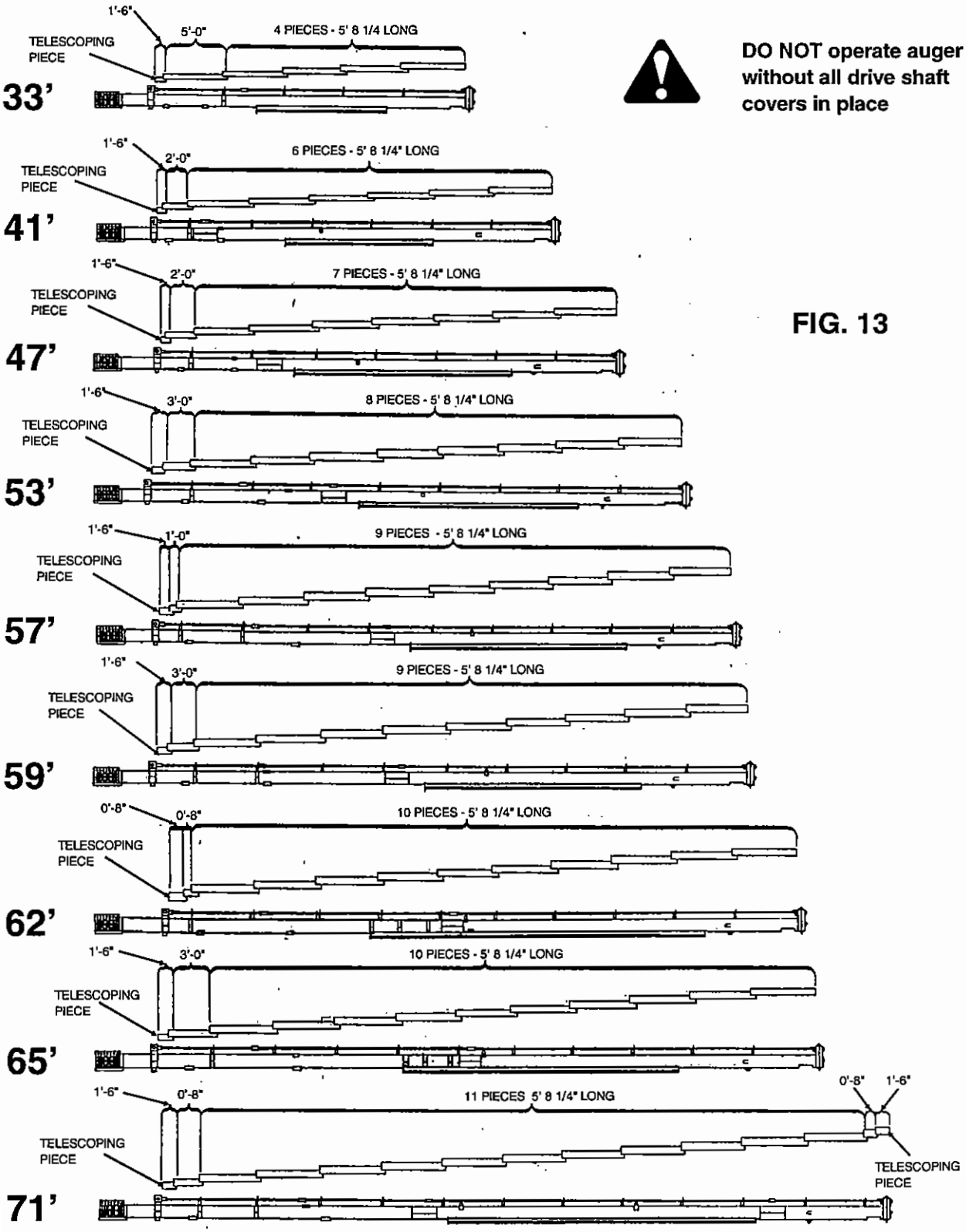

DO NOT operate auger without all drive shaft covers in place

FIG. 13

ASSEMBLY INSTRUCTIONS

DRIVE SHAFT COVERS

TO INSTALL TWO-PIECE DRIVE SHAFT COVER

There is a special two piece section of drive shaft cover that installs between the gearbox and the first bearing stand. It telescopes together to vary in length.

This telescoping cover consists of a standard piece that telescopes into a special piece of cover with retaining bottom edges.

Center the slots in the covers over the hole in the mounting bracket.

Place 1" O.D. flat washer over the slot in the cover and drive the self tapping slotted hex head screw through the hole in the mounting bracket. Tighten the metal screw down to the flat washer and cover. **DO NOT** over tighten and strip out the hole in the mounting bracket. See Fig. 14.

CAUTION: THE TWO PIECE TELESCOPING COVER SHOULD OVERLAP AT LEAST 6" FOR PROPER INSTALLATION.

TO INSTALL ONE-PIECE DRIVE SHAFT COVER

Center the slots in the covers over the hole in the mounting bracket. Place 1" O.D. flat washer over the slot in the cover, and drive the self tapping slotted hex head screw through the hole in the mounting bracket. Tighten the metal screw down to the flat washer and metal cover. **DO NOT** over tighten and strip out the hole in the mounting bracket. See Fig. 14.

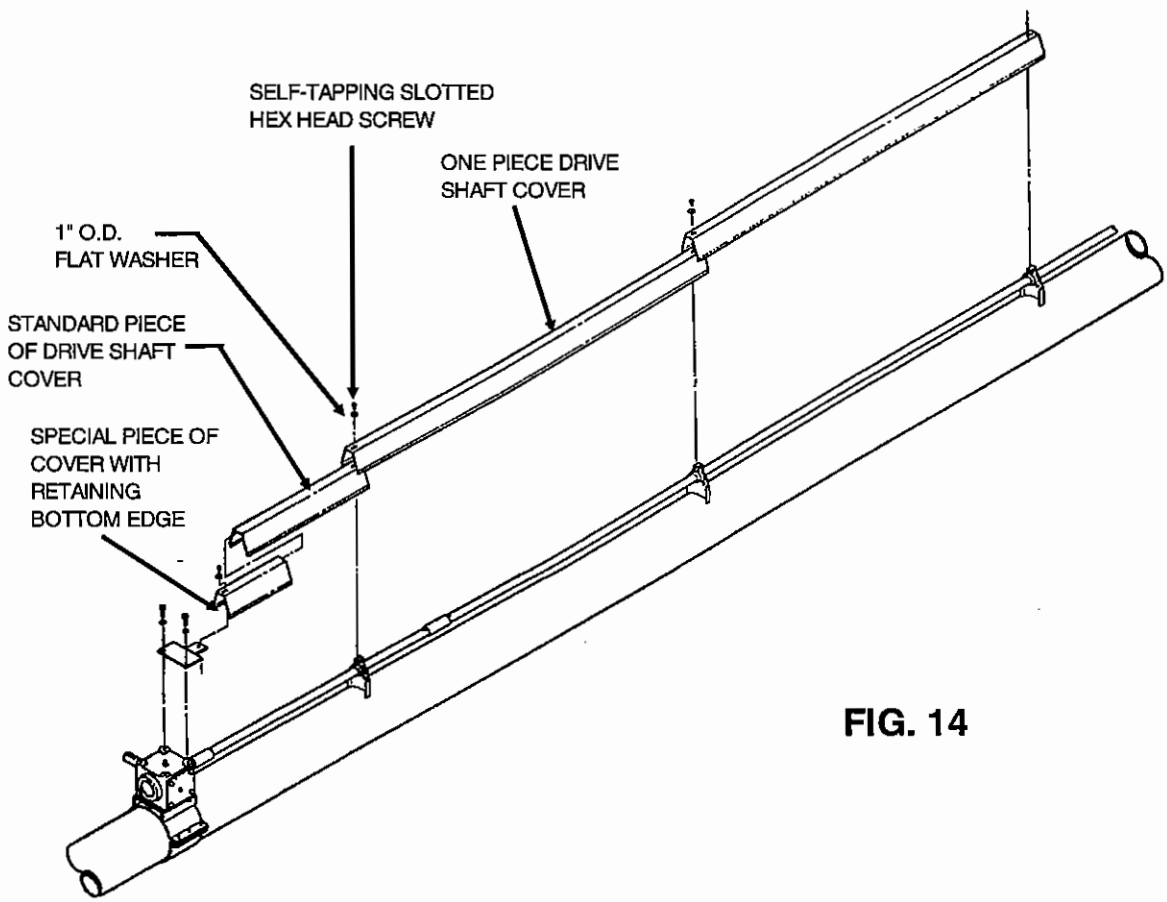

FIG. 14

ASSEMBLY INSTRUCTIONS

NOTICE - The assembly instructions on this page AND PAGES 23 AND THE TOP PORTION OF PAGE 24 are for (Top Mount) Electric Driven Augers ONLY.

DRIVE SHAFT EXTENSION FOR 47' ONLY

Step 1. Bolt bearings to weld-on bearing stand at the upper end of the lower auger section. (See Fig. 18 on page 23 for location.) Attach the bearing using two retainers and one drive shaft cover mounting bracket. (See Fig. 15.)

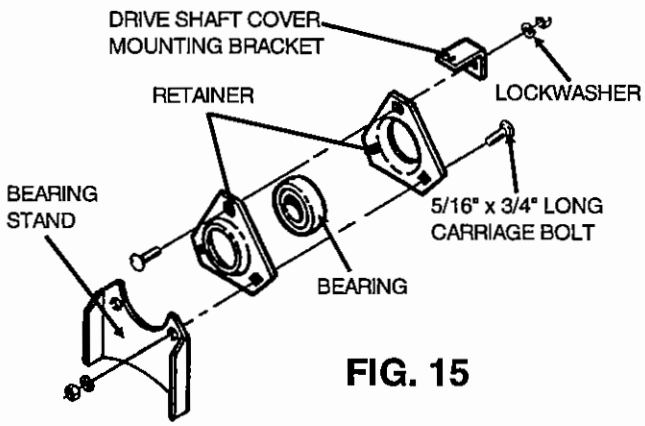

FIG. 15

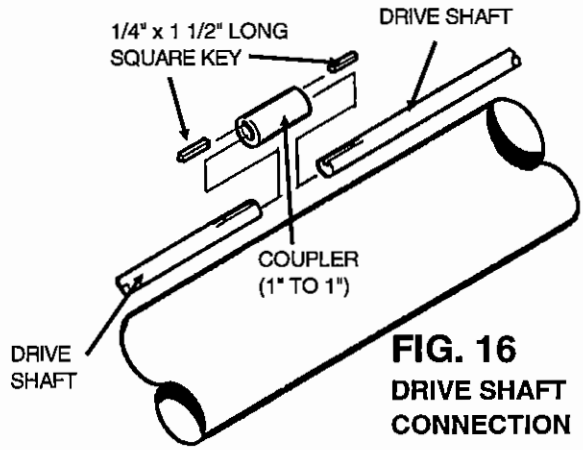

FIG. 16
DRIVE SHAFT CONNECTION

Step 2. Slide 51" long drive shaft through bearing stand. Attach 51" long drive shaft to auger drive shaft using a coupler and two 1/4" x 1 1/2" square keys. Tighten two bearing setscrews to lock bearing to 51" long drive shaft.

GEARBOX ASSEMBLY

Step 1. All oil to gearbox. Gearboxes are equipped with two oil fill plugs and are shipped without oil. One plug is vented and must always be on the top side of the box.

IMPORTANT: ADD 90 EP (non-foaming) oil until the gearbox is half full.

Step 2. Attach gearbox to band-on mount with four 3/8" x 3/4" long (grade 5) hex head capscrews and lockwashers.
NOTE: On 41' electric driven models only, the gearbox will be attached to a gearbox mount that is welded to the connecting band. (See Fig. 19 on page 23.)

Step 3. Set gearbox on auger and connect to drive shaft with coupler and two 1/4" x 1 1/2" long square keys. (See Fig. 17.) NOTE: On 41' models, the connecting band bolts may need to be loosened so the gearbox can be slid forward when the drive shaft coupler is installed. Tighten connecting band bolts after drive shaft coupler is installed.

Secure gearbox mount to auger using half band (with a manual container bracket) and four 5/16" x 1 1/2" long (grade 5) hex head capscrews and locknuts.

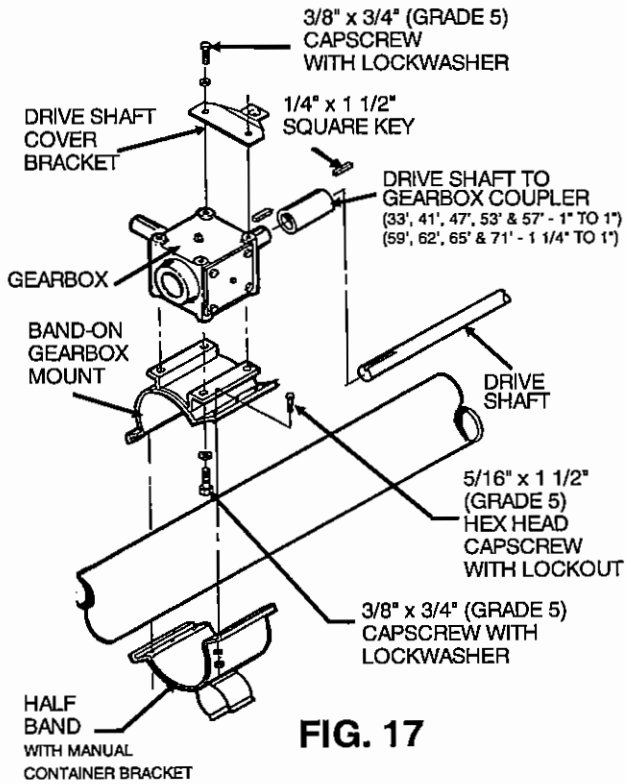

FIG. 17

Step 4. Attach the drive shaft cover bracket to top of gearbox with two 3/8" x 3/4" long (grade 5) hex head capscrews with lockwashers.

Step 5. On 41' models only, using a plain 4" wide halfband, fasten the halfband with a manual container bracket to the auger housing 45" from intake end of the auger tube. (See Fig. 18 on page 23 for location drawing.) Use four 5/16" x 1 1/2" long (grade 5) hex head capscrews and nuts to secure halfbands to auger housing.

ASSEMBLY INSTRUCTIONS

NOTICE - The assembly instructions on this page and on pages 22 and the top portion of page 24 are for (Top Mount) Electric Driven Augers ONLY.

DRIVE SHAFT COVERS

The covers should be placed on the auger while it is lying on the ground before it is placed on the undercarriage. **PLEASE REMEMBER THESE COVERS PROVIDE IMPORTANT PROTECTION FOR PERSONS AROUND AN AUGER THAT IS IN OPERATION.** Proper installation is important.

Determine the location of the various lengths of drive shaft covers by placing them alongside the tube assembly in the order shown in Fig. 18 below and Fig. 20 on page 24. Begin at the intake end of unit. Work up the unit, overlapping covers at each bearing stand. See page 21 for proper assembly of the drive shaft covers.

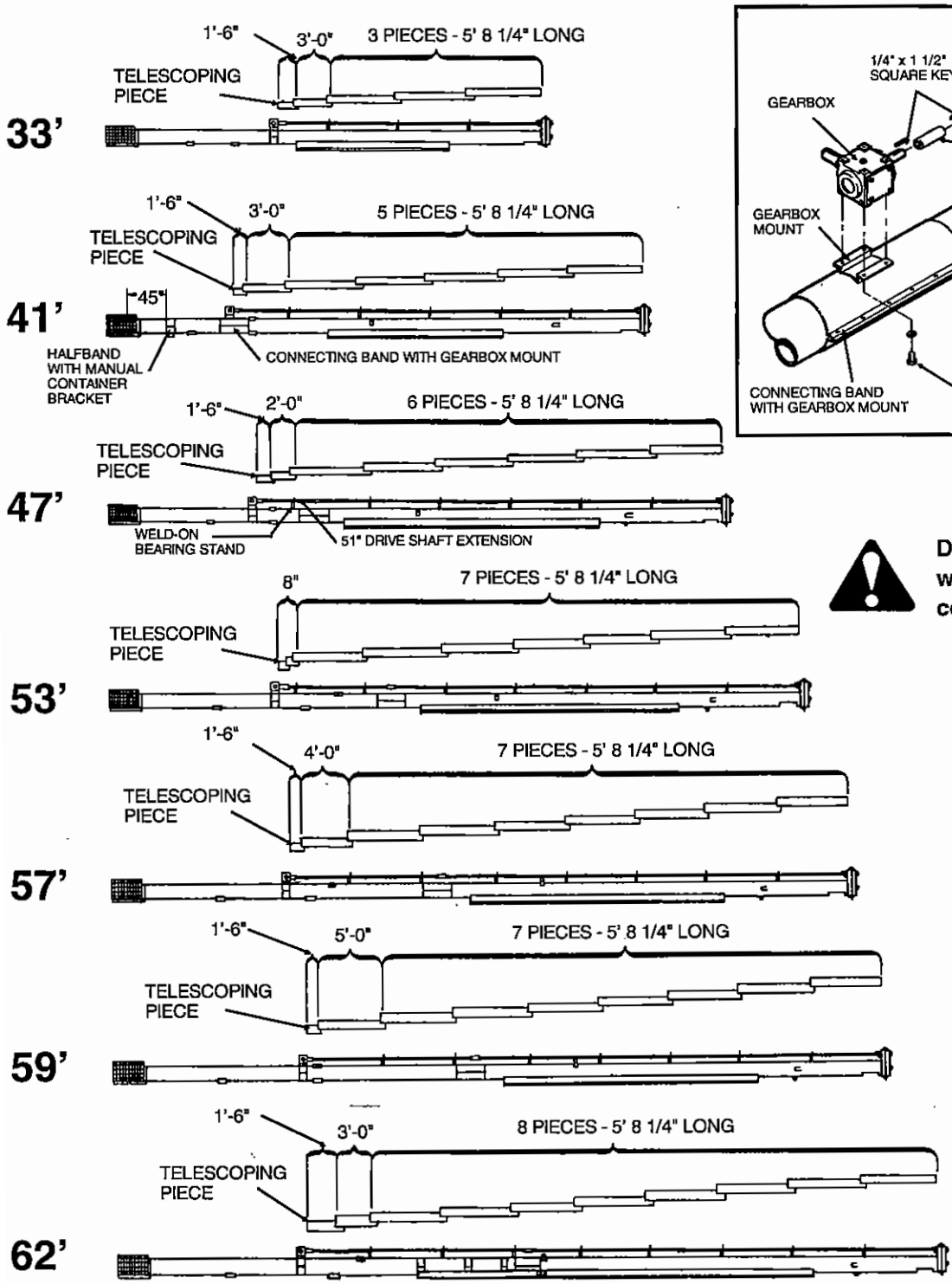

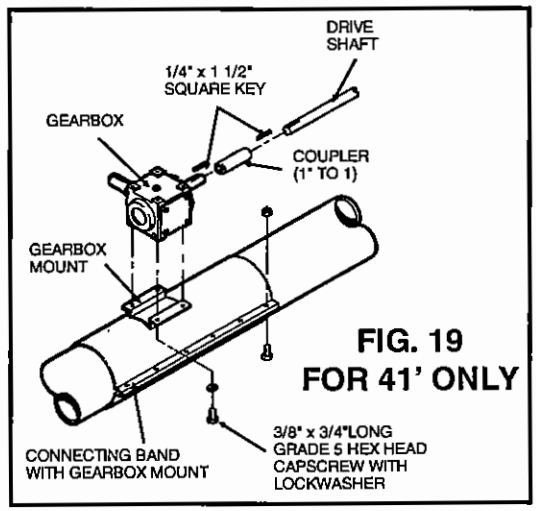

FIG. 19 FOR 41' ONLY

DO NOT operate auger without all drive shaft covers in place.

FIG. 18

01089A2-A 01055A1 A0005614

ASSEMBLY INSTRUCTIONS

NOTICE - The assembly instructions on the top portion of this page and on pages 22 and 23 are for (Top Mounted) Electric Augers ONLY.

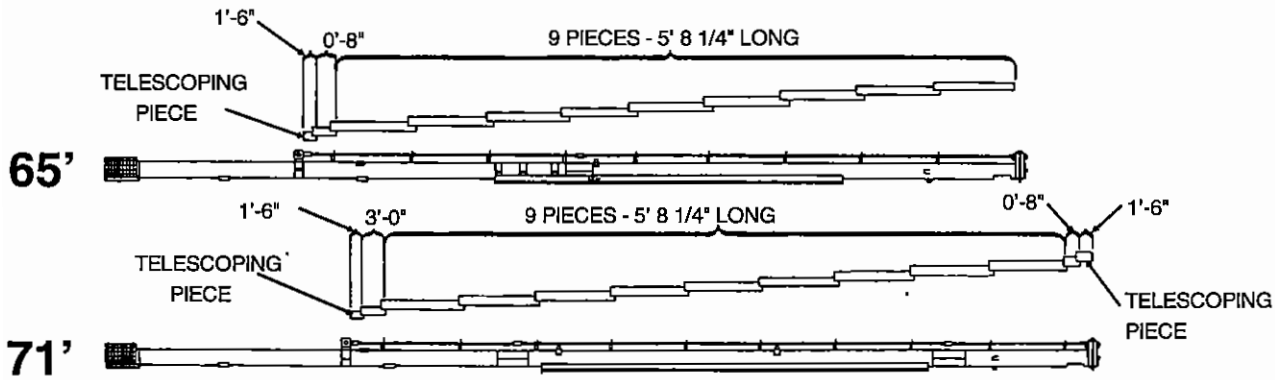

FIG. 20

ENCLOSED DRIVE LUBRICATION

The enclosed drive is located at the discharge end of the auger housing and is **SHIPPED WITHOUT OIL**. Oil is to be added to the unit during field assembly of the auger. Oil will dissipate under normal operating conditions, therefore, the oil level should be checked regularly. Add 3 pints of 90 EP (non-foaming) oil or until the level of the oil reaches the check port. **DO NOT ADD MORE OIL THAN RECOMMENDED.**

ADDITIONAL OIL MAY DAMAGE THE SEALS OR BE FORCED OUT THROUGH THE VENTED PLUG.

For lubrication in normal operating temperature between 40°F to 120°F, we recommend the use of non-foaming, multi-purpose gear oil, SAE 90 weight. For temperatures below 40°F, use SAE 80 weight oil. Use grade commercially available for automotive differentials. Extra pressure additives may be of value in severe applications.

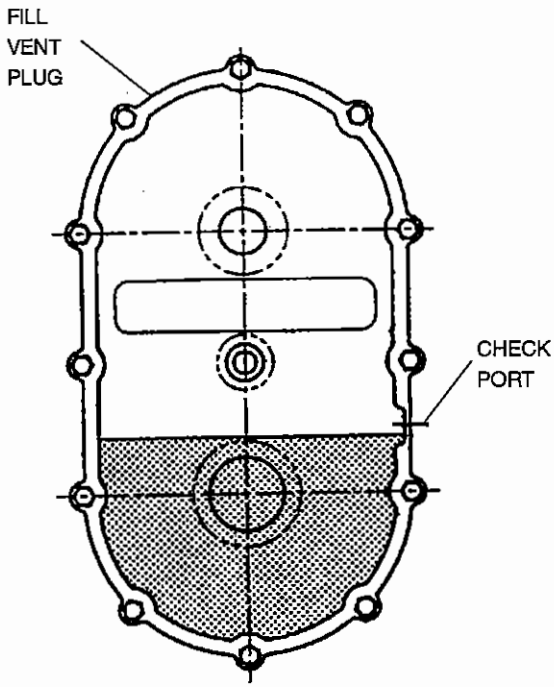

FIG. 23

ASSEMBLY INSTRUCTIONS

(NOTE: Top Truss is not required on 33' Model.)

TOP TRUSS - 41' AUGER

Step 1. To assemble the bolt-together type truss, attach the two vertical truss tubes to the truss mounts on the auger housing using 5/8" x 1 1/2" long (grade 5) hex head capscrews, lockwashers and nuts. (See Fig 25.) To locate the truss mounts on the auger housing, measure from the head plate (at the discharge end). It should be 21'-2" back on the tube for 41' models.

Step 2. Attach the truss top crossmember (24" long) to the vertical tubes using 5/8" x 1 1/2" long (grade 5) hex head capscrews, lockwashers and nuts. **DO NOT** tighten at this time.

IMPORTANT: Be sure to slide the hex head capscrews through the cable clamp clips before putting hex head capscrews through the horizontal tube. The hex head capscrews must go through the horizontal tube from the top.

Step 3. Attach cables to upper cable anchors at discharge end using two cable clamps per each cable. NOTE: Secure the clamp u-bolts against the loose end of the cable.

Step 4. Run the cables over the center truss and attach using cable clips. **DO NOT** tighten cable clips down at this time.

Step 5. Install eye bolts through anchors at intake end, using flat washer and two nuts per each eyebolt. (See Fig. 26.)

Step 6. Attach cables to eye bolts using two cable clamps per cable. NOTE: Secure the clamp u-bolts against the loose end of the cable. (See Fig. 26.)

Step 7. Using eye bolts, tighten cable to remove slack to where the cable is reasonably snug. Tighten both cables the same. **DO NOT** over tighten. Some adjustment can be made after the auger is completely set up.

Step 8. Adjust the truss support to where it is 90° to the tube. Tighten cable clips on top of truss to secure cable in place. Tighten the 5/8" x 1 1/2" long hex head capscrews mounting truss assembly to auger housing.

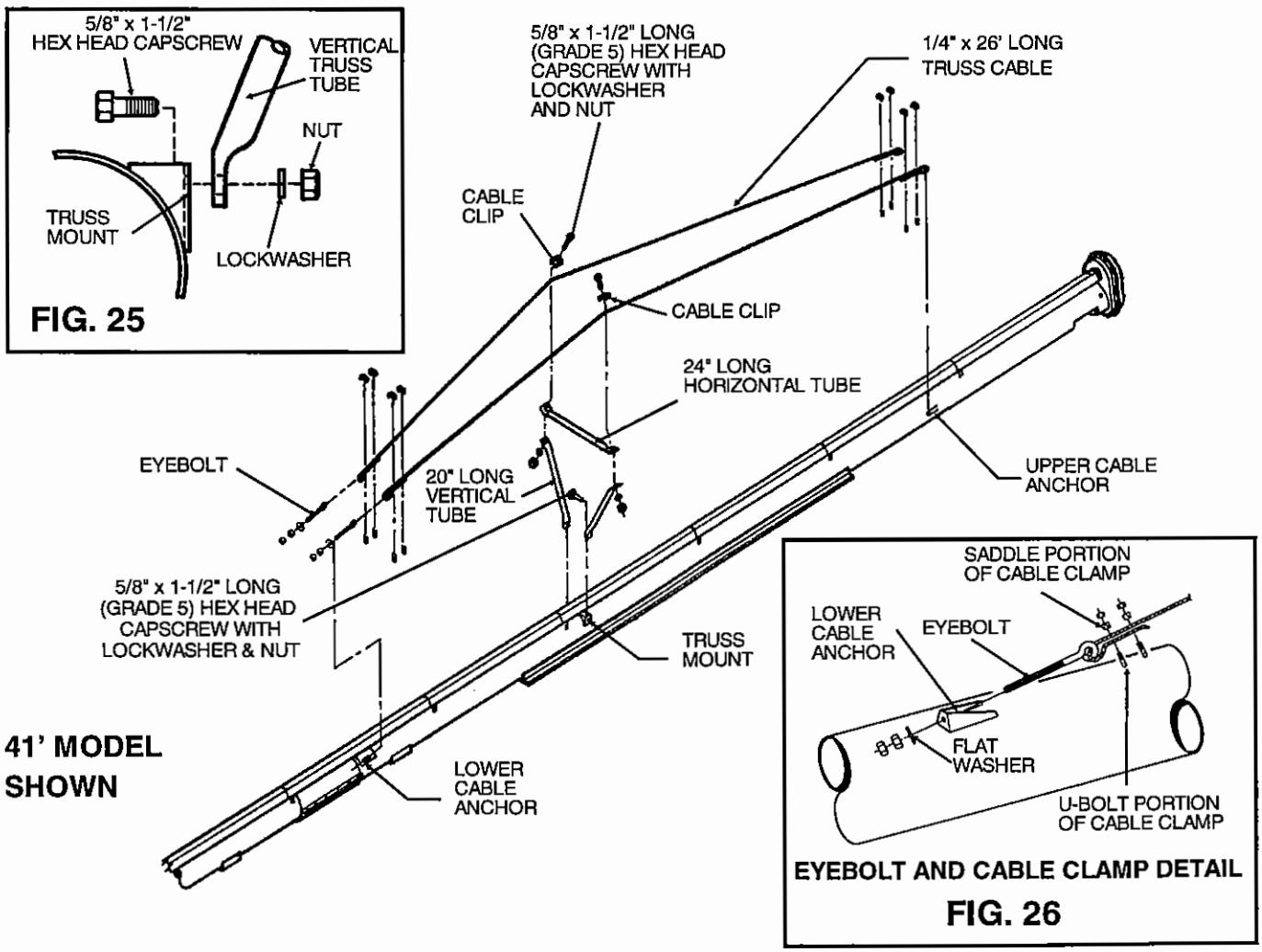

ASSEMBLY INSTRUCTIONS

TOP TRUSS - 47', 53' & 57' AUGER

Step 1. To assemble the bolt-together type truss, attach the two vertical truss tubes to the truss mounts on the auger housing using 5/8" x 9" long (grade 5) hex head capscrew, lockwasher and nut. (See Fig 27.)
To locate the truss mounts on the auger housing, measure from the head end of the auger housing (at the discharge end). It should be 24'-2" back for 47', 53' & 57' models.
Step 2. Attach the truss top crossmember (24" long) to the vertical tubes using 5/8" x 1 1/2" long (grade 5) hex head capscrews, lockwashers and nuts. **DO NOT** tighten at this time.
IMPORTANT: Be sure to slide the hex head capscrews through the cable clamp clips before putting hex head capscrews through the horizontal tube. The hex head capscrews must go through the horizontal tube from the top.
Step 3. Attach cables to upper cable anchors at discharge end using two cable clamps per each cable.
NOTE: Secure the clamps u-bolts against the loose end of the cable.
Step 4. Run the cables over the center truss and attach using cable clips. **DO NOT** tighten cable clips down at this time.
Step 5. Install eye bolts through anchors at intake end, using flat washer and two nuts per each eyebolt. (See Fig. 28.)
Step 6. Attach cables to eye bolts using two cable clamps per cable. NOTE: Secure the clamp u-bolts against the loose end of the cable. (See Fig. 28.)
Step 7. Using eye bolts, tighten cable to remove slack to where the cable is reasonably snug. Tighten both cables the same. **DO NOT** over tighten. Some adjustments can be made after the auger is completely set up.
Step 8. Adjust the truss support to where it is 90° to the tube. Tighten cable clips on top of truss to secure cable in place. Tighten the 5/8" x 9" long hex head capscrew mounting truss assembly to auger housing.

47' MODEL SHOWN
53' AND 57' SIMILAR

UNIT SIZE	CABLE TRUSS LENGTH
47' Models	31'-6"
53' Models	31'-6"
57' Models	38'-0"

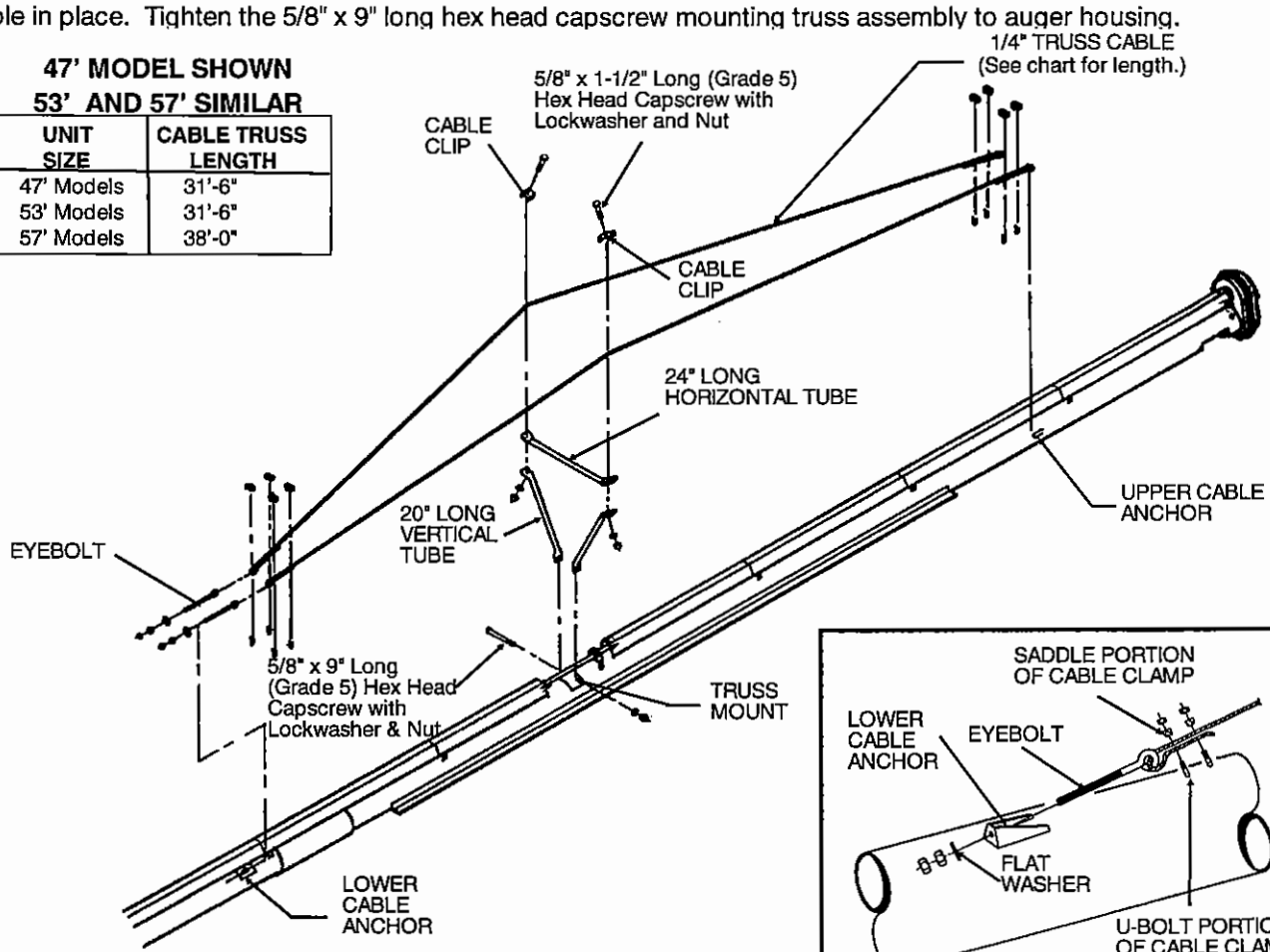

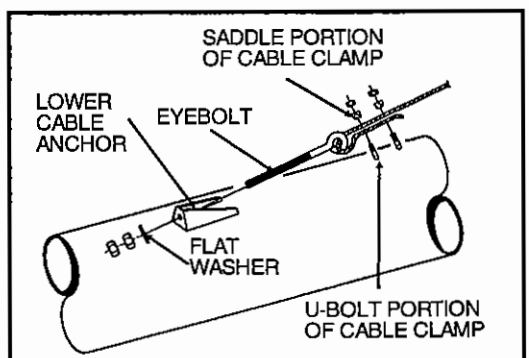

EYEBOLT AND CABLE CLAMP DETAIL

FIG. 28

ASSEMBLY INSTRUCTIONS

TOP TRUSS FOR 59', 62' & 65'

Step 1. Attach the center truss to the auger housing using the 3/4" x 10 1/2" attachment pin and cotter pins provided with the center truss. To locate the truss mount on the auger housing, measure from the head end of the auger housing (discharge end). It should be 24'-2" back on 59' models, 25'-7" back on 62' models, and 30'-0" back on 65' models.
Step 2. Attach cables to the upper cable anchors at the discharge end using two cable clamps per each cable.
NOTE: Secure the clamps u-bolt against the loose end of the cable.
Step 3. Run the cables over the center truss and attach, using a cable clamp to secure cable to the top of the truss.
DO NOT tighten these cable clamps at this time.
Step 4. Install eye bolts through anchors at intake end, using flat washer and two nuts per each eyebolt. See Fig. 30.
Step 5. Attach cables to eye bolts using two cable clamps per each cable. NOTE: Secure the clamp u-bolt against the loose end of the cable. See Fig. 30.
Step 6. Using eye bolts, tighten cable to remove slack to where the cable is reasonably snug. Tighten both cables the same. **DO NOT** over tighten. Some adjustments can be made after the auger is completely set up.
Step 7. Adjust the truss support to where it is 90° to the tube. Tighten cable clamps on top of the truss.

65' MODEL SHOWN (59' & 62' ARE SIMILAR)

UNIT SIZE	CABLE LENGTH
59' MODELS	40'-0"
62' MODELS	42'-0"
65' MODELS	42'-0"

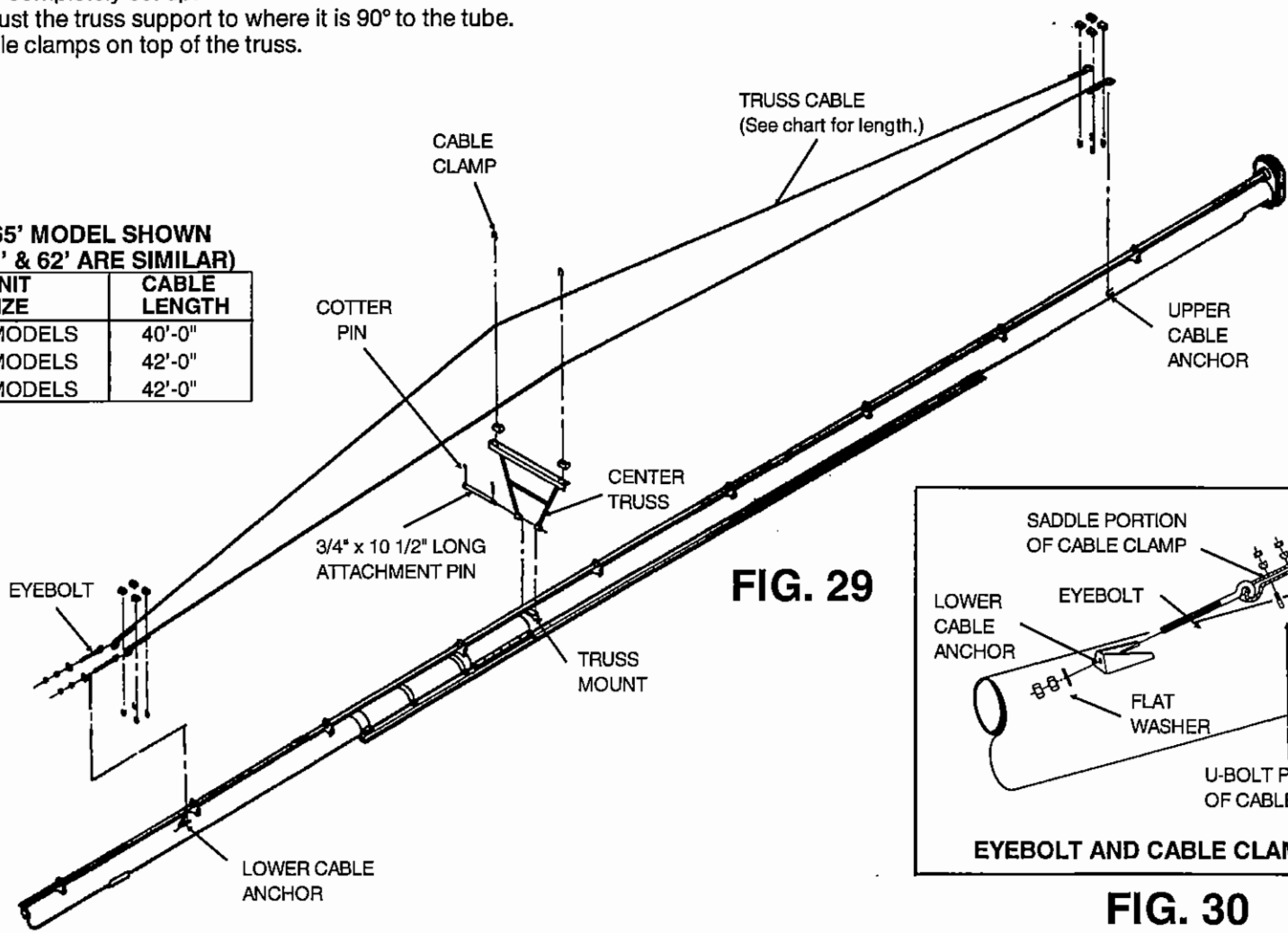

FIG. 29

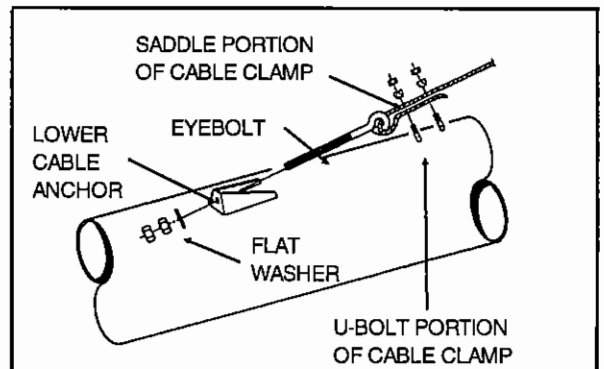

EYEBOLT AND CABLE CLAMP DETAIL

FIG. 30

ASSEMBLY INSTRUCTIONS

TOP & BOTTOM TRUSS FOR 71' MODELS ONLY

FIG. 31

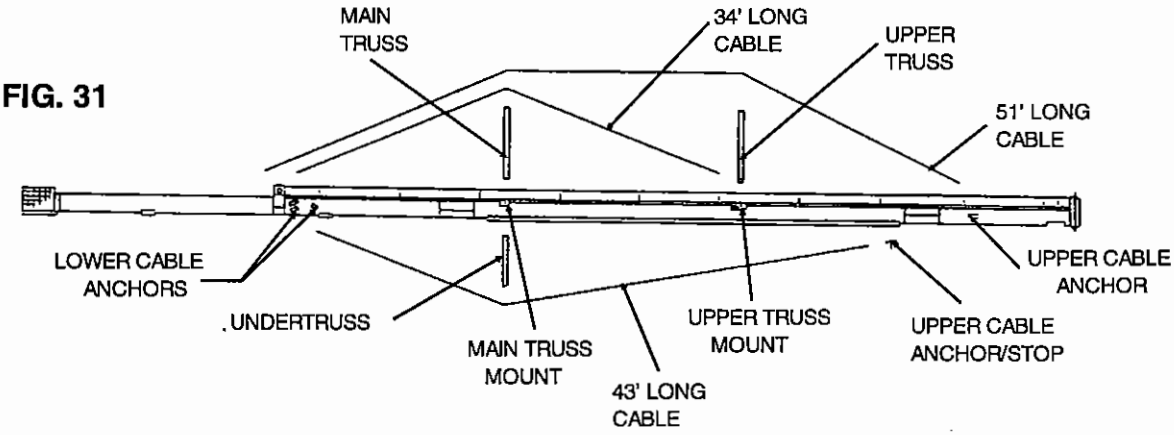

Step 1. Loosely bolt the 39 1/2" and 30" long truss sides to the main truss mount using 5/8" x 2" long (grade 5) hex head capscrews with nylon locknuts. See Figures 31 and 32A.

Step 2. Bolt the short cross brace between the 39 1/2" long truss sides using two 3/8" x 1 1/2" long (grade 5) hex head capscrews and nylon locknuts. Bolt the top crossbrace between the truss sides and the vertical truss tubes using two 3/8" x 1 1/2" long (grade 5) hex head capscrews and nylon locknuts. Bolt the other end of the vertical truss tube to the 30" truss sides using two 3/8" x 1 1/4" long (grade 5) hex head capscrews and nylon locknuts. See Figure 32A. Tighten the hardware holding the truss sides to the truss mount.

Step 3. Loosely bolt 39 1/2" long truss sides to upper truss mount. See Figures 31 and 32B. Bolt the crossbraces between the truss sides with 3/8" x 1 1/4" long (grade 5) head capscrews and nylon locknuts. Tighten the hardware holding the truss sides to truss mount.

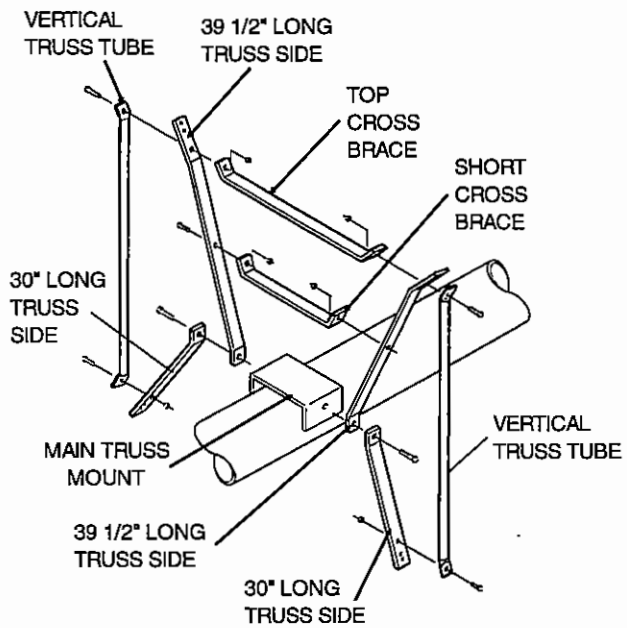

FIG. 32A

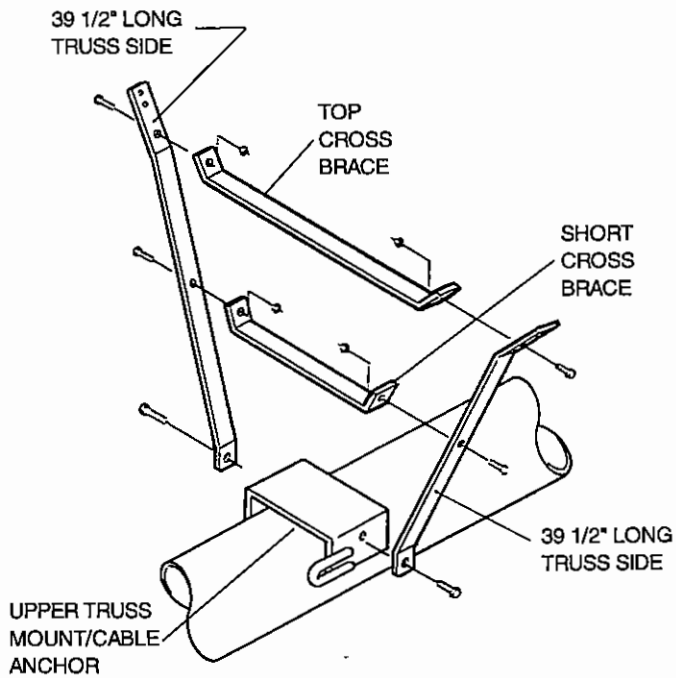

FIG. 32B

ASSEMBLY INSTRUCTIONS

TOP & BOTTOM TRUSS FOR 71' MODELS ONLY
TRUSS CABLE RIGGING

Step 4. Install eyebolts into the six lower cable anchors with eyes toward discharge end of auger. Use two nuts on each eyebolt. See Figure 33A.

Step 5. Before the upper cable anchor/stop can be attached, the undercarriage slide must be installed on the track. See Figure 33B. To accomplish this, lift the auger assembly a few feet by lifting at a point near the center of the auger with a chain hoist or other safe, suitable means. DO NOT lift the entire weight of the auger from the extreme end. DO NOT use drive shaft to lift auger. Use a sling completely around auger housing assembly for lifting. Install the undercarriage slide onto the track from the discharge end. Be sure the slide is installed on the track so that it cannot be removed from the track after the cable anchor/stop has been attached.

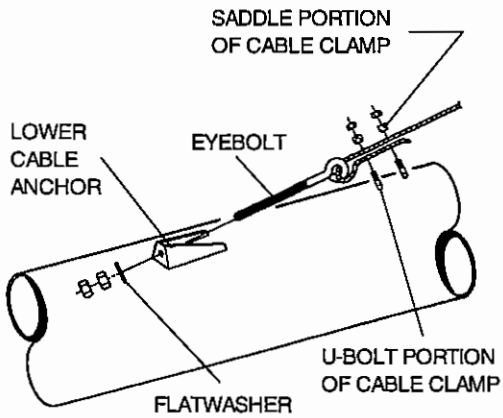

FIG. 33A

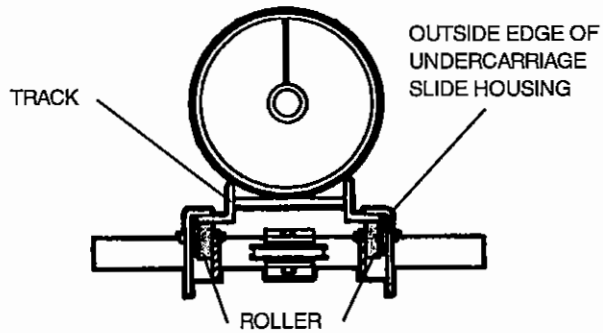

FIG. 33B

Step 6. Attach cable anchor/stop to upper end of track. See Figures 31 and 34.

Step 7. Attach truss cables as shown in Figure 31 to six upper cable anchors using two cable clamps per each cable. NOTE: Secure clamp with u-bolt against the loose end of the cable. See also Figure 34.

Step 8. Run the cables over the truss crossbraces, then toward the intake end of the auger. See Figure 31.

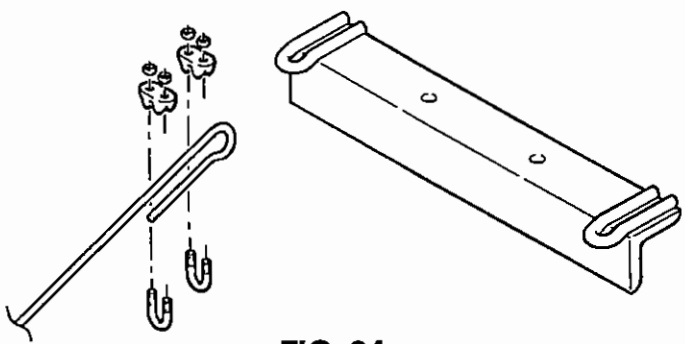

FIG. 34

ASSEMBLY INSTRUCTIONS

TOP & BOTTOM TRUSS FOR 71' MODELS ONLY
TRUSS CABLE RIGGING

Step 9. Attach the cables to the truss sides. On the upper truss, use 3/8" cable clamps to fasten the cables to truss sides. See Figure 34A. On the main truss, use a 3/8" u-bolt and two locknuts to hold two cables to each truss side. See Figure 34B. On the undertruss, use 3/8" cable clamps. See Figure 34C.

IMPORTANT: DO NOT tighten the clamps and u-bolts at this time. The cables must be able to freely slide through the clamps or u-bolts while taking up the slack in step 11.

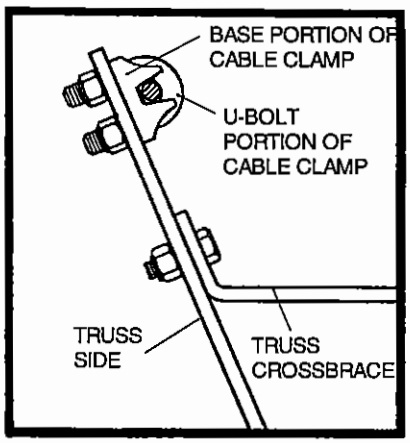

FIG. 34A

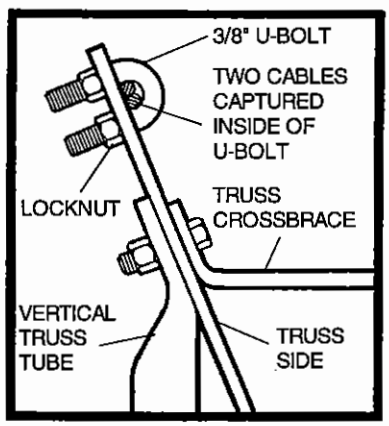

FIG. 34B

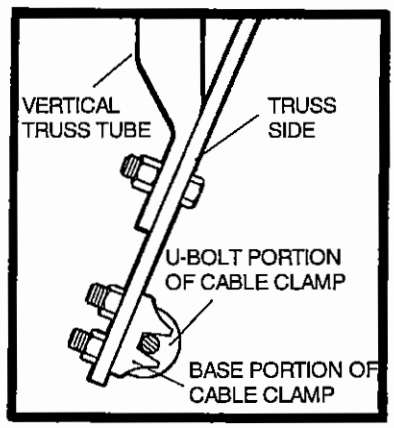

FIG. 34C

Step 10. Attach truss cables to eyebolts (from Step 4) using two 1/4" cable clamps per each cable.
NOTE: Secure clamp with u-bolt against loose end of cable. See Figure 33A.

Step 11. Using eyebolts, tighten cables to remove slack so that cables are reasonably snug. Tighten pairs of cables equally. DO NOT OVERTIGHTEN. Sight down the tube to make sure all sections are straight. Some adjustment can be made after auger is completely set up.

Step 12. Tighten the 3/8" cable clamps and u-bolts holding the cable to the truss sides.

ASSEMBLY INSTRUCTIONS

HUB AND SPINDLE TO UNDERCARRIAGE ASSEMBLY

The 4 bolt hubs, bearings, seals and spindles are assembled at the factory and are pressure packed with grease at that time.

Slide the 4 bolt hub and spindle assembly into the undercarriage axle and secure with 1/2" (grade 5) hex head capscrew and nylon locknut. See Fig 35.

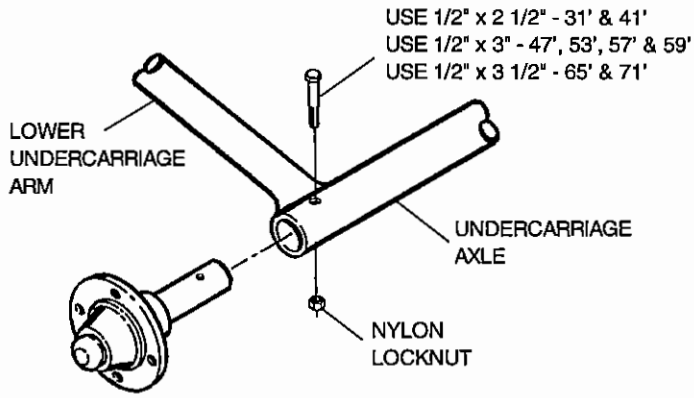

4 BOLT HUB AND SPINDLE ASSEMBLY
FIG. 35

UNDERCARRIAGE SLIDE TO TRACK ASSEMBLY

Lift the auger assembly a few feet by lifting at a point near the center of the auger with a chain hoist or other safe, suitable means. **DO NOT** lift the entire weight of the auger from the extreme end. **DO NOT** use drive shaft to lift auger. Use a sling completely around auger housing assembly for lifting. Install the undercarriage slide onto the track from the discharge end. Be sure the undercarriage is installed on the track in a manner whereby it cannot be removed from the track after the stop has been installed. See Fig. 36.

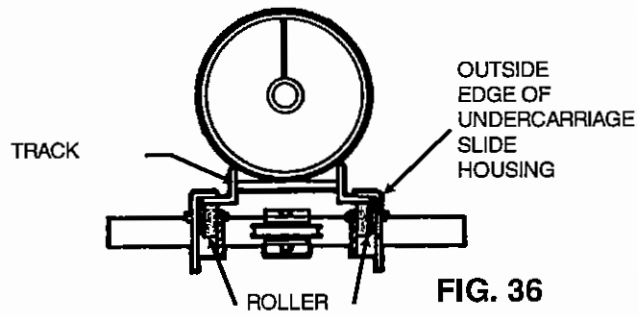

FIG. 36

UNDERCARRIAGE STOP TO TRACK ASSEMBLY

A stop must be bolted on or near the discharge end of the undercarriage track on all lengths of augers. Use two 1/2" x 1 1/2" long (grade 5) hex head capscrews, lock washers and nuts to secure the stop to the track angle.

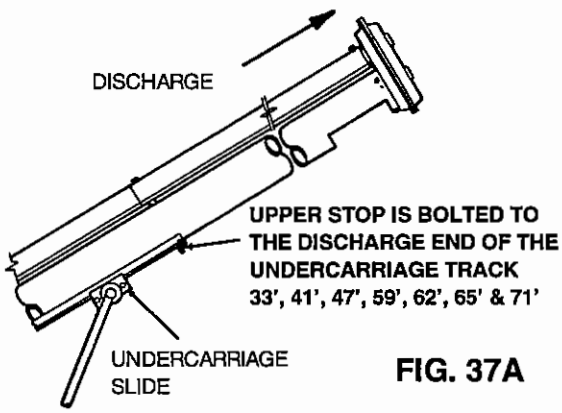

FIG. 37A

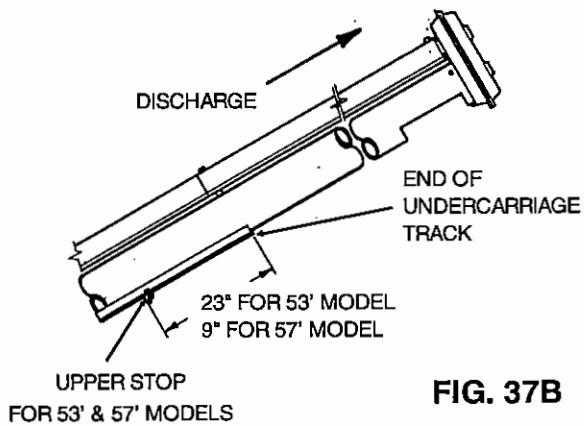

FIG. 37B

UNDERCARRIAGE SLIDE STOP ASSEMBLY FOR 47' ONLY

On the 47' models only, a stop **MUST** be bolted on the intake end of the undercarriage track, 28" from the end. Use two 1/2" x 1 1/2" long (grade 5) hex head capscrews, lockwashers and nuts. See Fig. 38.

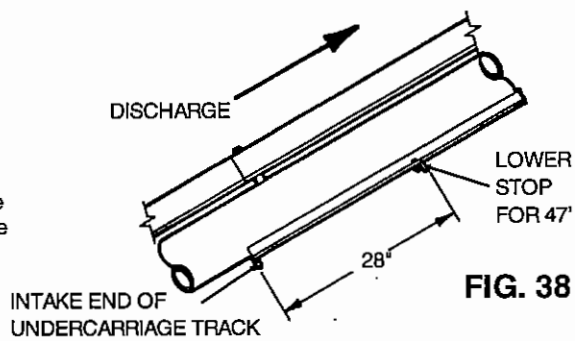

FIG. 38

ASSEMBLY INSTRUCTIONS

LOWER UNDERCARRIAGE ARMS TO AUGER HOUSING ASSEMBLY FOR 33', 41', 47', 53', 59', 62' & 65' MODELS

Lift the auger tube assembly high enough to attach the lower arm of undercarriage to auger housing assembly. Keep undercarriage slide against the upper undercarriage stop by securing temporarily with chain. Bolt the lower arm of the undercarriage to mount welded on lower auger housing, using four 1/2" x 1 1/4" long (grade 5) hex head capscrews and nylon locknuts. See Fig. 39.

MODEL SIZE	A	
33'	7'-10"	(94")
41'	9'-3"	(111")
47'	10'-11"	(131")
53'	13'-1"	(157")
57'	13'-8"	(164")
59'	13'-9"	(165")
62'	14'-3"	(171")
65'	15'-9"	(189")

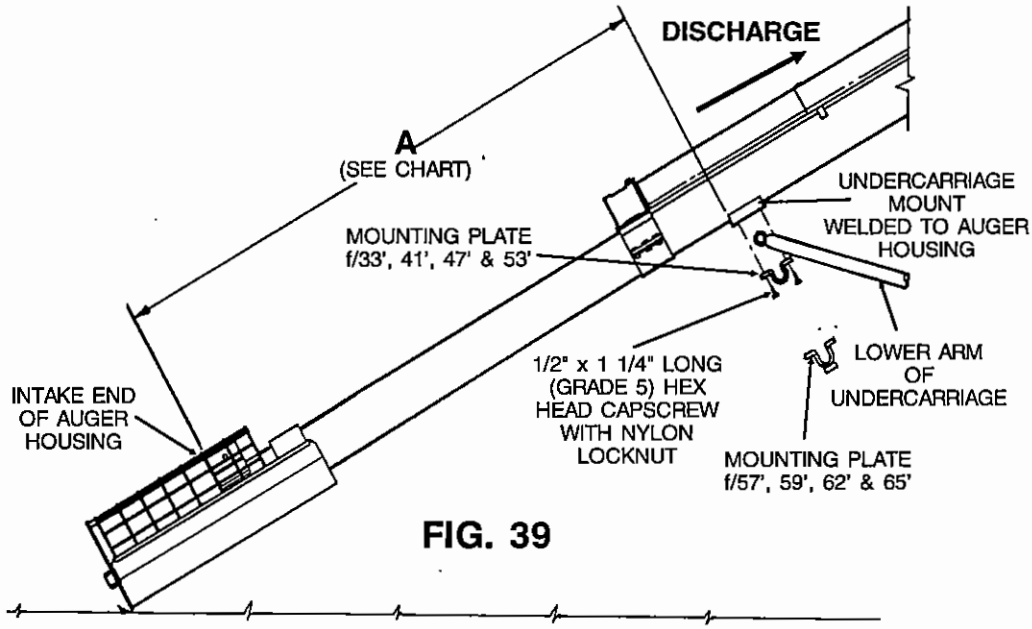

FIG. 39

IMPORTANT - On 57', 59', 62' & 65' MODELS
Continue to support the auger with the lifting means after the undercarriage has been attached and until the bottom truss is completely installed and the truss cable is tightened. See Bottom Truss Assembly Instructions on page 33 for 57' & 59' models or page 34 for 62' and 65' models.

FOR 8" x 71' MODEL ONLY

Lift the auger housing assembly high enough to attach the lower arm of undercarriage to auger housing assembly. Keep undercarriage slide against the upper undercarriage stop by securing temporarily with chain. Attach lower arm of undercarriage to auger housing assembly, using four 5/8" x 1 1/2" long (grade 5) hex head capscrews and nylon locknuts. See Fig. 40.

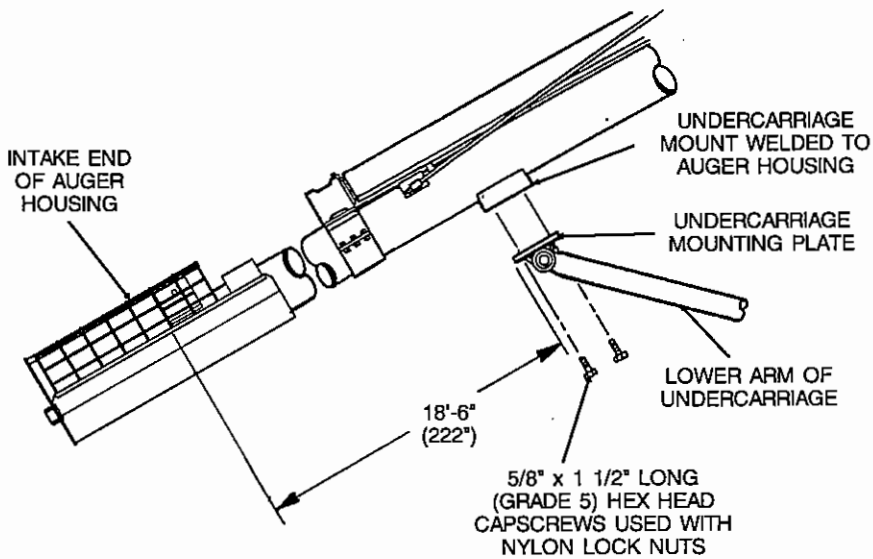

FIG. 40

BOTTOM TRUSS FOR 57' AND 59' ONLY

Step 1. Install center stand-off support to bottom side of auger housing with a half band using six 5/16" x 1 1/2" long (grade 5) hex head capscrews and nylon locknuts. See Detail A.
Step 2. Attach 1/4" cable to upper anchor. (On 57' model, use 38'-0" long cable and on 59' models, use 40'-0" long cable.) Using an overhand knot and one cable clamp, secure the clamp u-bolt against the loose end of the cable. See Detail B.
Step 3. Install eyebolt in lower anchor pipe on undercarriage mount. Use 1/2" flat washer and two nuts. See Detail C.
Step 4. Run cable through pipe on center stand-off and fasten to eyebolt in lower anchor. Secure cable with an overhand knot and one cable clamp, attach the clamp u-bolt against the loose end of the cable.
Step 5. Use eyebolt to tighten cable to remove "sag" from auger assembly. **DO NOT** over tighten.
Step 6. After truss is tight, the support used to lift the auger can be removed and auger will be able to stand unsupported.

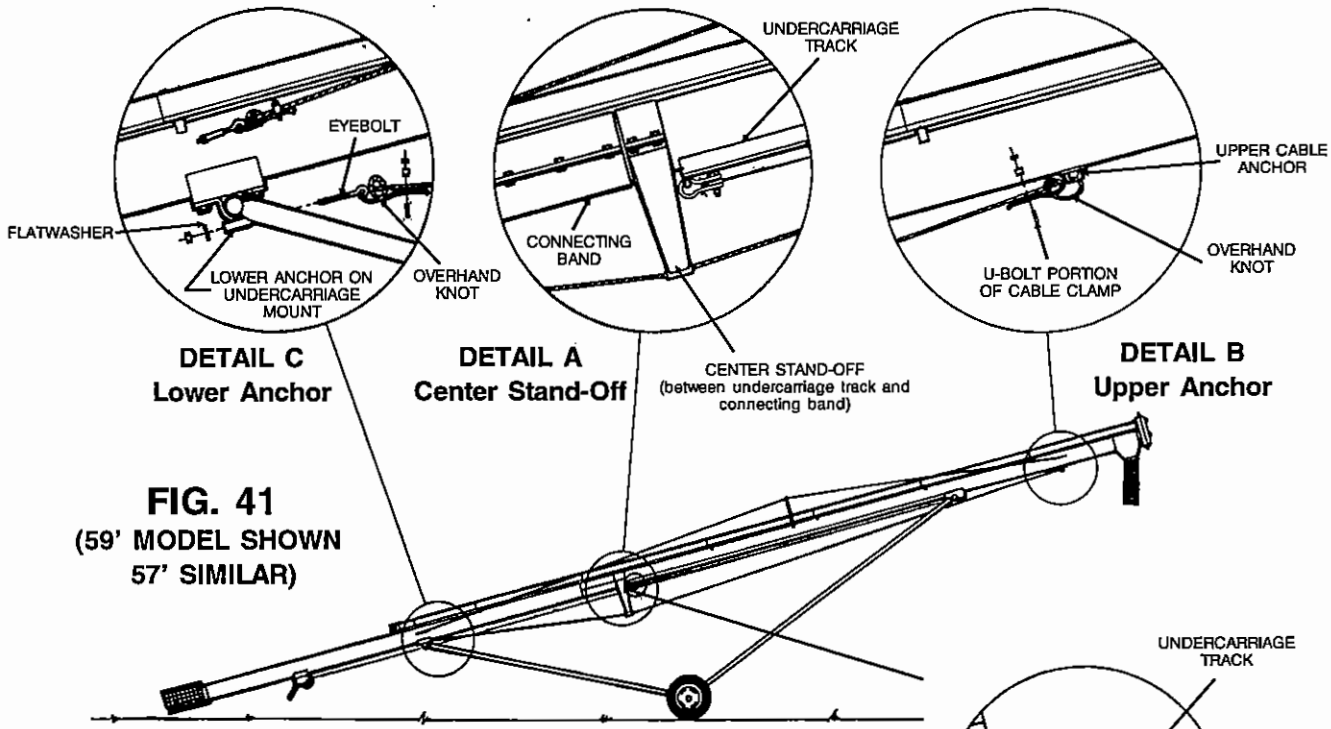

FIG. 41
(59' MODEL SHOWN 57' SIMILAR)

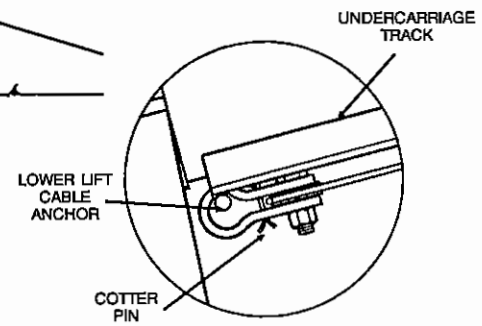

CABLE PULLEY AND CLEVIS DETAIL D

NOTE: Install the cable pulley and clevis assembly to the lower lift cable anchor on the undercarriage track. See Fig. 42.

FIG. 42

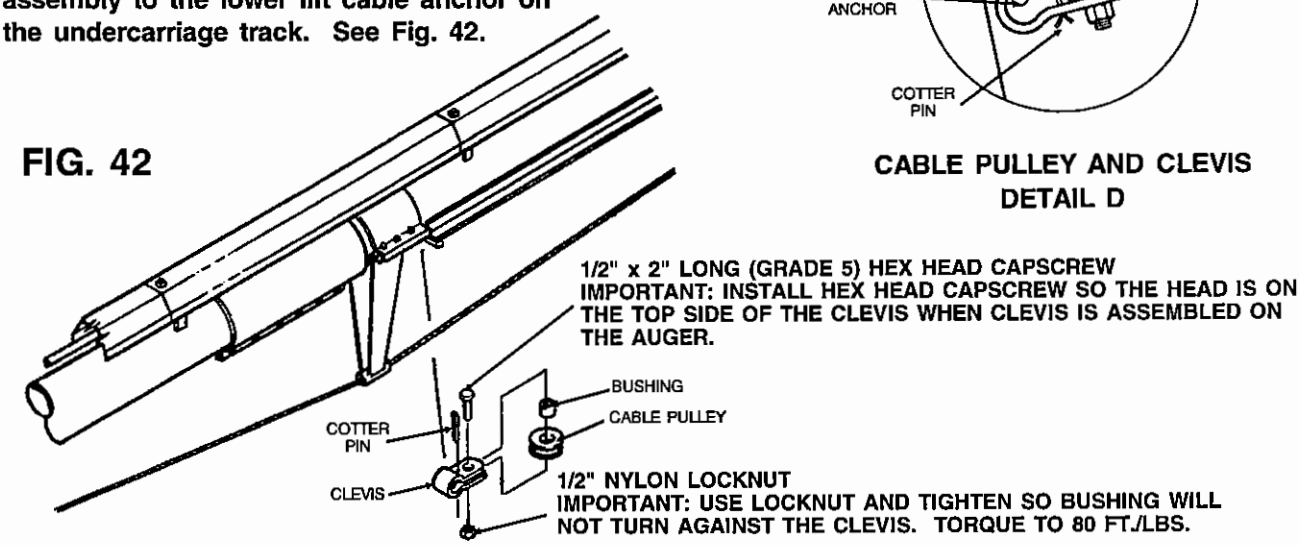

ASSEMBLY INSTRUCTIONS

BOTTOM TRUSS FOR 62' & 65'

Step 1. Install center stand-off support to bottom side of undercarriage track. See Fig. 42 for center stand-off location. Use six 3/8" x 1 1/2" long (grade 5) hex head capscrews, flat washers, lockwashers and nuts to secure center stand-off support to undercarriage track. NOTE: Use a flat washer on the top and the bottom of each bolt.

Step 2. Attach bottom truss cable to upper anchor. See Detail B. Use an overhand knot and one cable clamp. Secure the clamp u-bolt against the loose end of the cable.

Step 3. Install eyebolt in lower anchor pipe on undercarriage mount and secure with 1/2" flatwasher and two nuts. See Detail C.

Step 4. Run cable through pipe on center stand-off and fasten to eyebolt in lower anchor. Secure cable with an overhand knot and one cable clamp. Attach the clamp u-bolt against the loose end of the cable.

Step 5. Use eyebolt to tighten cable to remove "sag" from auger assembly. **DO NOT** overtighten.

Step 6. After truss is tight, the support used to lift the auger can be removed and auger will be able to stand unsupported.

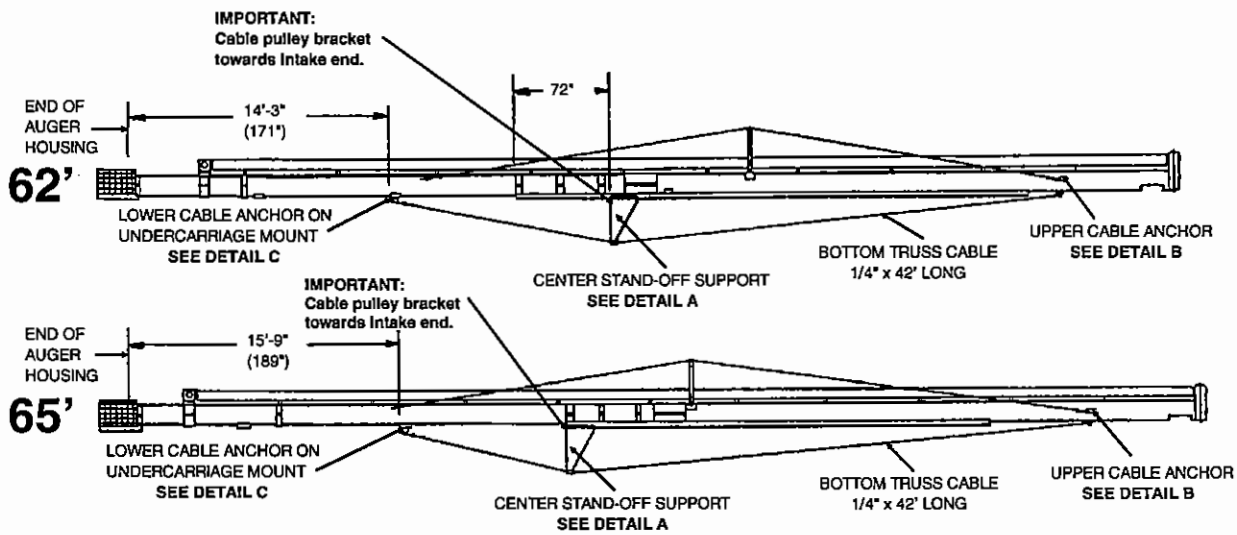

FIG. 42

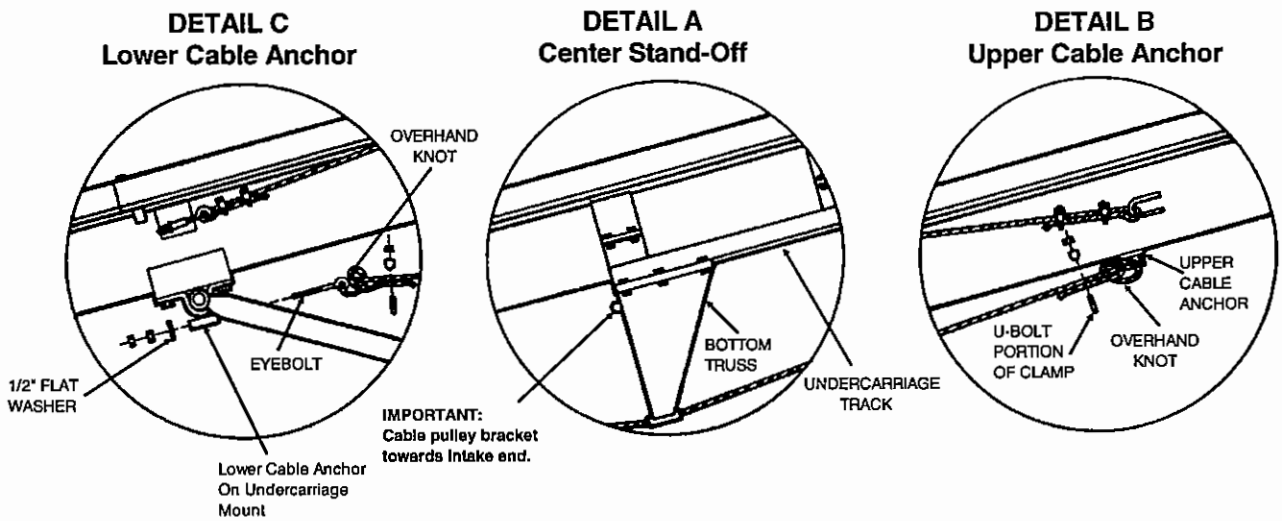

ASSEMBLY INSTRUCTIONS

WINCH HANDLE TO WINCH BODY ASSEMBLY

Align slot of handle with flat portion of winch pinion shaft. Use hex nut to hold handle in place and tighten securely. See Fig. 43.. For additional winch information. follow the instructions and precautions listed in the material supplied with the winch from the manufacturer.

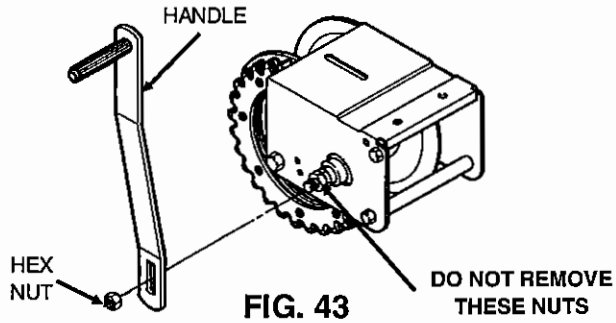

FIG. 43

LIFT CABLE TO WINCH DRUM ASSEMBLY

On 33', 41', 47', 53', 57', 59', 62' and 65' Models, attach 1/4" lift cable to winch drum so cable will wrap under winch drum, when turning winch handle in clockwise direction.

On 71' Models, attach 1/4" lift cable to winch drum so cable will wrap over winch drum, when turning winch handle in lockwise direction.

From inside of drum, insert the cable through one round hole in the drum side, until it extends 1" past the two square holes. Next clamp the cable to the outside of the drum with the cable keeper, using two 3/16" x 3/4" carriage bolts, lock washers and nuts. Be sure that the carriage bolt heads are on the inside of the drum. See Fig. 44.

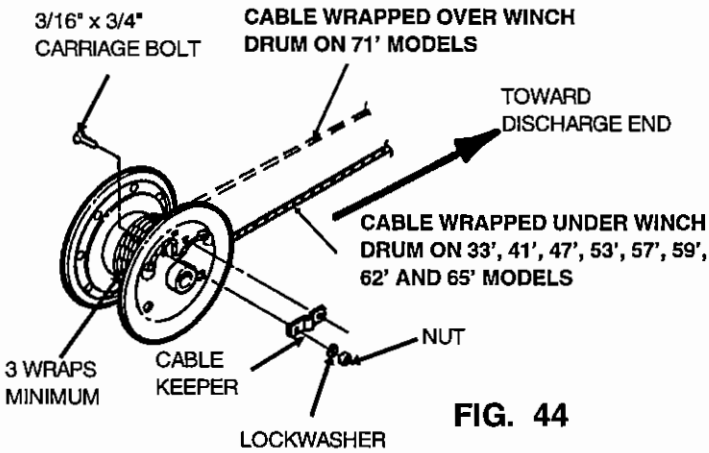

FIG. 44

Never fully extend the cable and always keep three complete turns of cable around winch drum.

WINCH TO WINCH MOUNT ON AUGER HOUSING ASSEMBLY

Bolt winch assembly to mount so the winch drum is towards the auger discharge. Use three 3/8" x 1" long (grade 5) flat washers, lock washers and nuts to attach winch to mount. See Fig. 45.

WINCH LOCATION

MODEL SIZE	A
33'	4'-4" (52")
41'	4'-4" (52")
47'	5'-9" (69")
53'	6'-2" (74")
57'	6'-2" (74")
59'	6'-2" (74")
62'	6'-2" (74")
65'	6'-2" (74")
71'	6'-2" (74")

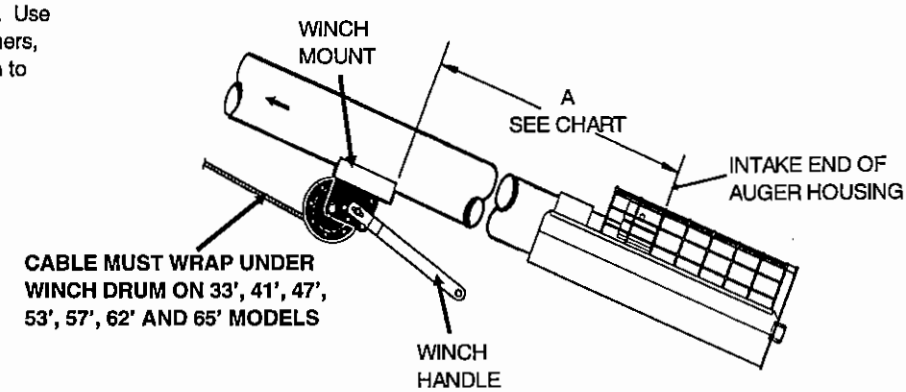

FIG. 45

ASSEMBLY INSTRUCTIONS

LIFT CABLE RIGGING

Step 1. Rig the lift cable around the cable pulleys. Different lengths of auger will require different rigging. Use the chart to determine the proper rigging pattern for your model of auger.

Step 2. Install lift cable to undercarriage slide using two 1/4" cable clamp. **NOTE:** Secure the clamps u-bolt against the loose end of the cable.

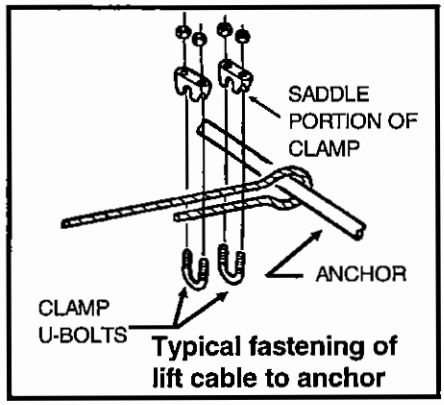

Typical fastening of lift cable to anchor

CABLE LENGTHS	
MODEL	CABLE
33'	24'
41'	44'
47'	51'
53'	57'
57'	82'
59'	84'
62'	93'
65'	98'
71'	115'

FIG. 46

33'

41', 47' & 53'

57' & 59'

62', 65' & 71'

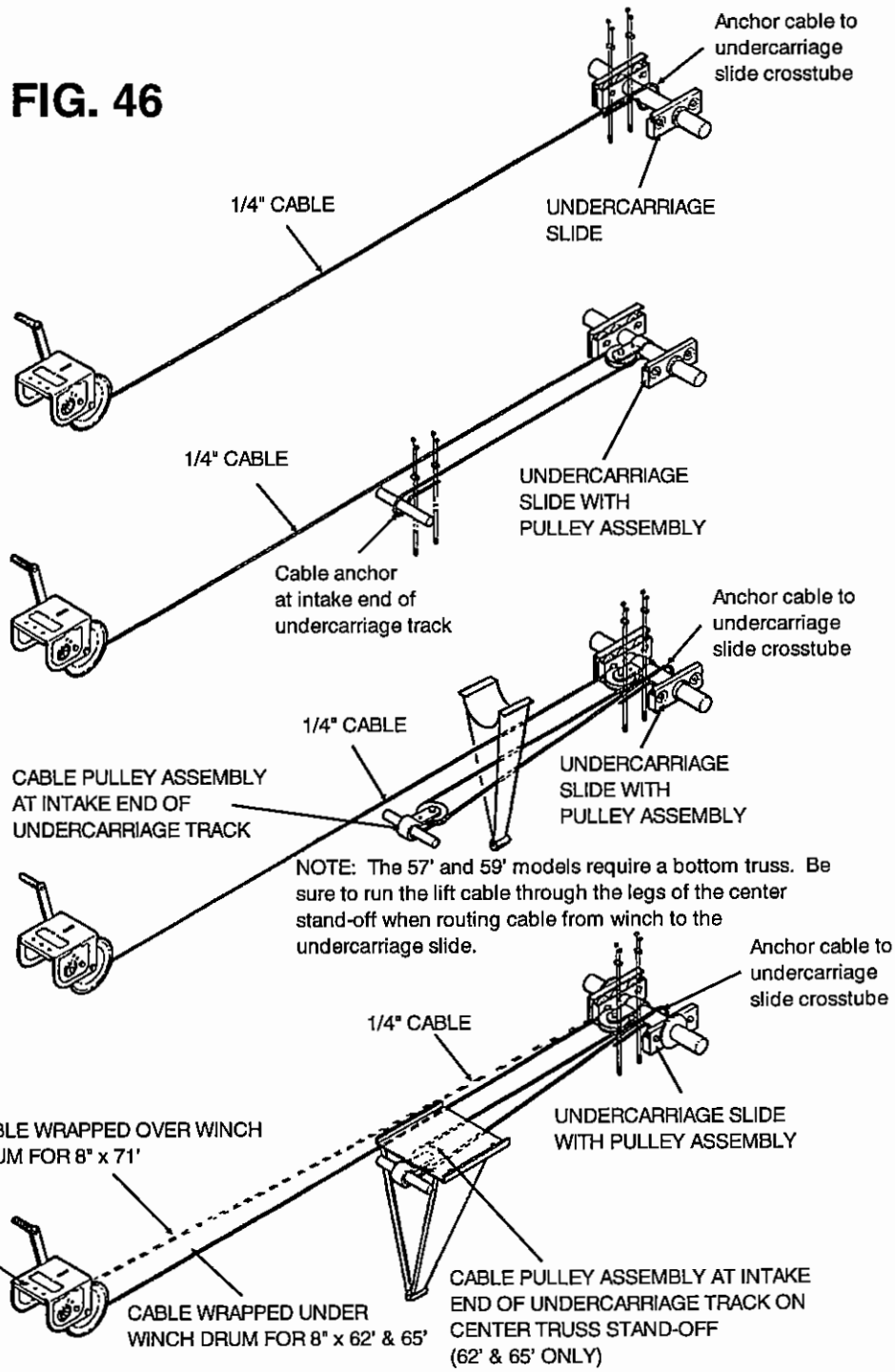

ASSEMBLY INSTRUCTIONS

DIRECT P.T.O. DRIVE ASSEMBLY

NOTE: P.T.O. Drives can be driven from either the right or left hand side of the auger. ALL ILLUSTRATIONS SHOW GEARBOX IN LEFT DRIVE POSITION.

To change the drive for a right hand drive, turn the gearbox over and bolt the other side to the gearbox mount. The vent plug in the gearbox must be put on the top side of the box. The PTO driveline support is installed on the other side of the auger housing.

Step 1. Attach PTO driveline to gearbox, using 1/4" x 1 1/2" long square drive key.
IMPORTANT: For setscrew to be properly engaged on the gearbox input shaft, the gearbox input shaft **MUST** be slid into the driveline yoke until the setscrew will sit in flat portion of gearbox input shaft. See Fig. 47. **DO NOT** extend the gearbox input shaft beyond the inside end of the yoke.

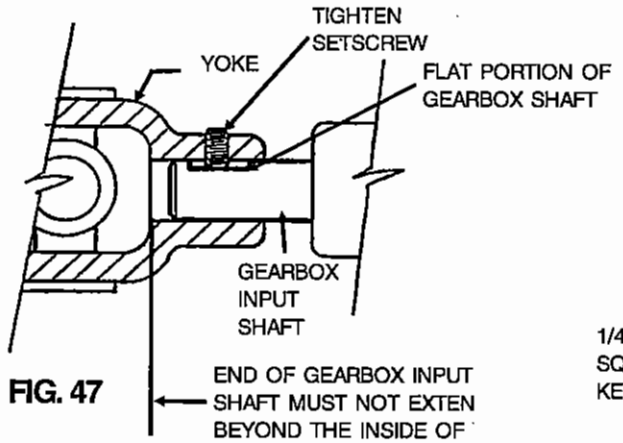

FIG. 47

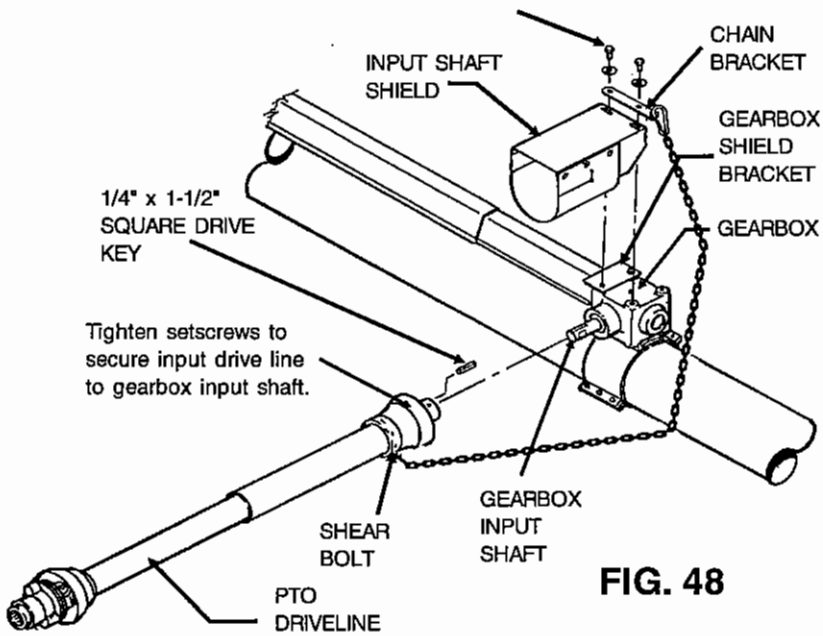

FIG. 48

Step 2. Remove 3/8" x 3/4" long (grade 5) hex head capscrews that hold the gearbox shield bracket to the top of the gearbox.

Step 3. Slide input shaft shield over end of PTO driveline, then install the shield and chain bracket onto the gearbox shield bracket. Replace the 3/8" x 3/4" long (grade 5) hex head capscrews and lockwashers. Attach retaining chain for PTO to chain bracket.

Step 4. Place the PTO driveline support 46" up the auger housing from center of gearbox and attach in place using a halfband and two 5/16" x 1 1/2" long (grade 5) hex head capscrews and nuts. Be sure support is not installed where it is covering a safety sign. Position PTO driveline support to the auger so that PTO driveline is parallel with the drive shaft cover. See Fig. 49 on page 38.

Step 5. Install retaining pin by slipping the short bent end of pin through hole in PTO driveline support and through slot of other side. Allow long end of pin to rotate down. This will secure pin in place. Set PTO driveline into the support to be sure support is installed properly. See Fig. 49 on page 38.

NOTE: The PTO driveline is equipped with a shear bolt at the auger connection. The shear bolt protects the auger from damage if the auger becomes plugged or subjected to high loads. It is important to use the correct replacement bolt of the proper size and strength to insure that the shear device will protect the auger and operator.

Order replacement shear bolt, Part No. 33046 - 5/16"- 18 x 1" long Grade 5 bolt.

ASSEMBLY INSTRUCTIONS

DIRECT P.T.O. DRIVE ASSEMBLY - CONT.

IMPORTANT:
DO NOT INSTALL THE SUPPORT WHERE THE BANDS WILL COVER ANY SAFETY SIGNS ON THE AUGER HOUSING.

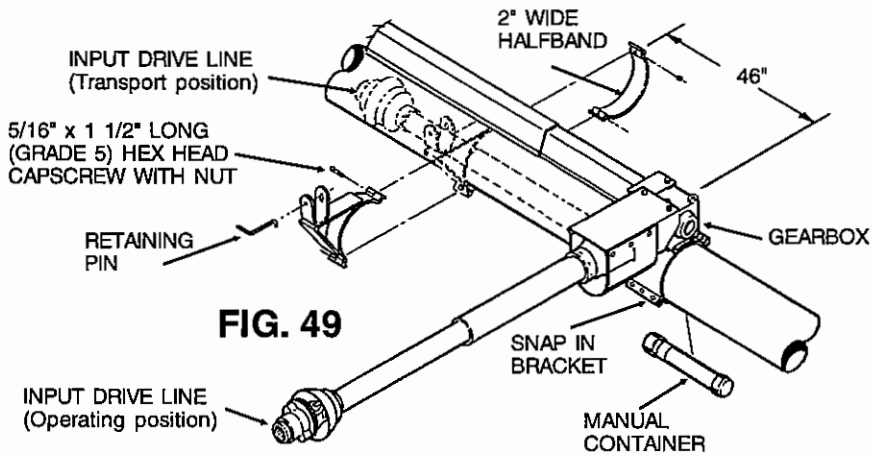

FIG. 49

TOP MOUNTED ELECTRIC MOTOR DRIVE ASSEMBLY

Assemble electric motor mount as shown in Fig. 50. See page 9 in the operating procedure portion of this manual for motor size and motor sheave size. NOTE: Motor sheave is not furnished with drive kit.

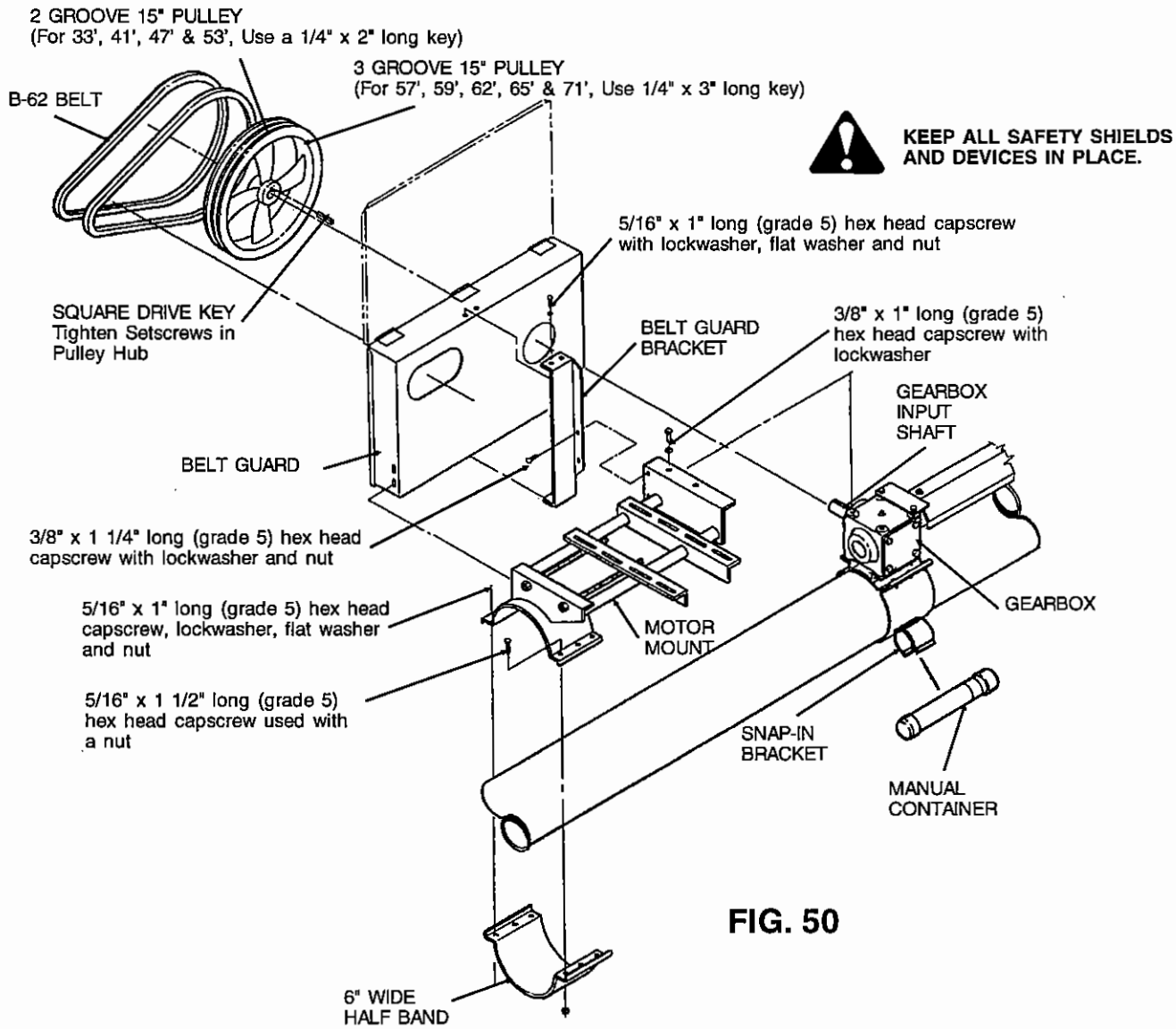

FIG. 50

ASSEMBLY INSTRUCTIONS

OPERATOR'S MANUAL CONTAINER

A plastic container with removable caps is provided to store a copy of the operator's manual on the auger.

A snap-in bracket is used to attach the container to the auger housing. This bracket is positioned in different locations depending on the drive used to power the auger.

Direct PTO Drive - The snap-in bracket is welded to the bottom halfband used to fasten the gearbox mount to the auger housing. See Fig. 49 on page 38.

Top Mounted Electric Drive - The snap-in bracket is welded to the bottom halfband used to fasten the gearbox mount to the auger housing. See Fig. 50 on page 38.
Note: On 41' models the snap-in bracket is welded to a halfband which is mounted to the auger housing 45" from intake end of the auger.

TO DEALER/ASSEMBLER NOTICE

The assembly of the auger is complete if all the applicable assembly steps in this manual have been followed.

Before delivery to the owner it is a good practice to check the following:
a. Be sure all safety shields and devices are installed properly.
b. Check all safety decals to see if they are clean and readable. If any are missing, damaged, painted over, etc., replace them. See page P-1 and P-2 for safety sign location. Decals may be obtained from your dealer, distributor or ordered from the factory.
c. Check all bolts and fasteners to see they are tightened and secured properly.
d. Check that the Operator's Manual container (with Operator's Manual inside) is installed in its holder located on the auger housing.

Deliver this Operator's Manual to the owner along with the auger.

TO THE OWNER

Use this Assembly Section as a reference to determine that the auger is assembled properly.

Make sure an Operator's Manual is delivered along with the auger. Anyone who will operate or work around a portable auger shall first read the Operator's Manual! Failure to read the manual and its safety instructions is a misuse of the equipment.

PARTS LIST

SAFETY SIGNS & DECALS

Check all safety signs and replace any that are worn, missing or illegible. The safety sign locations are shown below. Copies of the Safety Signs are shown on page P-2 and P-3. Safety Signs may be obtained from your dealer or ordered from the factory.

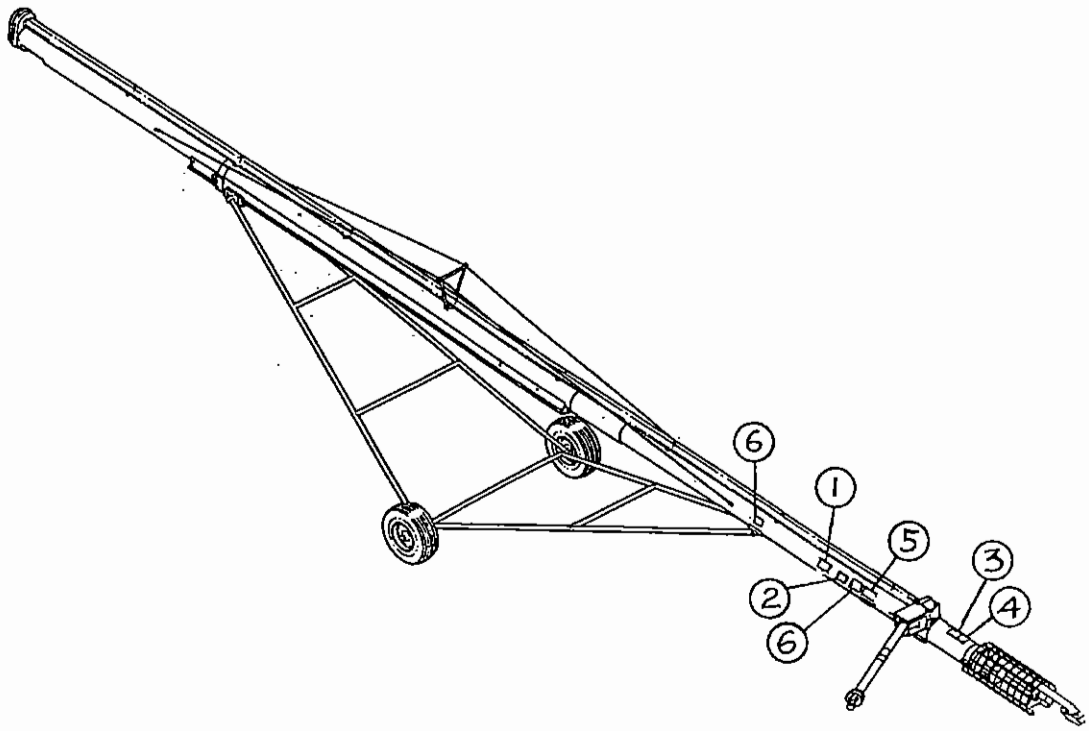

REF. NO.	PART NO.	QTY.	DESCRIPTION	SIZE
1	1025077	1	**CAUTION - GENERAL** (On Main Auger Housing)	88mm x 168mm
2	1025078	1	**DANGER - POWER LINES** (On Main Auger Housing)	88mm x 168mm
3	1025079	1	**DANGER - UPENDING HAZARD** (On Main Auger Housing)	88mm x 168mm
4	1025080	1	**DANGER - ROTATING AUGER** (On Main Auger Housing)	88mm x 168mm
5	1025081	1	**DANGER - ROTATING DRIVELINE** (On Main Auger Housing)	88mm x 168mm
6	1025082	2	**DANGER - ROTATING SHAFT** (On Main Auger Housing)	88mm x 168mm

***ONLY USED ON AUGERS WITH OPTIONAL INTERNAL BEARINGS**

PARTS LIST

SAFETY SIGNS AND DECALS

1

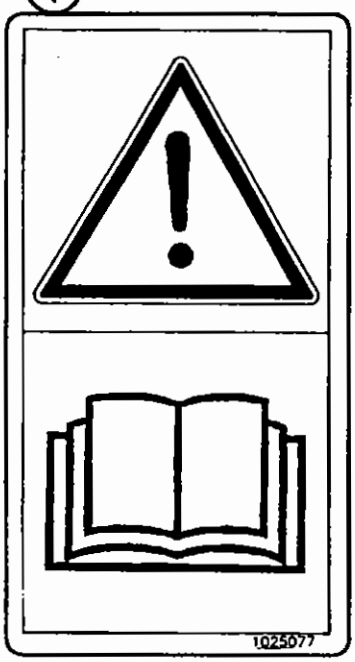

2

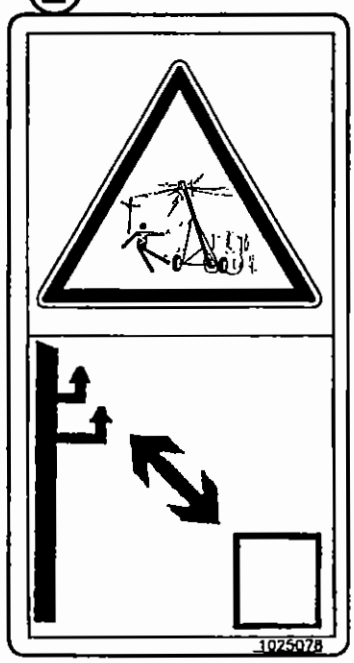

3

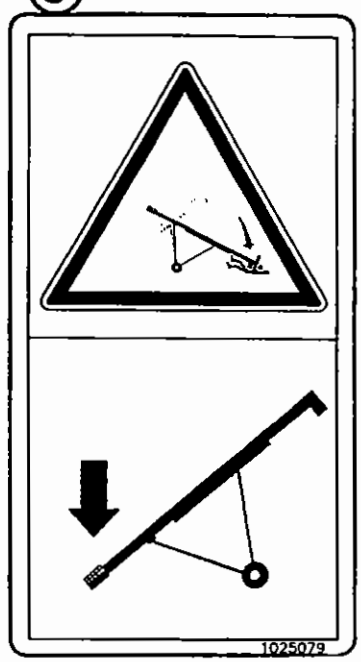

4

5

6

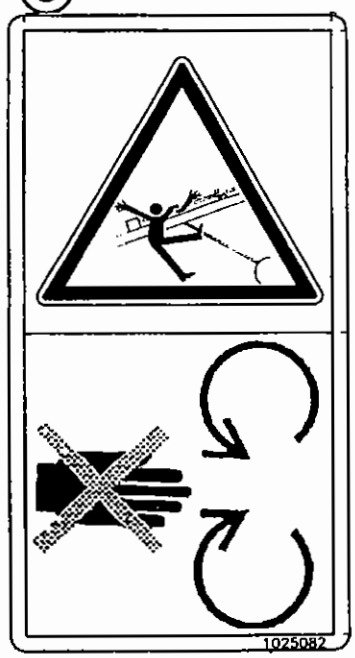

PARTS LIST

MAIN AUGER COMPONENTS

ENCLOSED HEAD DRIVE

REF. NO.	DESCRIPTION	STANDARD DRIVE COMPLETE PART NO. 631368 RATIO 1 TO 1 PART NO.	OPTIONAL REDUCTION DRIVE COMPLETE PART NO. 1012352 RATIO 2 TO 1 PART NO.
1	Aluminum Casting	1001439	1001439
2	Aluminum Casting - Cover	842033-2	842033-2
3	# 60 Roller Chain - 38 pitch	842064	N/A
3	# 60 Roller Chain - 39 pitch	N/A	1012351
4	Gasket	842035	842035
5	1/4" Plug	020009	020009
6	1" Bearing Cone (Timken No. 07100)	835174	835174
7	1 1/4" Bearing Cone (Timken No. 15123)	106322	106322
8	1 1/4" Bore Sprocket - 19 tooth	40039	N/A
8	1 1/4" Bore Sprocket - 26 tooth	N/A	1012345
9	Stub Shaft 1-1/4"	553629	553629
10	Stub Shaft 1"	553628	553628
11	1" Bore Sprocket - 19 tooth	835176-1	N/A
11	1" Bore Sprocket - 13 tooth	N/A	1012344
12	5/16" x 1" HHCS	33046	33046
13	5/16" Lockwasher	33144	33144
14	3/8" x 2 1/2" Roll Pin	33203	33203
15	Shaft Seal - 1 1/4"	835168	835168
16	Shaft Seal - 1"	835169	835169
17	Key, 1/4" x 1"	4020A1	4020A1
18	Decal Notice Oil Level	1001131	1001131
19	1" Bearing Cup (Timken No. 07204)	835175	835175
20	1 1/4" Bearing Cup (Timken No. 15245)	106323	106323
21	1" Bearing Spacer	4542	4542
22	3/8" Pipe Plug - Vented	1001438	1001438
*23	Drive Shaft Mounting Clip	553630	553630
*24	Self-Tapping Screw	33183	33183
*25	4" long Coupler	1002382	1002382
*26	Key 1/4" x 1 1/2"	8371C	8371C
27	Decal - 2 to 1 Ratio	N/A	1012528

*These items are NOT part of the complete assembly. They are sold separately.

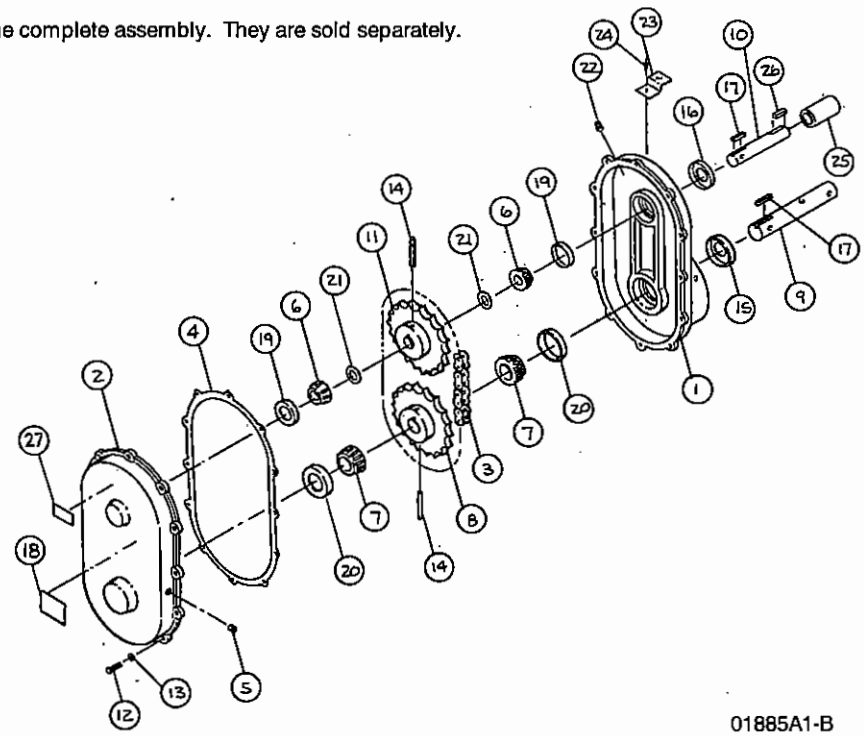

01885A1-B A0005633

PARTS LIST

MAIN AUGER COMPONENTS

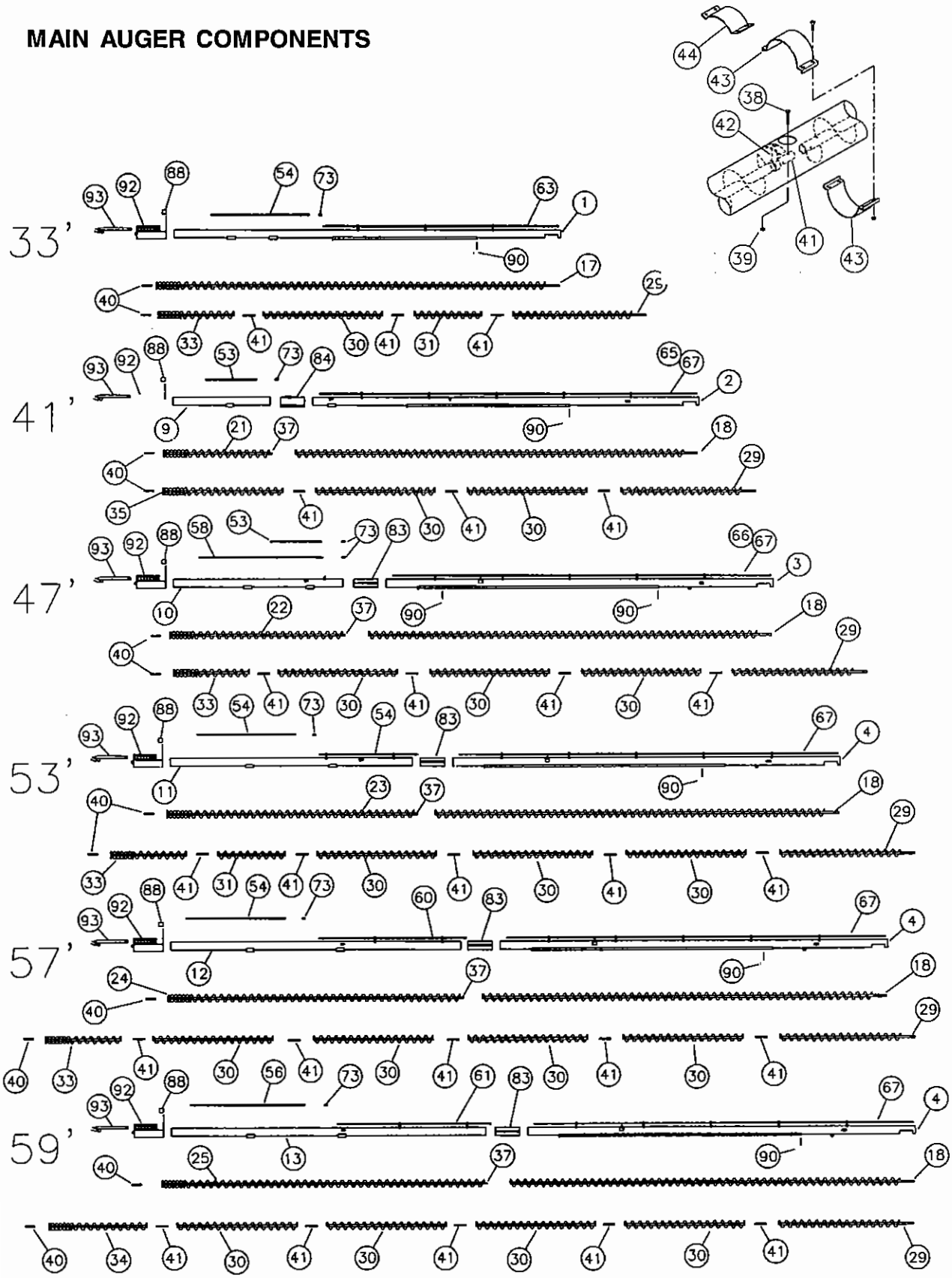

PARTS LIST

MAIN AUGER COMPONENTS

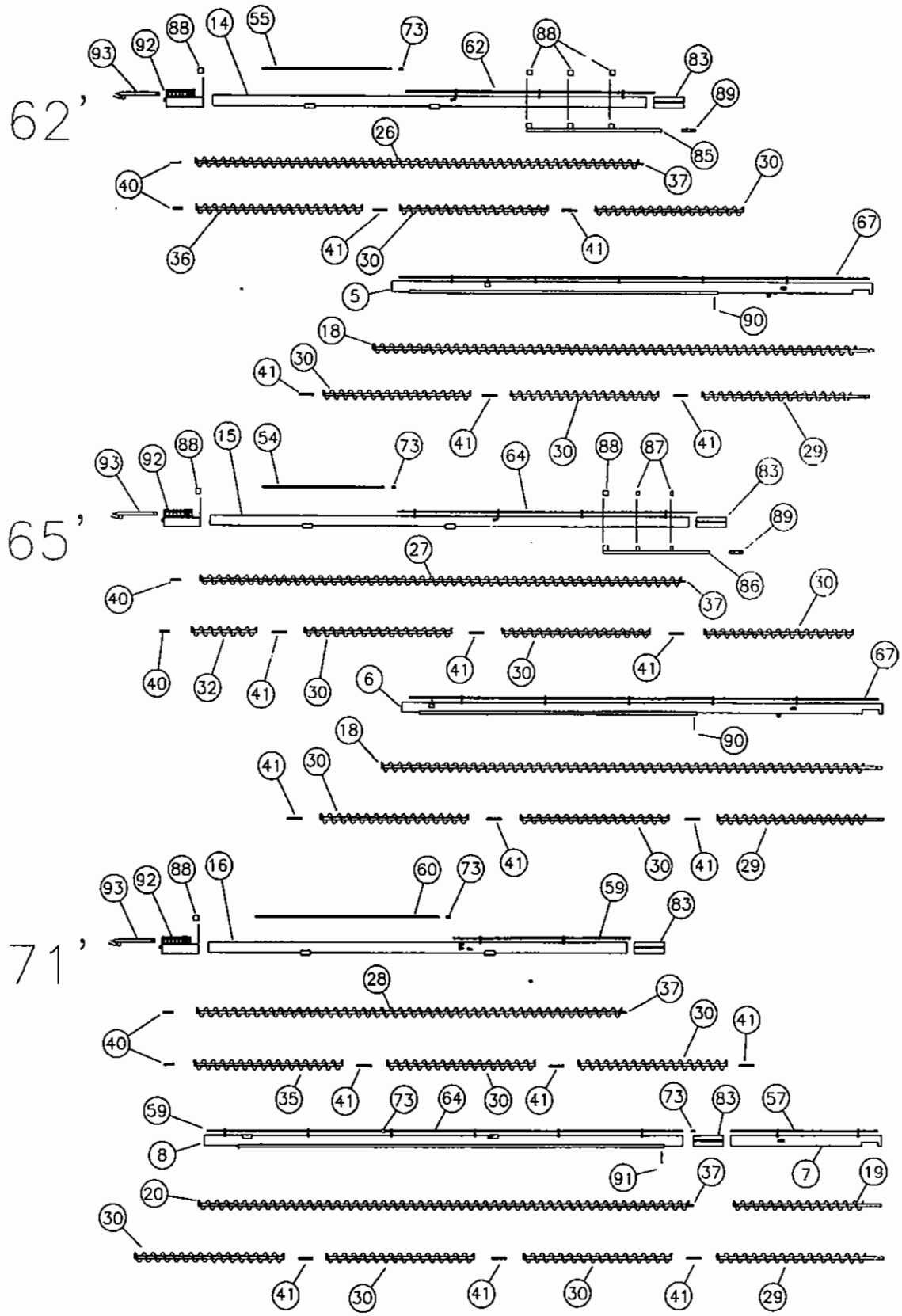

03556A1 A0005635

PARTS LIST

MAIN AUGER COMPONENTS

NOTE: Auger housings shown with drive shaft attached are supplied with the specified drive shaft and drive shaft bearings.

MAYRATH HOUSINGS

REF. NO.	PART NO.	DESCRIPTION
1	- -	8" Galv. Housing (Single Section)
- -	1003597CE-G	f/33' (32'-0" long)
2-7	- -	8" Galv. Housing, Upper
2	1003598-G	f/41' (32'-0" long) f/PTO and Electric Drive only
2	1009786-G	f/41' (32'-0" long) f/Underslung Drive only
3	1003599-G	f/47' (32'-0" long) f/PTO and Electric Drive
3	1009787-G	f/47' (32'-0" long) f/Underslung Drive only
4	1003599-G	f/53', 57' & 59' (32'-0" long)
5	1009788-G	f/62' (32'-0" long)
6	1003600-G	f/65' (32'-0" long)
7	1014709-120	f/71' (10'-0" long)
8	- -	8" Galv. Housing, Center
- -	1014710-320	f/71' (32'-0" long)
9-16	- -	8" Galv. Housing, Lower
9	1003608CE-G	f/41' (8'-0" long)
10	1003627CE-G	f/47' (14'-0" long)
11	1003609CE-G	f/53' (20'-0" long)
- -	1003610CE-G	f/53' w/Corn Screens for PTO Drive
- -	1003611CE-G	f/53' w/Corn Screens for Elec. Drive
12	1009789CE-G	f/57' (24'-0" long)
- -	1009790CE-G	f/57' w/Corn Screens for PTO Drive
- -	1009791CE-G	f/57' w/Corn Screens for Elec. Drive
13	1003612CE-G	f/59' (26'-0" long)
- -	1003613CE-G	f/59' w/Corn Screens for PTO and Elec. Drive
14	1009792CE-G	f/62' (29'-0" long)
- -	1009793CE-G	f/62' w/Corn Screens for PTO Drive
- -	1009794CE-G	f/62' w/Corn Screens for Elec. Drive
15	1003615CE-G	f/65' (32'-0" long)
- -	1003616CE-G	f/65' w/Corn Screens for PTO Drive
- -	1003617CE-G	f/65' w/Corn Screens for Elec. Drive
16	1014711CE-120	f/71' (28'-0" long)

HUTCHINSON HOUSINGS

REF. NO.	PART NO.	DESCRIPTION
1	- -	8" Galv. Housing (Single Section)
- -	1003557CE-G	f/33' (32'-0" long)
2-7	- -	8" Galv. Housing, Upper
2	1003558-G	f/41' (32'-0" long) f/PTO and Electric Drive only
2	1009646-G	f/41' (32'-0" long) f/Underslung Drive only
3	1003559-G	f/47' (32'-0" long) f/PTO and Electric Drive
3	1009647-G	f/47' (32'-0" long) f/Underslung Drive only
4	1003559-G	f/53', 57' & 59' (32'-0" long)
5	1009648-G	f/62' (32'-0" long)
6	1003560-G	f/65' (32'-0" long)
7	1014709-120	f/71' (10'-0" long)
8	- -	8" Galv. Housing, Center
- -	1014710-220	f/71' (32'-0" long)
9-16	- -	8" Galv. Housing, Lower
9	1003568CE-G	f/41' (8'-0" long)
10	1003628CE-G	f/47' (14'-0" long)
11	1003569CE-G	f/53' (20'-0" long)
- -	1003570CE-G	f/53' w/Corn Screens for PTO Drive
- -	1003571CE-G	f/53' w/Corn Screens for Elec. Drive
12	1009581CE-G	f/57' (24'-0" long)
- -	1009582CE-G	f/57' w/Corn Screens for PTO Drive
- -	1009583CE-G	f/57' w/Corn Screens for Elec. Drive
13	1003572CE-G	f/59' (26'-0" long)
- -	1003573CE-G	f/59' w/Corn Screens for PTO and Elec. Drive
14	1009584CE-G	f/62' (29'-0" long)
- -	1009585CE-G	f/62' w/Corn Screens for PTO Drive
- -	1009586CE-G	f/62' w/Corn Screens for Elec. Drive
15	1003575CE-G	f/65' (32'-0" long)
- -	1003576CE-G	f/65' w/Corn Screens for PTO Drive
- -	1003577CE-G	f/65' w/Corn Screens for Elec. Drive
16	1014711CE-120	f/71' (28'-0" long)

PARTS LIST

MAIN AUGER COMPONENTS

NOTE: Auger housings shown with drive shaft attached are supplied with the specified drive shaft and drive shaft bearings.

MAYRATH HOUSINGS FOR OPTIONAL INTERNAL BEARINGS

REF. NO.	PART NO.	DESCRIPTION
1	- -	8" Galv. Housing (Single Section)
- -	1009795CE	f/33' (32'-0" long)
2-7	- -	8" Galv. Housing, Upper
2	1009796	f/41' (32'-0" long) f/PTO and Electric Drive only
2	1009797	f/41' (32'-0" long) f/Underslung Drive only
3	1009798	f/47' (32'-0" long) f/PTO and Electric Drive
3	1009799	f/47' (32'-0" long) f/Underslung Drive only
4	1009798	f/53', 57' & 59' (32'-0" long)
5	1009800	f/62' (32'-0" long)
6	1009801	f/65' (32'-0" long)
7	1014731-120	f/71' (10'-0" long)
8	- -	8" Galv. Housing, Center
- -	1014732-320	f/71' (32'-0" long)
9-16	- -	8" Galv. Housing, Lower
9	1009804CE	f/41' (8'-0" long)
10	1009805CE	f/47' (14'-0" long)
11	1009806CE	f/53' (20'-0" long)
- -	1009807CE	f/53' w/Corn Screens for PTO Drive
- -	1009808CE	f/53' w/Corn Screens for Elec. Drive
12	1009809CE	f/57' (24'-0" long)
- -	1009810CE	f/57' w/Corn Screens for PTO Drive
- -	1009811CE	f/57' w/Corn Screens for Elec. Drive
13	1009812CE	f/59' (26'-0" long)
- -	1009813CE	f/59' w/Corn Screens f/PTO and Elec. Drive
14	1009814CE	f/62' (29'-0" long)
- -	1009815CE	f/62' w/Corn Screens for PTO Drive
- -	1009816CE	f/62' w/Corn Screens for Elec. Drive
15	1009817CE	f/65' (32'-0" long)
- -	1009818CE	f/65' w/Corn Screens for PTO Drive
- -	1009819CE	f/65' w/Corn Screens for Elec. Drive
16	1014733CE-120	f/71' (28'-0" long)

HUTCHINSON HOUSINGS FOR OPTIONAL INTERNAL BEARINGS

REF. NO.	PART NO.	DESCRIPTION
1	- -	8" Galv. Housing (Single Section)
- -	1009587CE	f/33' (32'-0" long)
2-7	- -	8" Galv. Housing, Upper
2	1009588	f/41' (32'-0" long) f/PTO and Electric Drive only
2	1009589	f/41' (32'-0" long) f/Underslung Drive only
3	1009591	f/47' (32'-0" long) f/PTO and Electric Drive
3	1009590	f/47' (32'-0" long) f/Underslung Drive only
4	1009591	f/53', 57' & 59' (32'-0" long)
5	1009592	f/62' (32'-0" long)
6	1009593	f/65' (32'-0" long)
7	1014731-120	f/71' (10'-0" long)
8	- -	8" Galv. Housing, Center
- -	1014732-220	f/71' (32'-0" long)
9-16	- -	8" Galv. Housing, Lower
9	1009596CE	f/41' (8'-0" long)
10	1009597CE	f/47' (14'-0" long)
11	1009598CE	f/53' (20'-0" long)
- -	1009599CE	f/53' w/Corn Screens for PTO Drive
- -	1009600CE	f/53' w/Corn Screens for Elec. Drive
12	1009601CE	f/57' (24'-0" long)
- -	1009602CE	f/57' w/Corn Screens for PTO Drive
- -	1009603CE	f/57' w/Corn Screens for Elec. Drive
13	1009604CE	f/59' (26'-0" long)
- -	1009605CE	f/59' w/Corn Screens f/PTO and Elec. Drive
14	1009606CE	f/62' (29'-0" long)
- -	1009607CE	f/62' w/Corn Screens for PTO Drive
- -	1009608CE	f/62' w/Corn Screens for Elec. Drive
15	1009609CE	f/65' (32'-0" long)
- -	1009610CE	f/65' w/Corn Screens for PTO Drive
- -	1009611CE	f/65' w/Corn Screens for Elec. Drive
16	1014733CE-120	f/71' (28'-0" long)

MAIN AUGER COMPONENTS

AUGER FLIGHT SECTIONS

STANDARD DUTY FLIGHT (7 GA. FLIGHT ON 1.90" O.D. TUBING)

REF. NO.	PART NO.	DESCRIPTION
17	- -	Flight
- -	1009613	f/33' (33'-3" long)
18-19	- -	Flight, Upper
18	1009614	f/41', 47', 53', 57', 59', 62' & 65' (33'-0" long)
19	1009615	f/71' (10'-0" long)
20	- -	Flight, Center (includes connecting stub)
- -	1009616	f/71' (33'-0" long)
21-28	- -	Flight, Lower (includes connecting stub)
21	1009617	f/41' (8'-3" long)
22	1009618	f/47' (14'-3" long)
23	1009619	f/53' (20'-3" long)
24	1009620	f/57' (24'-3" long)
25	1009621	f/59' (26'-3" long)
26	1009622	f/62' (29'-3" long)
27	1009623	f/65' (32'-3" long)
28	1009624	f/71' (28'-3" long)

HEAVY DUTY FLIGHT (1/4" THICK FLIGHT ON 1.90" O.D. TUBING)

REF. NO.	PART NO.	DESCRIPTION
17	- -	Flight
- -	1009625	f/33' (33'-3" long)
18-19	- -	Flight, Upper
18	1009626	f/41', 47', 53', 57', 59', 62' & 65' (33'-0" long)
19	1009627	f/71' (10'-0" long)
20	- -	Flight, Center (includes connecting stub)
- -	1009636	f/71' (33'-0" long)
21-28	- -	Flight, Lower (includes connecting stub)
21	1009628	f/41' (8'-3" long)
22	1009629	f/47' (14'-3" long)
23	1009630	f/53' (20'-3" long)
24	1009631	f/57' (24'-3" long)
25	1009632	f/59' (26'-3" long)
26	1009633	f/62' (29'-3" long)
27	1009634	f/65' (32'-3" long)
28	1009635	f/71' (28'-3" long)

STANDARD DUTY FLIGHT FOR OPTIONAL INTERNAL BEARINGS (7 GA. FLIGHT ON 1.90" O.D. TUBING)

REF. NO.	PART NO.	DESCRIPTION
29	- -	Flight, Upper
- -	6824A1	f/33', 41', 47', 53', 57', 59', 62', 65' & 71' (10'-10 1/2" long)
30-31	- -	Flight, Intermediate
30	6310A1	f/33', 41', 47, 53', 57', 59', 62', 65' & 71' (9'-9 3/4" long)
31	6827A1	f/33' & 53' (5'-9 3/4" long)
32-36	- -	Flight, Lower
32	6829A1	f/65' (4'-2" long)
33	6826A1	f/33', 47', 53' & 57' (6'-2" long)
34	1009637	f/59' (8'-2" long)
35	6825A1	f/41' & 71' (10'-2" long)
36	6823A1	f/62' (11'-2" long)

HEAVY DUTY FLIGHT FOR OPTIONAL INTERNAL BEARINGS (1/4" THICK FLIGHT ON 1.90" O.D.TUBING)

REF. NO.	PART NO.	DESCRIPTION
29	- -	Flight, Upper
- -	1009638	f/33', 41', 47', 53', 57', 59', 62', 65' & 71' (10'-10 1/2" long)
30-31	- -	Flight, Intermediate
30	1009640	f/33', 41', 47', 53', 57', 59', 62', 65' & 71' (9'-9 3/4" long)
31	1009639	f/33' & 53' (5'-9 3/4" long)
32-36	- -	Flight, Lower
32	1009641	f/65' (4'-2" long)
33	1009642	f/33', 47', 53' & 57' (6'-2" long)
34	1009643	f/59' (8'-2" long)
35	1009644	f/41' & 71' (10'-2" long)
36	1009645	f/62' (11'-2" long)

FLIGHT CONNECTING COMPONENTS

FOR STANDARD FLIGHT

REF. NO.	PART NO.	DESCRIPTION
37	8320A	Connecting Stub (1 1/4" x 9 1/2" long)
38	1009499	Connecting Bolt 7/16" x 3" long (grade 8) Hex Head Capscrew
39	1009236	Side Depress Lock Nut 7/16"
40	8383C	Tail Stub 1 1/4" x 7 3/4" long

FOR OPTIONAL INTERNAL BEARING FLIGHT

REF. NO.	PART NO.	DESCRIPTION
38	1009499	Connecting Bolt 7/16" x 3" long (grade 8) Hex Head Capscrew
39	1009236	Side Depress Locknut 7/16"
40	8383C	Tail Stub 1 1/4" x 7 3/4" long
41	8393C	Connecting Stub 1 1/4" x 11 1/2"
42	60522	Internal Bearing Hanger w/Bronze Bushing
- -	8379C	Replacement Bronze Bushing only
43	8394C	Inspection Hole Cover (large)
44	1042D	Inspection Hole Cover (small)

PARTS LIST

MAIN AUGER COMPONENTS
DRIVE SHAFT COMPONENTS

REF. NO.	PART NO.	DESCRIPTION
53	1002443	Drive Shaft, 1" x 4'-3" long f/41' w/PTO or Electric Drive and 47' w/Electric Drive
54	1002445	Drive Shaft, 1" x 8'-2" long f/33', 57' & 65' with PTO Drive and all 53' units
55	1002446	Drive Shaft, 1" x 8'-8" long f/62' with PTO Drive
56	1002447	Drive Shaft, 1" x 9'-6" long f/59' with PTO Drive
57	1002448	Drive Shaft, 1" x 9'-9" long f/71' units
58	1002449	Drive Shaft, 1" x 10'-3 1/2" long f/47' with PTO Drive
59	1002450	Drive Shaft, 1" x 11'-9 1/2" long f/71' units
60	1002451	Drive Shaft, 1" x 12'-3" long f/57' and 71' (PTO only) units
61	1002452	Drive Shaft, 1" x 12'-9" long f/59' units
62	1009493	Drive Shaft, 1" x 16'-7" long f/62' units
63	1002455	Drive Shaft, 1" x 19'-6" ong f/33' units
64	1002456	Drive Shaft, 1" x 20'-0" long f/65' & 71' units
65	1009547	Drive Shaft, 1" x 26'-0" long f/41' with Underslung Drive
66	1009562	Drive Shaft, 1" x 29'-8 3/4" long f/47' with Underslung Drive
67	1002457	Drive Shaft, 1" x 31'-3 1/2" long f/41' & 47' with PTO or Electric Drive and all 53', 57', 59', 62' & 65' units

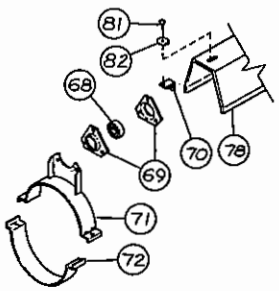

01020A1-C

REF. NO.	PART NO.	DESCRIPTION
68	6382C	Drive Shaft Brg. (1" Bore)
69	54008	Flangette f/Brg.
70	54584	Drive Shaft Cover Mounting Clip
71	630487	Band-on Bearing Stand
72	5033A1	Half Band 2" wide
73	1002382	Drive Shaft Coupler (1" to 1")
74	- -	Drive Shaft to Gearbox Coupler (with Snap Ring)
- -	1002382	f/33'-57' (1" to 1")
- -	1002383	f/59', 62', 65' & 71' (1 1/4" to 1")
75	1002381	Snap Ring only
76	8371C	Square Key 1/4" x 1 1/2"
77	- -	Gearbox Shield Brkt.
- -	1002603	f/33', 41', 47', 53' & 57'
- -	1002604	f/59', 62', 65' & 71'
78	- -	Drive Shaft Covers
- -	1025248	(5'-8 1/4" long)
- -	1025247	(5'-0" long)
- -	1025246	(4'-0" long)
- -	1025245	(3'-0" long)
- -	1025244	(2'-0" long)
- -	1025243	(1'-0" long)
- -	1025242	(0'-8" long)
79	- -	Telescoping Drive Shaft Cover
- -	1025250	(1'-6" long)
- -	1025249	(0'-8" long)
80	- -	Gearbox (See Drive Components)
81	33183	Sheet Metal Screw
82	33020	Washer 1" O.D. x 1/4" I.D.
- -	- -	Enclosed Head Drive (See Page P-4)

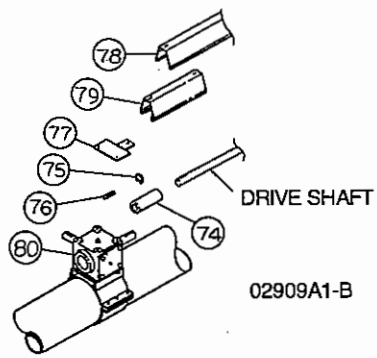

02909A1-B

MISCELLANEOUS COMPONENTS

REF. NO.	PART NO.	DESCRIPTION
83-84	- -	Connecting Band
83	8309A	f/47', 53', 57', 59', 62', 65' & 71'
84	1002698	f/41' (with gearbox mount and decals)
85-86	- -	Band-on Track Extension
85	1009483	f/62' (9'-0" long)
86	12232	f/65' (7'-1" long)
87	5033A1	2" wide Halfband (f/mounting track)
88	5042A1	4" wide Halfband (f/mounting track and intake guard)
89	54548	Track Connecting Plate
90	54330	Stop f/Undercarriage Track
91	1014727	Stop f/Undercarriage Track (71' only) w/Cable Anchors for Undertruss
92	1015253	Intake Guard
- -	8379C	Bronze Bushing for Intake Guard
- -	1013526	Drain Hole Cover
93	1007734	Hitch Pipe
- -	835198	Corn Screen Cover 8"
- -	835199	Corn Screen Cover Band 8"

A0005639

PARTS LIST

MAIN AUGER COMPONENTS

TOP TRUSS & UNDERTRUSS FOR MODELS UP TO 65'
(See page P-11 for 71' Model.)

REF. NO.	PART NO.	DESCRIPTION
1	550208	Top Truss Tube
2	550313	Cable Clip
3	550209	Side Truss Tube (2) f/41', 47', 53' & 57'
4	12145	Welded Center Truss Assy. (25" x 34") f/59', 62' & 65' (Includes Ref. 14 & 15)
5-6	---	Undertruss Stand-off
5	8319C	Band-on Type f/57' & 59'
6	12227	Bolt-on Type f/62' & 65' (Includes cable pulley and clevis assembly)
7	6302D	Pulley and Clevis Assembly only (See page P-12 for parts breakdown.)
8	5029A1	Halfband 6" wide
9	---	Truss Cable
--	1002568	f/41' (1/4" x 26'-0" long)
--	1002569	f/47' & 53' (1/4" x 31'-6" long)
--	54758	f/57' (1/4" x 38'-0" long)
--	1002572	f/59' (1/4" x 40'-0" long)
--	1003779	f/62' & 65' (1/4" x 42'-0" long)
10	---	Undertruss Cable
--	54758	f/57' (1/4" x 38'-0" long)
--	1002572	f/59' (1/4" x 40'-0" long)
--	1003779	f/62' & 65' (1/4" x 42'-0" long)
11	6369C	Cable Clamp 1/4"
12	6308C	Eyebolt 1/2" x 8" (grade 2) (plated)
13	1002205	Hex Head Capscrew, 5/8" x 9" Grade 5
14	5062B1	Attach Pin for Welded Truss
15	---	Cotter Pin, 3/16" x 1 1/2"

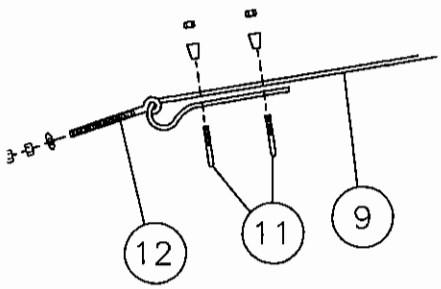

02881A1-B

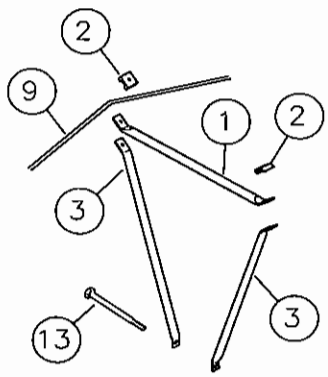

02869A1-B

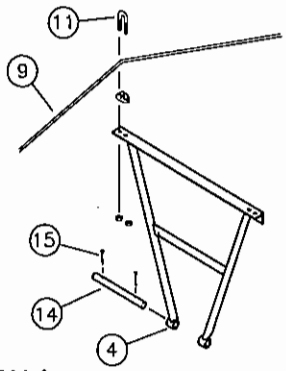

02915A1-A

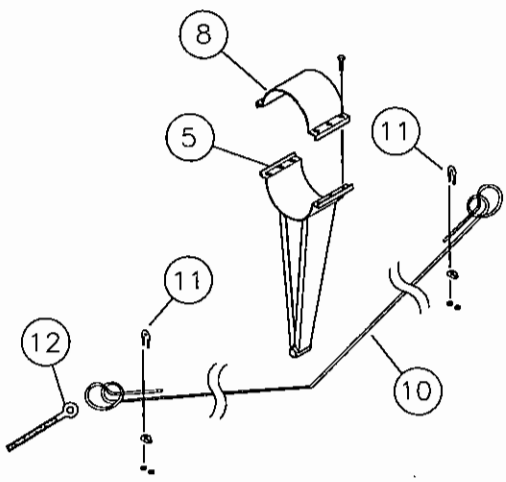

02919A1

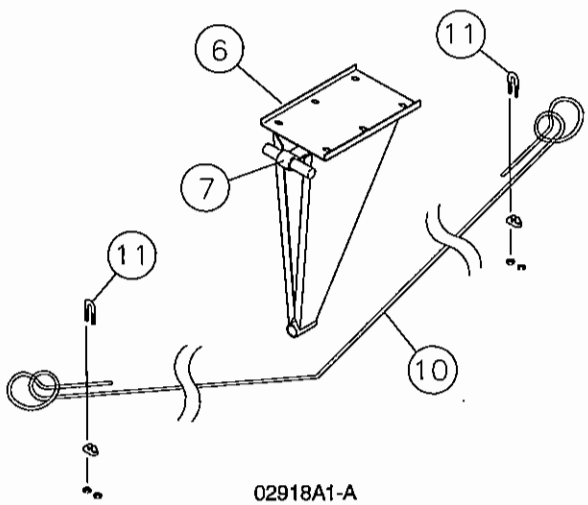

02918A1-A

PARTS LIST

MAIN AUGER COMPONENTS

TOP TRUSS & UNDERTRUSS
FOR 71' MODELS ONLY

REF. NO.	PART NO.	DESCRIPTION
1	1007847	Side Strap, 39 1/2" long
2	106398	28" Crossbrace
3	1007848	18 5/8" Crossbrace
4	1008507	Vertical Tube
5	1008508	Side Strap 30" long
6	1014727	Track Stop / Cable Anchor
7	1002571	Truss Cable, 1/4" x 34'-0" long
8	1006206	Truss Cable, 1/4" x 43'-0" long
9	8381C	Truss Cable, 1/4" x 51'-0" long
10	6308C	Eyebolt, 1/2" x 8" Grade 2
11	4841	U-Bolt, 3/8"
12	6369C	1/4" Cable Clamp
13	3010L11	3/8" Cable Clamp

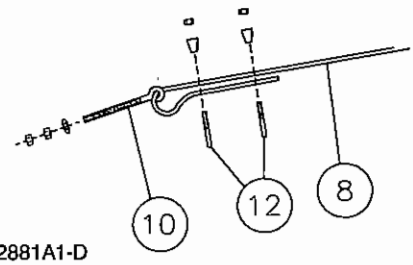

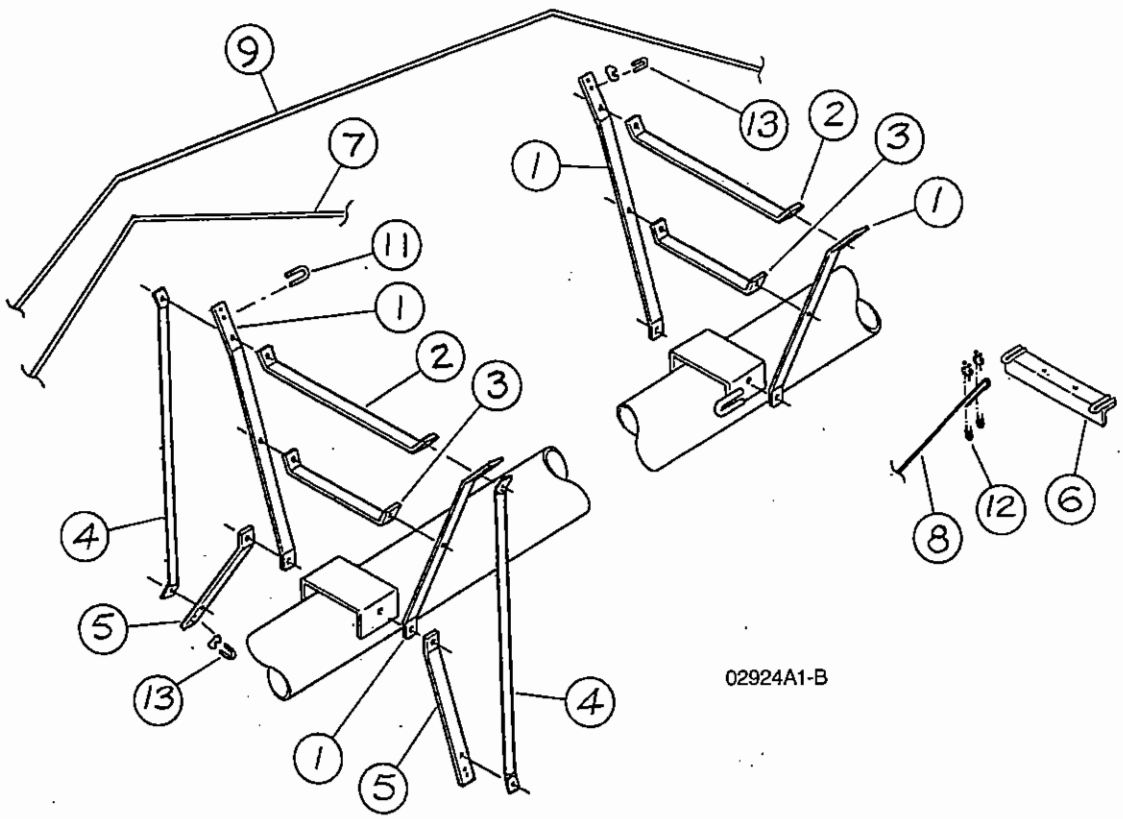

PARTS LIST

UNDERCARRIAGE COMPONENTS

REF. NO.	PART NO.	DESCRIPTION
1	- -	Undercarriage with Slide Assembly
- -	1002502	f/33'
- -	1002503	f/41'
- -	1002504	f/47'
- -	1002505	f/53'
- -	1001050	f/57'
- -	1002506	f/59'
- -	1002507	f/62' & 65'
2	1002508	Undercarriage with Slide Assembly f/71'
3	8387D	Undercarriage Mount Clamp f/33', 41', 57' & 53'
4	6002A1	Undercarriage Mount Clamp f/57', 59', 62' & 65'
5-10	6302D	Pulley & Clevis Assy. f/57' & 59'
5	50079A1	Cable Pulley Bushing
6	5120A1	Pulley Clevis
7	3223A1	1/4" Cable Pulley (1 1/16" I.D. x 3" O.D.)
8	- - -	Cotter Pin 1/4" x 2" long
9	- - -	1/2" x 2" Hex Head Capscrew Grade 5
10	- - -	1/2" Nylock Nut

REF. NO.	PART NO.	DESCRIPTION
11	- - -	Winch Cable
- -	1002567	f/33' (1/4" x 24' long)
- -	1002573	f/41' (1/4" x 44' long)
- -	1002574	f/47' (1/4" x 51' long)
- -	1002575	f/53' (1/4" x 57' long)
- -	8396C	f/57' (1/4' x 82' long)
- -	1002577	f/59' (1/4" x 84' long)
- -	1002578	f/62' (1/4" x 93' long)
- -	1002579	f/65' (1/4" x 98' long)
- -	1002580	f/71' (1/4" x 115' long)
12	6369C	Cable Clamp 1/4"
13	- - -	Winch
- -	1025603	f/33', 41' & 47'
- -	1025604	f/53', 57', 59', 62' & 65'
- -	1025605	f/71'
14	- - -	Spindle and Hub Assembly (See page P-13 for parts breakdown.)
- -	1001562	f/33' & 41'
- -	1001563	f/47', 53', 57' & 59'
- -	1001564	f/62', 65' & 71'
- -	6393D	15" x 4.5 KB 4-Bolt Wheel

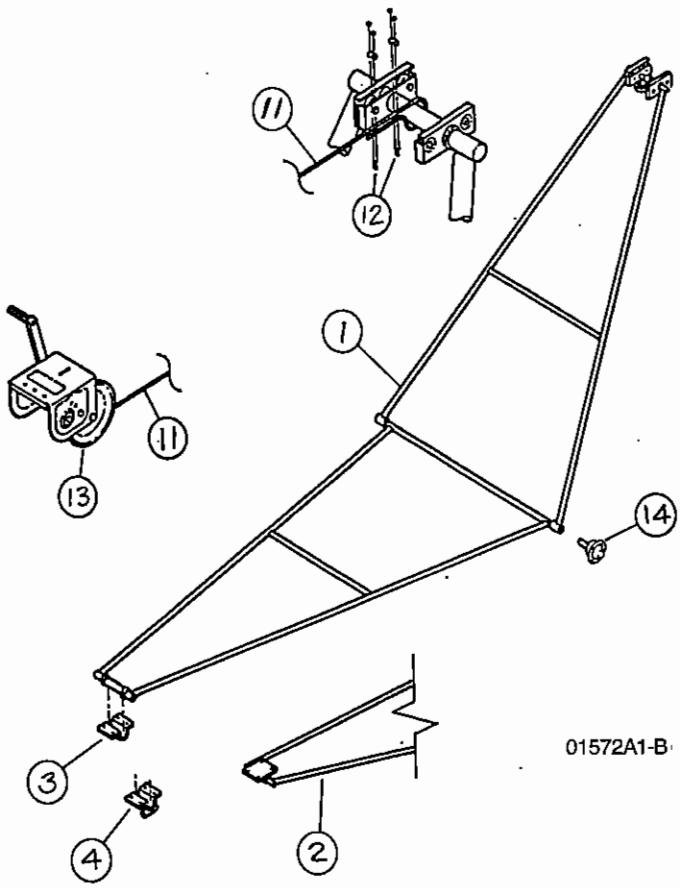

01572A1-B

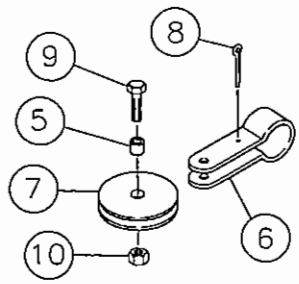

02911A1-A

PARTS LIST

UNDERCARRIAGE COMPONENTS
SPINDLE & HUB ASSEMBLIES

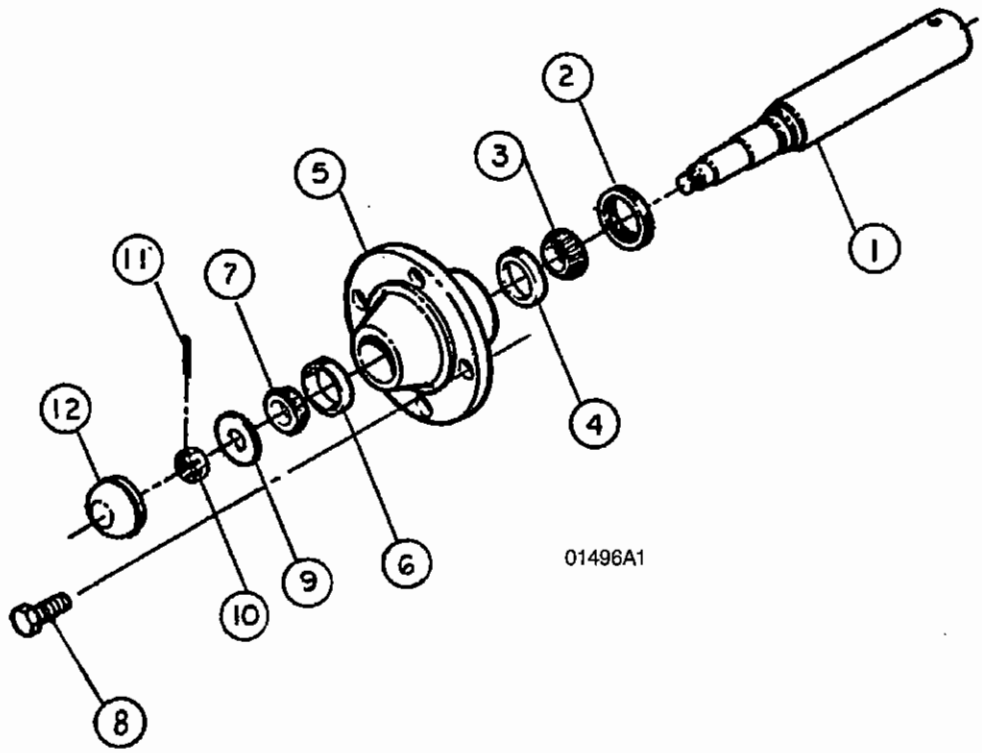

REF NO.	DESCRIPTION	4-BOLT (1 5/8" x 10") f/8" x 33' & 41'	4-BOLT (2 1/16" x 10") f/8" x 47', 53', 57' & 59	4-BOLT (2 1/16" x 14") f/8" x 62', 65' & 71'
–	Spindle & Hub Assy.	1001562	1001563	1001564
1	Spindle	1001001	1001002	1001003
2	Grease Seal	106245	106245	106245
3	Inner Cone	3079R1	3079R1	3079R1
	(Timken No.)	(LM67048)	(LM67048)	(LM67048)
4	Inner Cup	3148R1	3148R1	3148R1
	(Timken No.)	(LM67010)	(LM67010)	(LM67010)
5	Hub	*90174	*90174	*90174
6	Outer Cup	40552	40552	40552
	(Timken No.)	(LM11910)	(LM11910)	(LM11910)
7	Outer Cone	40551	40551	40551
	(Timken No.)	(LM11949)	(LM11949)	(LM11949)
8	Lug Bolt	106241	106241	106241
8	Lug Nut	- -	- -	- -
9	Washer	106252	106252	106252
10	Slotted Hex Nut	106250 (5/8")	106250 (5/8")	106250 (5/8")
11	Cotter Pin	D1146	D1146	D1146
		(5/32" x 1 1/4")	(5/32" x 1 1/4")	(5/32" x 1 1/4")
12	Hub Cap	106244	106244	106244

*** Furnished with Cups Only.**

PARTS LIST

DIRECT PTO DRIVE COMPONENTS

REF. NO.	PART NO.	DESCRIPTION
1	- - -	PTO Driveline
		(See page P-15 for parts breakdown.)
- -	1024077	f/33', 41', 47', 53' & 57'
- -	1024078	f/59', 62', 65' & 71'
2	862113	PTO to Gearbox Shield
3	- - -	Gearbox
		(See page P-17 for parts breakdown.)
- -	1001592-1	f/33', 41', 47', 53' & 57'
- -	1006130-1	f/59', 62', 65' & 71'
4	- - -	Gearbox Mount
- -	1002718	f/33', 47', 53' & 57'
- -	6025A1	f/41'
- -	842157	f/59', 62', 65' & 71'
5	- -	Halfband w/Manual Container Brkt.
- -	1006005	f/8" x 33', 41', 47', 53' & 57'
- -	1006169	f/8" x 59', 62', 65' & 71'
6	8371C	Square Key 1/4" x 1 1/2" long
7	1025407	PTO Driveline Support
8	- - -	Driveline Support Pin
9	5033A1	Halfband
- -	- -	Manual Container
10	1025611	Chain Attach Bracket

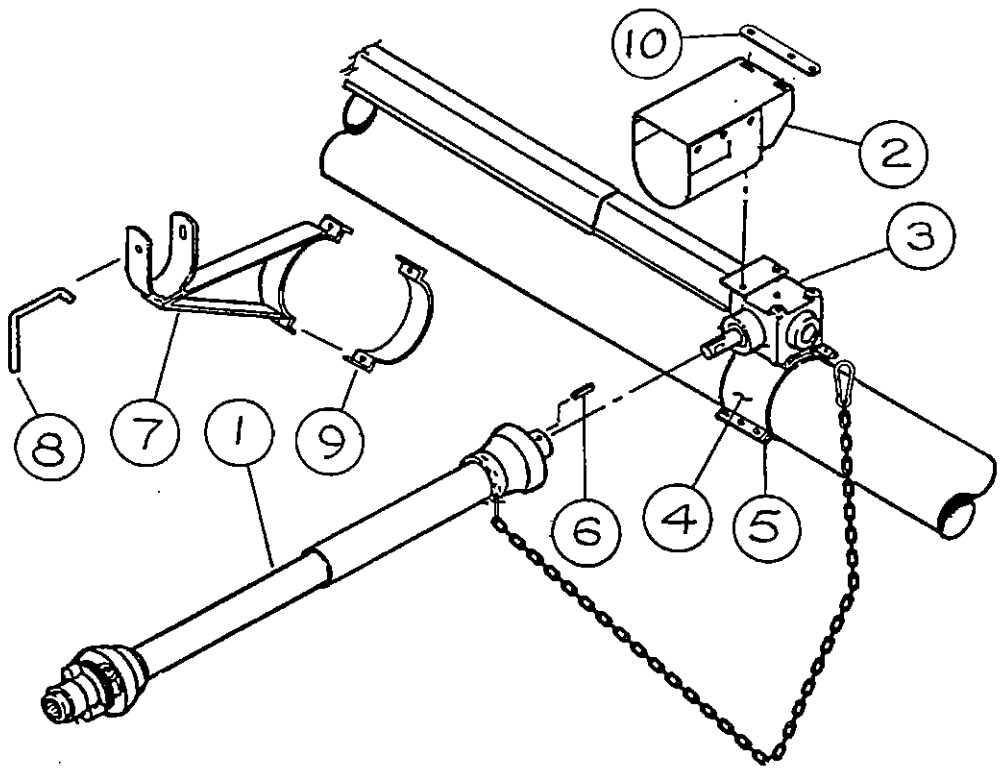

PARTS LIST

PTO DRIVELINE COMPONENTS

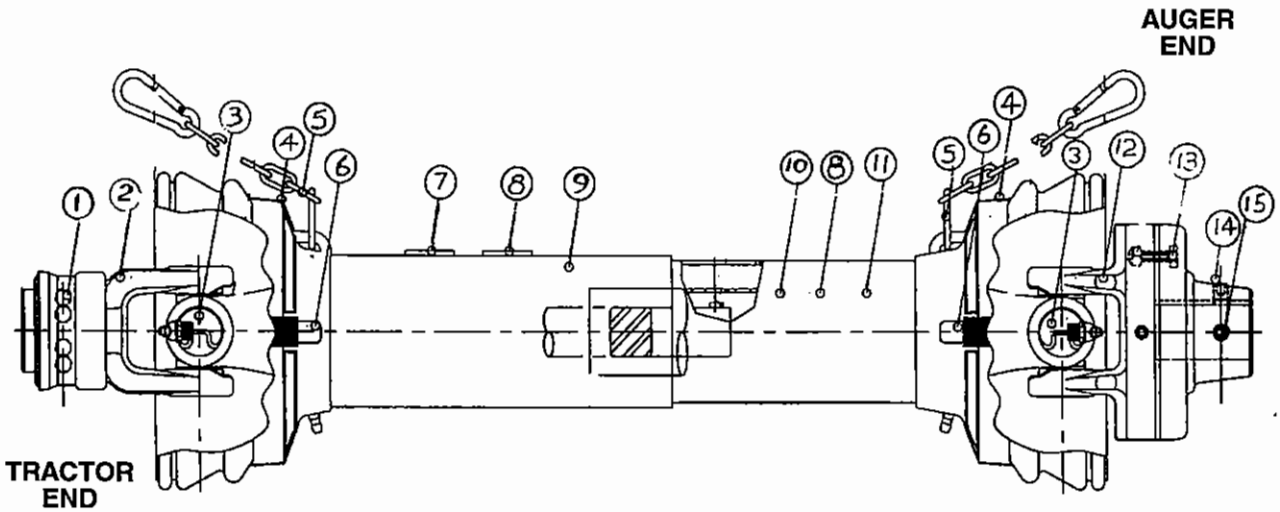

NOTE: Repair parts for PTO drivelines can also be purchased directly from:
Weasler Engineering, Inc.
P.O. Box 558
West Bend, WI 53095

REF. NO	DESCRIPTION	FOR 8" x 33', 41', 47', 53' & 57' MODELS U-JOINT TYPE - 12R AUGER END 1" BORE WITH 1/4" KEYSEAT TRACTOR END 1 3/8 - 6B SPLINE WITH SHEAR BOLT		FOR 8" x 59', 62', 65' & 71' MODELS U-JOINT TYPE - 14R AUGER END 1 1/4" BORE WITH 1/4" KEYSEAT TRACTOR END 1 3/8 - 6B SPLINE WITH SHEAR BOLT	
		HUTCHINSON/ MAYRATH PART NO.	WEASLER PART NO.	HUTCHINSON/ MAYRATH PART NO.	WEASLER PART NO.
- -	PTO Driveline Complete	1024077	222-21373	1024078	232-21372
1	Spring Lock Flange Repair Kit	26-10070	26-10070	26-10070	26-10070
2	End Yoke	12061-1000	12061-1000	14121-1010	14121-1010
3	U-Joint Cross Repair Kit	40515	03-10077	40524	03-10134
4	CE Warning Decal	13-14891	13-14891	13-14891	13-14891
5	Chain Kit	19-15083	19-15083	19-15083	19-15083
6	Non-Rotating Guard Repair Kit	19-15112	19-15112	19-15086	19-15086
7	Outer Safety Sign	13-10021	13-10021	13-10021	13-10021
8	CE Guard Label	13-15139	13-15939	13-15139	13-15139
9	Outer Guard	97-21373	97-21373	97-21372	97-21372
10	Inner Guard	96-21373	96-21373	96-21372	96-21372
11	Safety Sign (not shown)	13-10022	13-10022	13-10022	13-10022
12	Yoke & Ball Shear Assembly	40-50010	40-50010	40-40016	40-40016
13	Shear Bolt & Nut Kit (See Note)	1004778	- - -	1004778	- -
14	.375 - 16 x .38 long Setscrew	33170	11-10215	33170	11-10215
15	.375 - 16 x .50 long Setscrew	11-11035	11-11035	11-11035	11-11035

Note: Shear Bolt Kit includes (6) 5/16" - 18 x 1" long Grade 5 hex bolts and locknuts.

PARTS LIST

TOP MOUNTED ELECTRIC DRIVE COMPONENTS

REF. NO.	PART NO.	DESCRIPTION
1	- -	Gearbox
		(See page P-17 for parts breakdown.)
	1001592-1	f/8" x 33', 41', 47', 53' & 57'
	1006130-1	f/8" x 59', 62', 65' & 71'
2	- -	Gearbox Mount
	1002718	f/8" x 33', 41', 47', 53' & 57'
	842157	f/8" x 59', 62', 65' & 71'
3	- -	Half Band w/Bracket
	1006005	f/8" x 33', 41', 47', 53' & 57'
	1006169	f/8" x 59', 62', 65' & 71'
4	- -	Motor Mount Frame
	1002749	f/8" x 33', 41', 47', 53' & 57'
	1002750	f/8" x 59', 62', 65' & 71"
5	5029A1	Half Band for Motor Mount Frame
6	1002760	Belt Guard Mount Bracket
7	1025189	Belt Guard
8	40157	Aluminum Sheave 2B 15" - 1" Bore
		f/8" x 33', 41', 47' & 53'
8	40160	Aluminum Sheave 3B 15" - 1" Bore
		f/8" x 57'
8	40161	Aluminum Sheave 3B 15" - 1 1/4" Bore
		f/8" x 59', 62', 65' & 71'
9	40122	Belt B-62
10	4046A1	Square Key 1/4" x 3"
11	1004287	Manual Container w/Caps
- -	1004744	Cap f/Manual Container

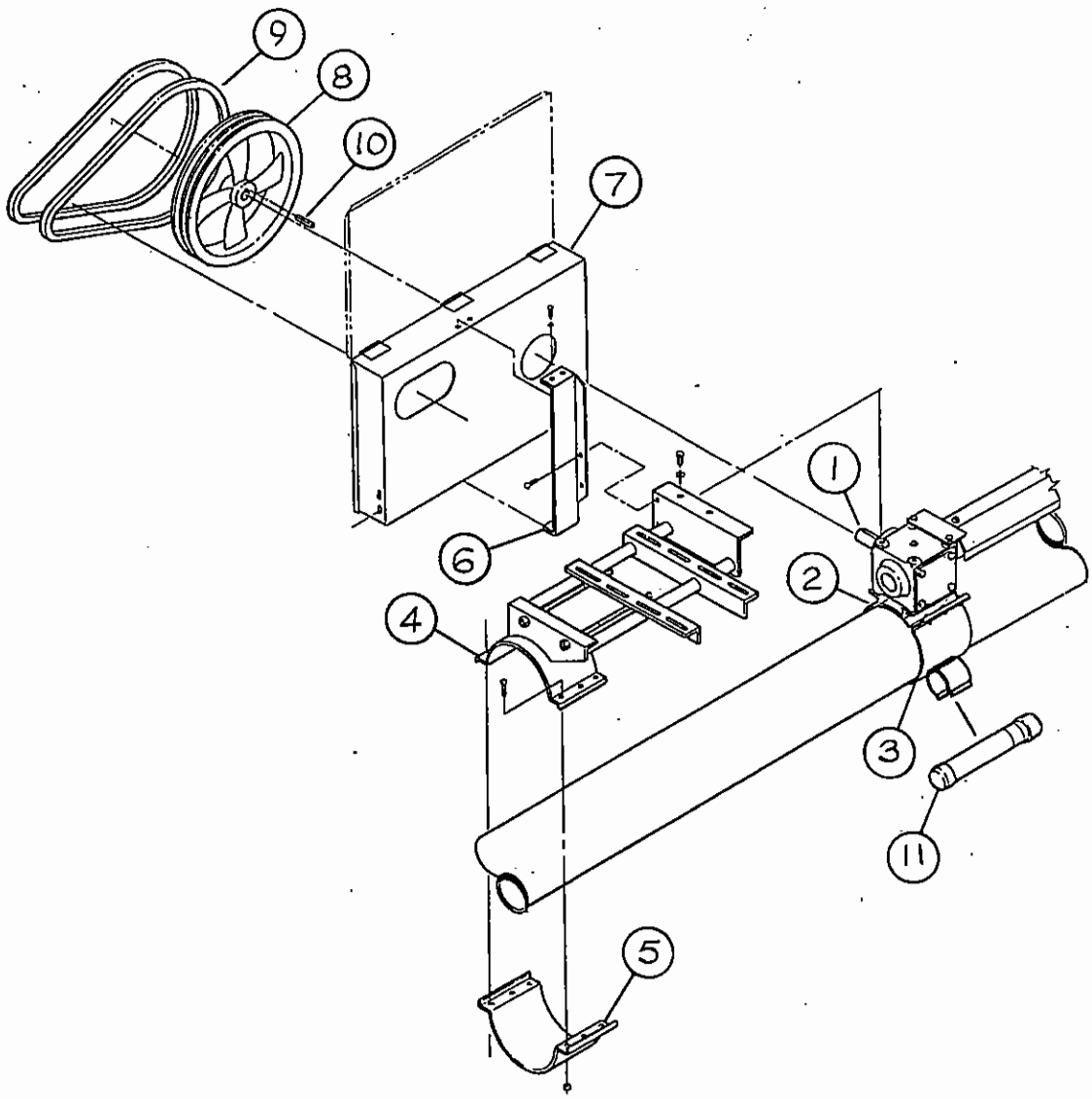

PARTS LIST

GEARBOX COMPONENTS

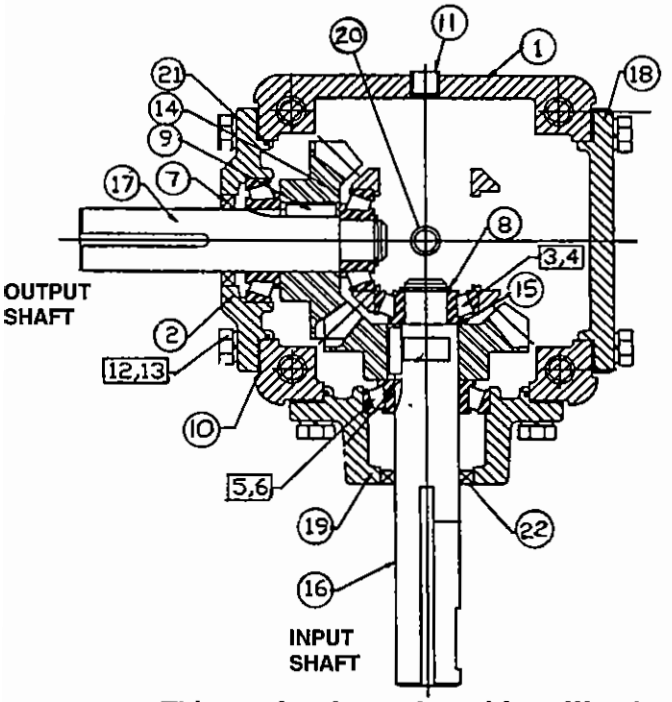

This gearbox is purchased from Weasler. The word "CHINA" will be inscribed on the housing.

COMPLETE PART NO. 1001592-1

1" DIA. INPUT SHAFT - 1" DIA. OUTPUT SHAFT
3/8" MOUNTING HOLES
4 1/4" SQUARE MOUNTING PATTERN
RATIO 1 TO 1

REF. NO.	QTY. REQ'D.	PART NO.	DESCRIPTION
1	1	1023564	Case
2	1	10233565	End Cap
3	2	40388	Brg. Cone (LM11749)
4	2	40389	Brg. Cup (LM11710)
5	2	40377	Brg. Cone (LM44643)
6	2	40378	Brg. Cup (LM44610)
7	2	1023280	Seal (Nat. # 470553)
8	2	1023566	Snap Ring
9	2	020153	Square Key 1/4" x 7/8" lg.
10	A/R	1023289	Shim Kit
11	2	020009	1/4" Pipe Plug
12	8	4701-1	5/16" x 3/4" NC Capscrew
13	8	33144	5/16" Lockwasher
14	2	1023286	Gear 90° Bevel - 19 tooth
15	2	1023567	Spacer
16*	1	1023568	Input Shaft
17	1	1023569	Output Shaft
18	1	1023570	Cover
19	1	1023571	Quill
20	1	035916	1/4" Vented Plug
21	2	1023282	O-Ring (3.15" O.D.)
22	1	1023281	Seal (2" O.D.)

GEARBOX COMPONENTS

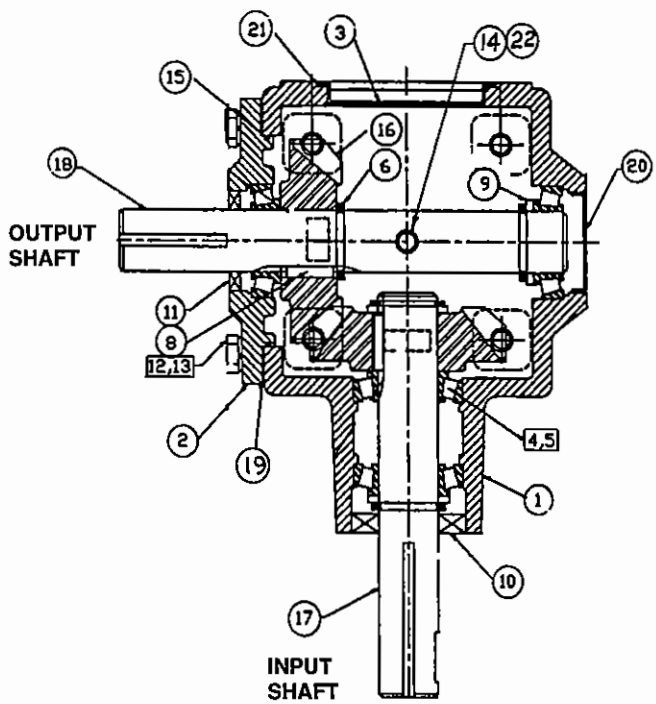

The gearbox is purchased from Weasler. The word "CHINA" will be inscribed on the housing.

COMPLETE PART NO. 1006130-1

1 1/4" DIA. INPUT SHAFT - 1 1/4" DIA. OUTPUT SHAFT
3/8" MOUNTING HOLES - 4" SQ. MOUNTING PATTERN
RATIO 1 TO 1

REF. NO.	QTY. REQ'D.	PART NO.	DESCRIPTION
1	1	1023572	Case
2	1	1023573	End Cap
3	1	1023574	Large Cover
4	4	3079R1	Brg. Cone (LM57048)
5	4	3148R1	Brg. Cup (LM67010)
6	4	003538	Snap Ring
8	2	020153	Square Key 1/4" x 7/8" lg.
9	3	1023527	Spacer.
10	1	1023278	Seal (Nat. # 471808).
11	1	1023279	Seal (Nat. # 470163)
12	4	33060	3/8" x 1" NC Capscrew
13	4	D1150	3/8" Lockwasher
14	1	020009	1/4" Pipe Plug
15	1	1023282	O-Ring (3.15" O.D.)
16	2	1023287	Gear 90° Bevel - 17 tooth
17	1	1023575	Input Shaft
18	1	1023576	Output Shaft
19	A/R	1023288	Shim Kit
20	1	1023577	Small Cover
21	1	1023578	Gasket Cover
22	1	035916	1/4" Vented Plug

Hutchinson/Mayrath/TerraTrack
*A Division of **GLOBAL** Industries, Inc.*

P.O. Box 629 514 W. Crawford Clay Center, KS 67432
Phone 785-632-2161 1-800-523-6993 FAX 785-632-5964