Publication No. 1012722

# 8" RACK & PINION BIN WELL CONTROL ASSEMBLY INSTRUCTIONS

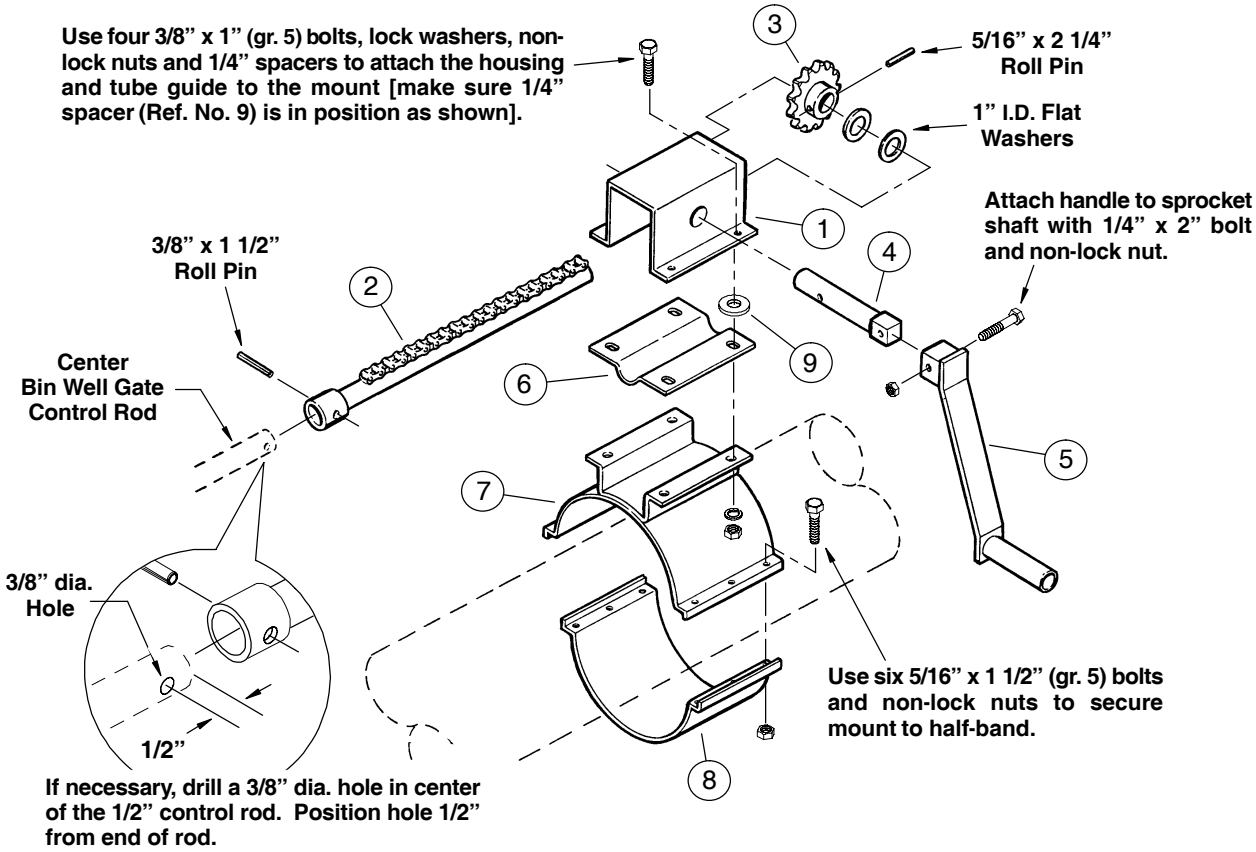


| REF. NO. | PART NO. | DESCRIPTION |
|---|---|---|
| 1 | 631134 | Rack & Pinion Housing Weldment |
| 2 | 1034199 | Rack & Pinion Chain Shaft |
| 3 | 1012344 | #60 Sprocket, 13 tooth 1" bore (w/pin hole) |
| 4 | 1012729 | Sprocket Shaft |
| 5 | 1012727 | Handle Weldment |
| 6 | 552941 | Tube Guide |
| 7 | 6025A1 | Housing Mount |
| 8 | 5029A1 | Half-Band, 6" wide |
| 9 | 1028818 | Spacer, 1/4" |

1. Locate the center bin well control rod directly above the unloading tube, verify the center well gate is closed. If necessary, drill a 3/8" dia. hole in the center of the control rod, 1/2" from the end of the rod (**NOTE:** some control rods are predrilled and do not require drilling of the hole). Attach the rack & pinion chain shaft to the end of the rod and secure with the 3/8" x 1 1/2" roll pin.
2. Using six 5/16 x 1 1/2" bolts and non-lock nuts, loosely attach the housing mount and 6" wide half-band to the unload tube (the housing assembly will be properly positioned during final assembly).
3. Set the tube guide (with curved side down) on top of the housing mount and place the tail end of the chain shaft onto the guide. Position the half-band and housing mount so the end of the chain shaft is flush with the back side of the housing mount. Secure half-band and housing mount.
4. Attach the handle to the sprocket shaft using one 1/4" x 2" bolt and non-lock nut. Partially insert the shaft into the side of the rack & pinion housing and install the two 1" I.D. flat washers and sprocket (sprocket hub should face towards the handle). Slide the shaft through the other side of the housing and secure the sprocket using the 5/16" x 2 1/4" roll pin.
5. Place a 1/4" spacer washer over each of the four holes on the tube guide and set the sprocket and housing assembly on top of the guide (make sure the teeth of the sprocket are properly positioned in the chain shaft).
7. Secure the assembly using four 3/8" x 1" bolts, lock washers and non-lock nuts.

# BIN WELL
# CONTROL OPERATION

### Open/Close Center Bin Well

1. Verify all bin wells are closed.

   To open the center well gate, turn the handle to pull the center well control pipe out away from the bin, the center well control pipe will slide inside the control pipe for the intermediate well(s).

   To close center bin well, turn handle in the opposite direction.

   **NOTE:** The square attachment on the handle allows the handle to be removed and reinstalled if operation of the handle would otherwise be restricted causing it not to complete a full circle.

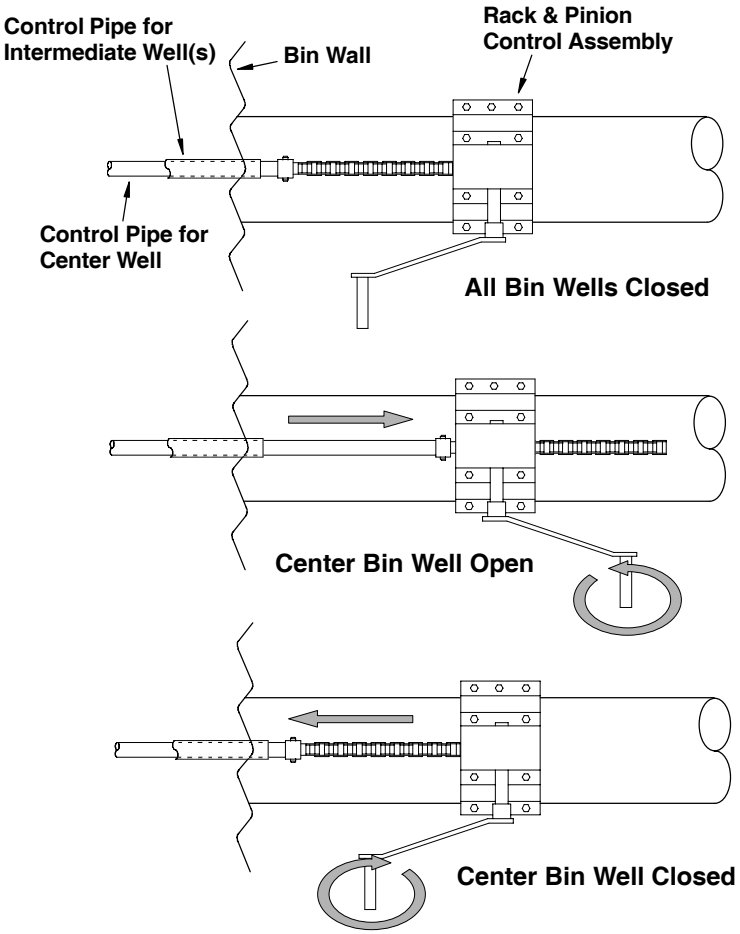


### Intermediate Well Operation

2. To operate the intermediate well gates, fully close the center bin well gate.

   Align the holes in the center well control pipe with the holes in the intermediate well control pipe.

   Install the 5/16" x 2 1/2" bolt through the holes and secure with the 5/16" lock washer and non-lock nut provided.

   Now when the handle is turned, both the center and intermediate well gates will open or close together. Remove the bolt to operate only the center well gate.
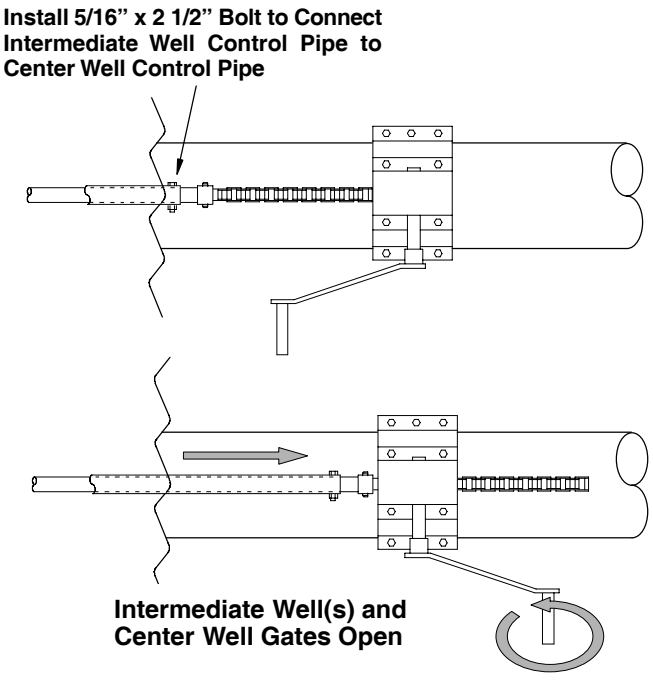
   **NOTE:** Intermediate well(s) should not be opened until the bin has emptied to where grain will no longer flow into the center well.