6", 8" & 10" LOWBOY BIN UNLOADERS

OWNER'S & OPERATOR'S MANUAL

Effective January 23, 2002

Publication No. 1008443

Hutchinson/Mayrath

A Division of **GLOBAL** *Industries, Inc.*

P.O. Box 629 • 514 W. Crawford • Clay Center, KS 67432
Phone 785-632-2161 • 1-800-523-6993 • FAX 785-632-5964

Hutchinson/Mayrath

A Division of **GLOBAL** *Industries, Inc.*

POLICIES AND PROCEDURES

PRICES: Prices in effect at time of shipment will apply. Prices are subject to change without notice. All prices are F.O.B. Clay Center, Kansas. Orders shipped from locations other than Clay Center, Kansas will be subject to additional charges, such as back freight and/or additional freight.

SERVICE CHARGE: A service charge will be assessed on all past due balances as permitted by state law not to exceed 1-1/2% per month.

MINIMUM ORDER: Processing and handling costs necessitate a minimum charge of $15.00 net on all orders.

BACK ORDERS: Back orders will be shipped as they become available. Contact Hutchinson/Mayrath Customer Service for alternative shipping options or if cancellation is desired.

DAMAGED GOODS: It is the consignee's responsibility to check all shipments thoroughly upon receipt of goods. If any damage is discovered, it must be noted on the freight bill of lading before signing. The consignee must make necessary claims against the respective freight line. All damage claims must be submitted within 30 days of delivery receipt.

SHORTAGES: All shortages must be noted at time of delivery receipt. Shortages must be noted on the freight bill of lading before signing. Hutchinson/Mayrath must be advised of all concealed shortages upon discovery. Once notified of concealed shortages Hutchinson/Mayrath will advise corrective action to be taken.

RETURN OF GOODS: All returns must be approved by Hutchinson/Mayrath prior to shipment. All return requests will be issued a return authorization number. NO RETURNS WILL BE ACCEPTED WITHOUT A RETURN AUTHORIZATION NUMBER AND PRIOR AUTHORIZATION FROM THE FACTORY. All returns must be shipped prepaid. A 15% restocking charge will be applied to all returned merchandise. Custom Products may not be returned for credit. Only current products in new and salable condition may be returned. No safety devices may be returned for credit.

MODIFICATIONS: It is the policy of Hutchinson/Mayrath to improve its product whenever possible and practical to do so. We reserve the right to make changes, improvements and modifications at any time without incurring the obligation to make such changes, improvements and modifications on any equipment sold previously.

LIMITED WARRANTY:

(a) For a period of (1) year after receipt of goods by the original consumer buyer, Hutchinson/Mayrath will supply free of charge replacement parts for parts that prove defective in workmanship or material. Defective parts must be returned freight prepaid to a specified Hutchinson/Mayrath location. Only Hutchinson/Mayrath original repair parts may be used for warranty repairs.
(b) This limited warranty does not extend to parts designed to wear in normal operation and be replaced periodically; or to damage caused by negligence, accident, abuse or improper installation or operation.
(c) GOODS NOT MANUFACTURED BY HUTCHINSON/MAYRATH CARRY ONLY THE MANUFACTURER'S WARRANTY.
(d) THIS UNDERTAKING IS IN LIEU OF ALL OTHER WARRANTIES, EXPRESSED OR IMPLIED, INCLUDING MERCHANTABILITY AND FITNESS FOR A PARTICULAR PURPOSE.

FAILURE TO FOLLOW THE INSTRUCTIONS CONTAINED IN THE OWNER'S & OPERATOR'S MANUALS AND THE ITEMS LISTED BELOW WILL RESULT IN THE VOIDING OF THIS LIMITED WARRANTY.

1) Improper assembly, including failure to properly install all safety equipment.
2) Improper installation (power & wiring included).
3) Unauthorized alterations of goods.
4) Goods operated when obviously in need of repair.
5) Use of unauthorized repair parts.
6) Irresponsible operation.
7) Used to handle materials other than free flowing, non-abrasive and dry materials, as intended.
8) Damaged through abusive use or accident.

LIMITATION OF LIABILITY: BUYER AGREES THAT IN NO EVENT SHALL HUTCHINSON/MAYRATH HAVE LIABILITY FOR DIRECT DAMAGES IN EXCESS OF THE CONTRACT PRICE OF THE GOODS IN RESPECT OF WHICH CLAIM IS MADE. BUYER FURTHER AGREES THAT IN NO EVENT SHALL HUTCHINSON/MAYRATH ON ANY CLAIM OF ANY KIND HAVE LIABILITY FOR LOSS OF USE, LOSS OF PROFITS, OR FOR ANY INDIRECT, INCIDENTAL OR CONSEQUENTIAL DAMAGES.

GENERAL SAFETY STATEMENT

This manual was written with the safety of the operator and others who work with the equipment as our prime concern. The instructions presented will help the reader learn SAFE day to day work practices. We want you as our partner in safety.

It is your responsibility as an owner, operator or supervisor to know what specific safety requirements and precautions exist and to make these known to all other personnel working with the equipment or in the area, so that they too may safely perform their duties and avoid any potentially hazardous situations.

Please remember safety equipment provides important protection for persons around a grain handling system that is in operation. Be sure that ALL safety shields and protection devices are installed and properly maintained. If any shields or guards are damaged or missing, contact your dealer to obtain the correct items.

Avoid any alterations of the equipment. Such alterations may create a dangerous situation where serious injury or death may occur.

SAFETY ALERT SYMBOL

The symbol shown below is used to call your attention to instructions concerning your personal safety. Watch this symbol - it points out important safety precautions. It means "ATTENTION! Become alert! Your personal safety is involved!" Read the message that follows and be alert to the possibility of personal injury or death.

BE ALERT! YOUR SAFETY IS INVOLVED.

WARNING

Anyone who will operate or work around this machine shall first read this manual! This manual must be delivered with the equipment to its owner. Failure to read this manual and its safety instructions is a misuse of the equipment.

OPERATOR QUALIFICATIONS

Operation of this auger shall be limited to competent and experienced persons. In addition, anyone who will operate or work the auger must use good common sense. In order to be qualified, he must also know and meet all other requirements, such as:

1. Some regulations specify that no one under the age of 16 may operate power machinery. This includes augers. It is your responsiblity to know what these regulations are in your own area or situation.

2. Current OSHA regulations state in part: "At the time of initial assignment and at least annually thereafter, the employer shall instruct every employee in the safe operation and servicing of all equipment with which the employee is, or will be involved."*

3. Unqualified persons are to stay out of the work area.

4. A person who has not read and understood all operating and safety instructions is not qualified to operate the auger system.

*Federal Occupation Safety & Health Standards for Agriculture Subpart D, Section 1928.57(a)(6).

SIGN OFF SHEET

As a requirement of OSHA it is necessary for the employer to train the employee in the safe operation and safety procedures with this auger. We include this sign off sheet for your convenience and personal record keeping.

DATE	EMPLOYER SIGNATURE	EMPLOYEE SIGNATURE

SAFETY DECALS

Check components as specified below to insure that safety decals are present and in good condition. If a decal cannot be easily read for any reason or has been painted over, replace it immediately. Decals may be ordered through your dealer.

DANGER Sign No. 1002303 was supplied with Hutchinson bin unloading equipment. This safety sign should be applied to the side of the bin near the bin opening, so it will be viewed by people entering into the bin or storage building.

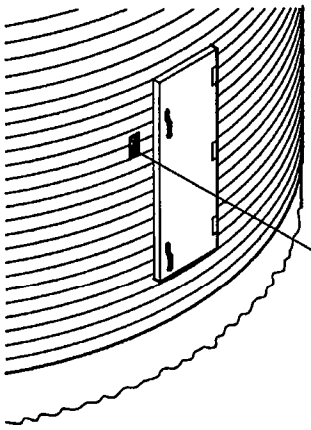

"DANGER" Sign No. 1002303

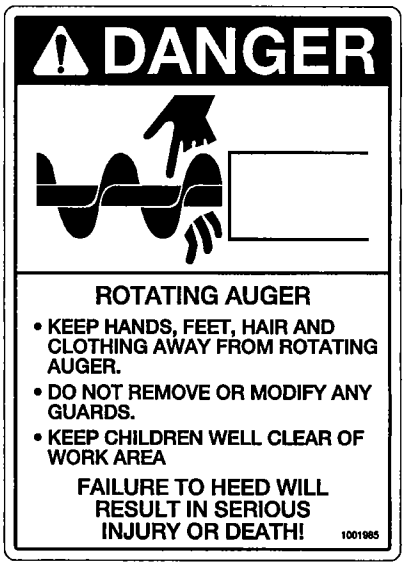

'DANGER" Decal 4-1/2" x 6-1/4"
Part No. 1001985

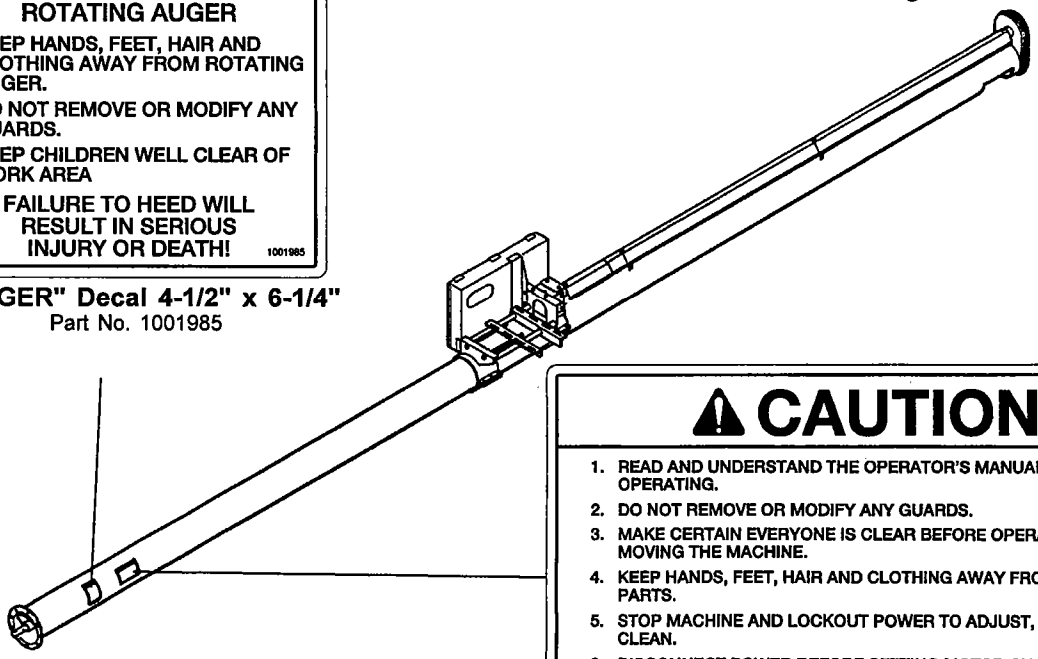

CAUTION

1. READ AND UNDERSTAND THE OPERATOR'S MANUAL BEFORE OPERATING.
2. DO NOT REMOVE OR MODIFY ANY GUARDS.
3. MAKE CERTAIN EVERYONE IS CLEAR BEFORE OPERATING OR MOVING THE MACHINE.
4. KEEP HANDS, FEET, HAIR AND CLOTHING AWAY FROM MOVING PARTS.
5. STOP MACHINE AND LOCKOUT POWER TO ADJUST, SERVICE OR CLEAN.
6. DISCONNECT POWER BEFORE SETTING MOTOR OVERLOAD.
7. MAKE CERTAIN ELECTRIC MOTORS ARE GROUNDED.
8. KEEP CHILDREN WELL CLEAR OF WORK AREA.

1002301

"CAUTION" Decal
Part No. 1002301

WORK AREA SAFETY AND DIAGRAMS

The diagram below will show the manufacturers designated work areas. These areas shall be marked off with colored nylon or plastic rope hung as portable barriers to define the designated work areas.

Under no circumstances should persons not involved in the operation be allowed to trespass into the work area.

It shall be the duty of all operators to see that children and/or other persons stay out of the work area! Trespass into the work area by anyone not involved in the actual operation, or trespass into a hazard area by anyone, shall result in an immediate shutdown by the operator.

It shall be the responsibility of all operators to see that the work area has secure footing, is clean and free of all debris and tools which might cause accidental tripping and/or falling. It shall also be their responsibility to keep the work area clean and orderly during the operation.

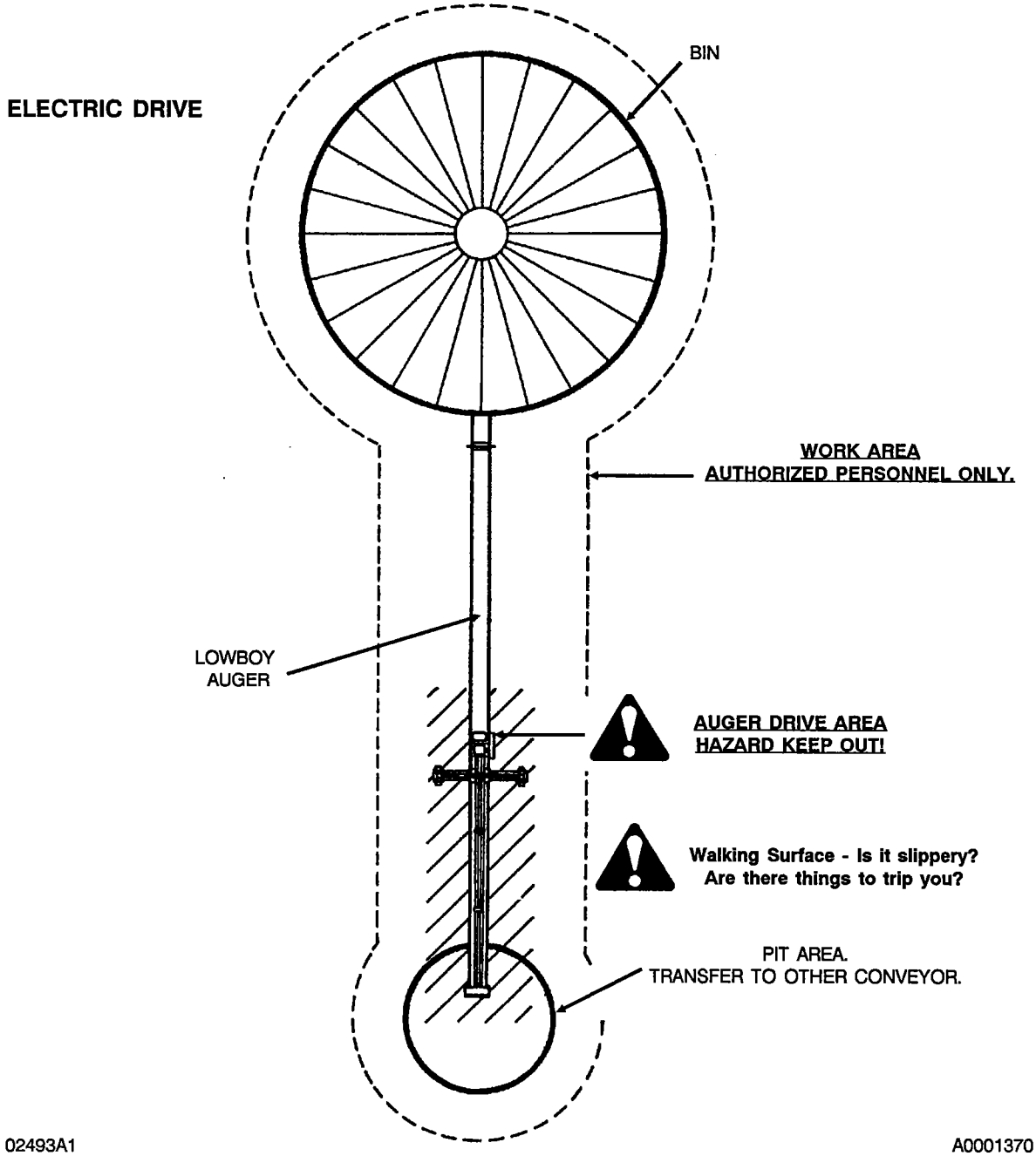

ELECTRIC MOTOR DRIVE AUGERS

Always use a motor with required H.P. suggested in the Horsepower Recommendations section. Use motor that operates at 1750 R.P.M. Motor pulleys are not furnished with the auger.

POWER SOURCE

1. Electric motors and controls shall be installed by a qualified electrician and must meet the standards set by the National Electrical Code and all local and state codes.

2. A magnetic starter should be used to protect your motor when starting and stopping. It should stop the motor in case of power interruption, conductor fault, low voltage, circuit interruption, or motor overload. Then the motor must be restarted manually. Some motors have built-in thermal overload protection. If this type motor is used, use only those with a manual reset.

A main power disconnect switch capable of being locked only in the OFF position shall be provided. This shall be locked whenever work is being done on the auger.

Reset and motor starting controls must be located so that the operator has full view of the entire operation.

LOCKOUT

A main power disconnect switch capable of being locked only in the OFF position shall be provided. This shall be locked whenever work is being done on the auger.

HORSEPOWER RECOMMENDATIONS

Unit Size	Horsepower needed when connected to average size standard unloading system		Horsepower needed when connected to average size standard unloading system	
	HP	LENGTH	HP	LENGTH
6" Use 3.5" Motor Pulley with 12" Driven Pulley Auger Speed 650 RPM	3 HP	20'-30'	5	20'-30'
	5 HP	31'-50'	7 1/2	31'-50'
8" Use 4.5 Motor Pulley with 15" Driven Pulley Auger Speed 520 RPM	5 HP	20'-35'	7 1/2	20'-30'
	7 1/2	36'-50'	10	31'-50'
10" Use 4.2 Motor Pulley with 15" Driven Pulley Auger Speed 490 RPM	7 1/2	20'-30'	15	20'-30'
	10	31'-40'	20	31'-50'
	15	41'-50'		

The horsepower recommendations are for augering reasonably dry grain. High moisture grain (above 15%) will require greater power and maximum possible capacity will be less with high moisture grain than with dry grain.

Use the recommended motor pulley size for the recommended auger speed. Auger speed in excess of recommended speed causes excessive wear.

***Length indicated the length of Lowboy Auger.**

NOTE: For Lowboy lengths over 50' long, consult the factory for horsepower and drive information.

START-UP AND BREAK-IN

Before operating the unit add #90 weight non-foaming oil to the gearbox until it is half full. Check to see that belts are tensioned properly. Make sure all shields are in place and properly adjusted for belt and pulley clearance. Check the assembly instructions to see that all parts are assembled correctly. During the intial start-up and break-in period, the operator shall note any unusual vibrations or noises and take appropriate action. The bin well inside the bin should have a control gate. The controls for the control gate will either pull or push to open, depending on the type of well. The gate should be closed before start-up and closed before shut-down to permit the machine to clean out. Use the control gate to regulate a flow of less then full capacity until several hundred bushels of grain have been augered to polish the flighting assembly and tube.

Any screw conveyor when it is new or after it sets idle for a season should go through a "break-in" period. Augers should be run at partial capacity until the screw becomes polished and smooth before attempting full capacity. A failure will most likely occur when run full before it has "polished up". It is recommended that several hundred bushels of grain be augered at partial capacity.

Never operate augers empty for any length of time as excessive wear will result. If at all possible, do not stop or start augers under load, especially before the flight and tube become well polished, as this may cause the auger to "freeze-up". Continue to use the control gate as a flow control so the Lowboy Auger does not become plugged.

FULL LOAD OPERATION

During the regular operation of your equipment, one person shall be in a position to monitor the operation. It is also good practice to visually inspect the system periodically during the actual operation. Be alert for unusual vibrations, noises and the loosening of any fasteners.

Observe work area restrictions. (See work area diagram.)

SHUTDOWN

A. NORMAL SHUTDOWN

Make certain the bin well control gates and the Lowboy Auger are empty before stopping the unit. Before the operator leaves the work area the power source shall be locked out. See page 5.

B. INTERMITTENT OPERATION SHUTDOWN

Consideration should be given to the proper size auger for a batch drying, or any intermittent type operations. When augers are stopped and restarted under full load, it may result in damage to the auger. Using a larger diameter auger and reducing its load level will be far better than subjecting a smaller diameter auger to high loads. If an auger is kept from absolute filling, it will make start-up easier and convey more efficiently.

In situations where an auger will be pressure-fed at the intake end it is advisable to use a device for restricting the flow. This will keep the tube from filling so full that it tends to "jam" the flighting. Examples of these situations where over-filling can occur: formed hopper pits under storage bins; dump pit to wet holding tank; bulk (hopper bottom) tank unloading. Slide gates and intake control gates can be used in the pressure are.

C. EMERGENCY SHUTDOWN

1. It is essential to inspect your drive before adding power and know how to shut down in an emergency. For efficient and safe operation, be aware of all the adjustments and checks which should be performed.

2. Starting the unit under load may result in damage to the auger. Such damage is considered abuse of the equipment.

3. Should the auger by immediately shut down under load -- disconnect and lockout the power source. Clear as much grain from hopper and auger as you can before attempting a restart.

Whenever you must service or adjust your equipment, make sure you stop motor and <u>lock out your power source!</u>

LUBRICATION AND MAINTENANCE

For economical and efficient operation of your auger maintain regular and correct lubrication. Neglect leads to reduced efficiency, excessive wear and needless down time.

Keep all safety shields and devices in place.
Never clean adjust or lubricate a machine that is in operation.

The following will detail the parts needing lubrication and the various conditions which determine the time span.

GEARBOX

The gearbox is shipped without oil. At field assembly of auger, 90 E.P. (non-foaming) oil is to be added to the gearbox until half full. Check and maintain the level regularly.

ENCLOSED DRIVE LUBRICATION

The enclosed drive is located at the discharge end of the auger housing and is shipped without oil. Oil is to be added to the unit during field assembly of the auger. Oil will dissipate under normal operating conditions, therefore the oil level should be checked regularly. Add 90 DP (non-foaming) oil until the level of the oil reaches the check port.
DO NOT ADD MORE OIL THAN RECOMMENDED. ADDITIONAL OIL MAY DAMAGE THE SEALS OR BE FORCED OUT THROUGH THE VENTED PLUG.

For lubrication in formal operating temperature between 40° F to 120° F, we recommend the use of non-foaming, multi-purpose gear oil, SAE 90 weight. For temperatures below 40° F, use SAE 80 weight oil. Use grade commercially available for automotive differentials. Extra pressure additives may be of value in severe applications.

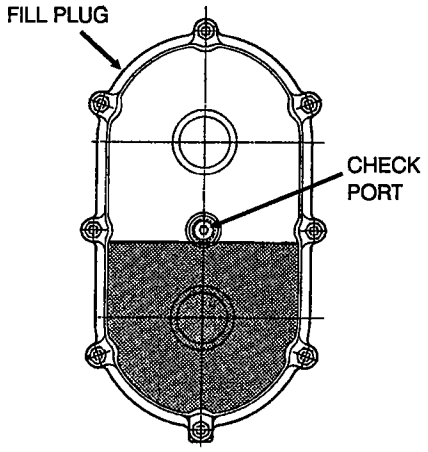

6" Unit

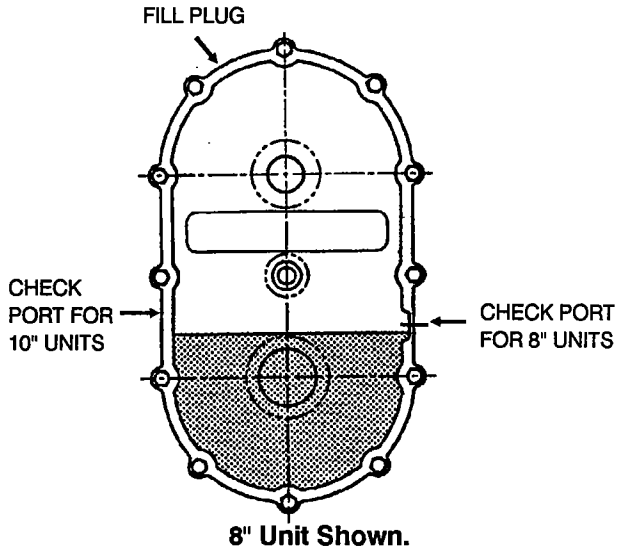

8" Unit Shown.
On 10" units, the check port is on the other side.

BEARINGS

DRIVE SHAFT BEARING

All drive shafts are supported by self-aligning, sealed ball bearings, which have been packed at the factory and require no further lubrication. There is no adjustment to be made to the bearings but to check that the retainers are firmly fastened to the bearing stand. Also check that the setscrews in the lock collars are tight against the drive shaft, securing the lock collars to the drive shaft.

IMPORTANT: The complete drive shaft must be shielded with drive shaft covers during operation.

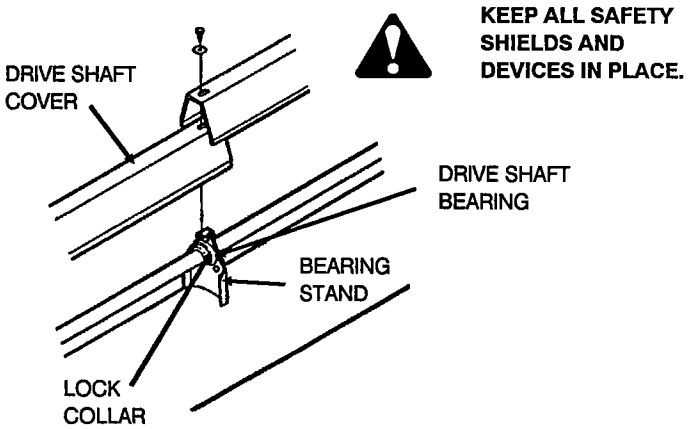

BELT ADJUSTMENT

On drives that are powered by belts, the belt tension will need periodic adjustment.

TROUBLE SHOOTING

LOWBOY CAPACITY

The auger may not be getting enough grain. Check to see that the bin well control gate is sufficiently open. Check auger speed. Refer to page 6. Slow speed below recommended speed will result in low capacity.

AUGER PLUGS

The auger may be getting too much grain where it is "jamming" inside the housing. Adjust control gate of bin well to decrease amount of grain being fed into auger.

On motor drive augers, the motor may be too small or wired improperly.

If wet grain or other hard to move material is being augered, use a larger size motor than recommended for normal use.

Is the auger free of any foreign material, such as sacks, tarp corners, etc. A plug of the discharge end will cause an auger plug.

Check to see if belts are lined up and tensioned properly.

EXCESSIVE AUGER NOISE

Damage can occur to the auger flighting, thus causing noise. Damage usually occurs because of foreign material having been run through the auger. It may be necessary to remove the flighting for inspection.

IMPORTANT:

An auger should be frequently checked and serviced to operate freely. Keep all guards and shields in place. Replace any that are damaged or lost. An auger should be run partially full for several hundred bushels to polish the flighting when it has not been used for an extended period of time. An auger with flighting that has not been polished in this manner requires greater horsepower, and damage to the drive and/or flighting can result if overloaded.

Hutchinson augers are well made and we are proud of our line of equipment. We would like you, as our customer, to do your part in using caution and good judgement in using our equipment as well as any other machinery. Any parts for replacement should be replaced with parts of the same type and size. Do not modify or alter any of the auger components.

ASSEMBLY INSTRUCTIONS

Choose an area of open ground where the auger may be laid out full length. If more than one section of auger housing will be used, lay the different sections in their approximate positions.

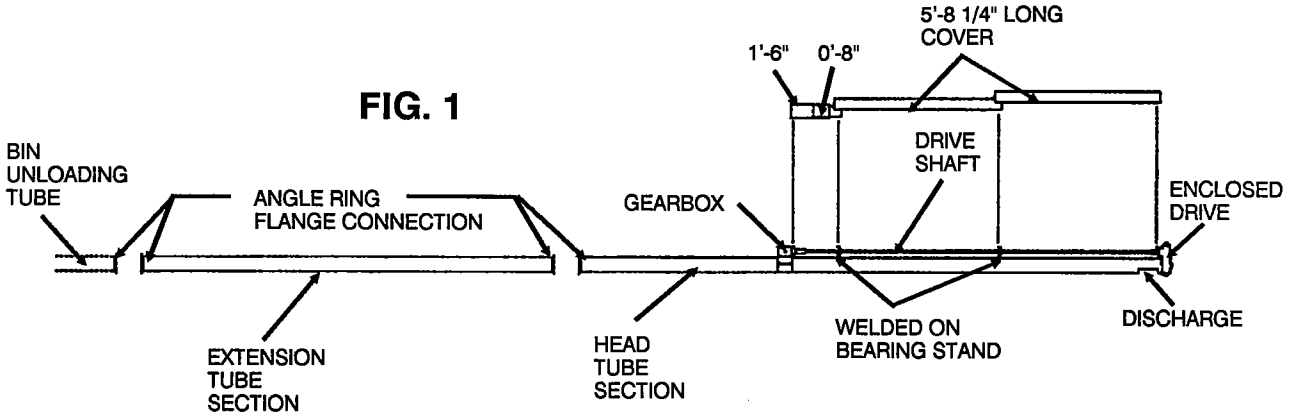

FIG. 1

Lowboy units over 30' long will have a head tube section and an extension tube section. Fasten the flight section together with hex head capscrews and nuts. (See chart for bolt size.) Then connect the head tube section flange to extension tube section flange with hex head capscrews and locknuts. (See chart for bolt size.)

UNIT	FLIGHT CONNECTION BOLTS	TUBE SECTION FLANGE BOLTS
6"	(6) 5/16" x 3/4" HHCS	(4) 3/8" x 1 3/4" HHCS
8"	(8) 5/16" x 3/4" HHCS	(4) 7/16" x 2 1/2" HHCS
10"	(8) 3/8" x 1" HHCS	(4) 1/2" x 3 3/4" HHCS

GEARBOX ASSEMBLY

NOTE: If an optional drive shaft extension kit is to be installed, do it at this time. See instructions provided with the drive shaft kit.

Gearboxes are equipped with two oil fill plugs and are shipped without oil. One plug is vented and must always be on the top side of the box. **IMPORTANT: ADD 90 EP (non-foaming) oil until the gearbox is half full.**

Attach gearbox to band-on mount with four 3/8" x 3/4" hex head capscrews and lockwashers.

Set gearbox on auger and connect to drive shaft with coupler and two 1/4" x 1 1/2" long square keys. (See Fig. 2.)

Secure gearbox mount to auger using halfband and four 5/16" x 1 1/2" hex head capscrews and locknuts.

Attach the drive shaft cover bracket to top of gearbox with two 3/8" x 3/4" hex head capscrews with lockwashers.

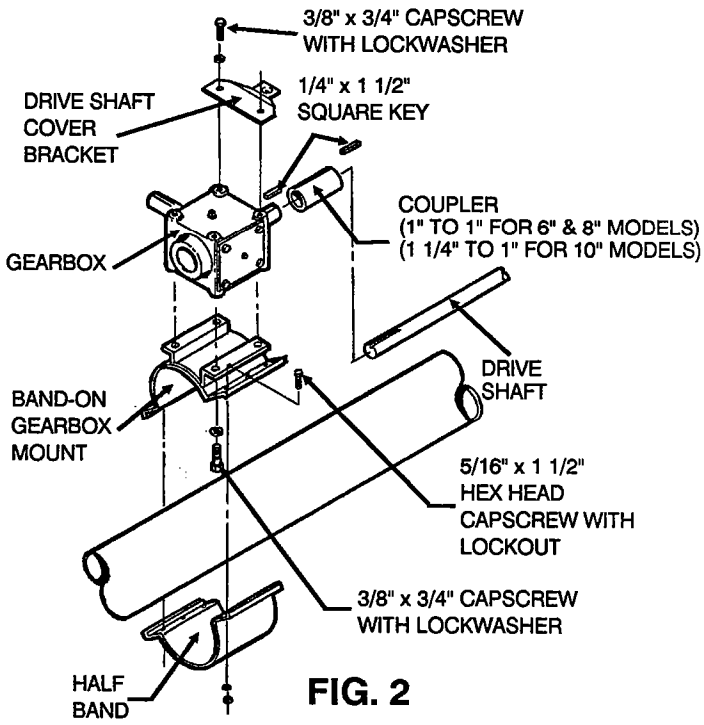

FIG. 2

DRIVE SHAFT COVERS

PLEASE REMEMBER THESE COVERS PROVIDE IMPORTANT PROTECTION FOR PERSONS AROUND AN AUGER THAT IS IN OPERATION. Proper installation is important.

Determine the location of the various lengths of drive shaft covers by placing them alongside the tube assembly in the order shown in Fig. 1 on Page 9. Begin at the intake end of unit. Work up the unit, overlapping covers at each bearing stand.

TO INSTALL TWO-PIECE DRIVE SHAFT COVER

There is a special two piece section of drive shaft cover that installs between the gearbox and the first bearing stand. It telescopes together to vary in length. This telescoping cover consists of a standard piece that telescopies into a special piece of cover with retaining bottom edges. Center the slots in the covers over the hole in the mounting bracket. Place 1" O.D. flat washer over the slot in the cover and drive the self tapping slotted hex head screw through the hole in the mounting bracket. Tighten the metal screw down to the flat washer and cover. **DO NOT** over tighten and strip out the hole in the mounting bracket. See Fig. 3.

CAUTION: THE TWO PIECE TELESCOPING COVER SHOULD OVERLAP AT LEAST 6" FOR PROPER INSTALLATION.

TO INSTALL ONE-PIECE DRIVE SHAFT COVER

Center the slots in the covers over the hole in the mounting bracket. Place 1" O.D. flat washer over the slot in the cover, and drive the self tapping slotted hex head screw through the hole in the mounting bracket. Tighten the metal screw down to the flat washer and metal cover. **DO NOT** over tighten and strip out the hole in the mounting bracket. See Fig. 3.

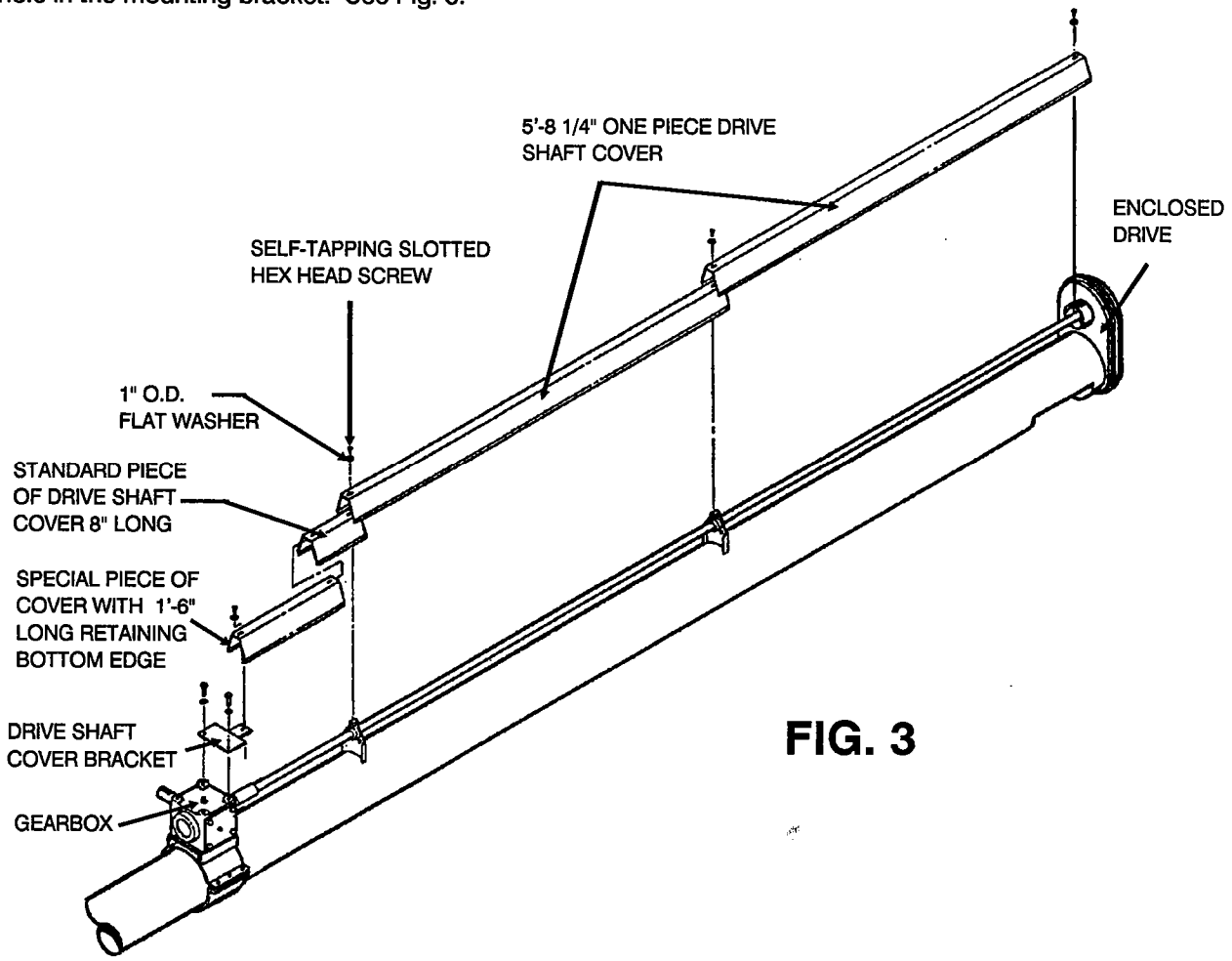

FIG. 3

ELECTRIC MOTOR DRIVE ASSEMBLY

Assemble electric motor mount as shown in Fig. 4. See page 5 in the Operating Procedure portion of this manual for motor size and motor sheave size.

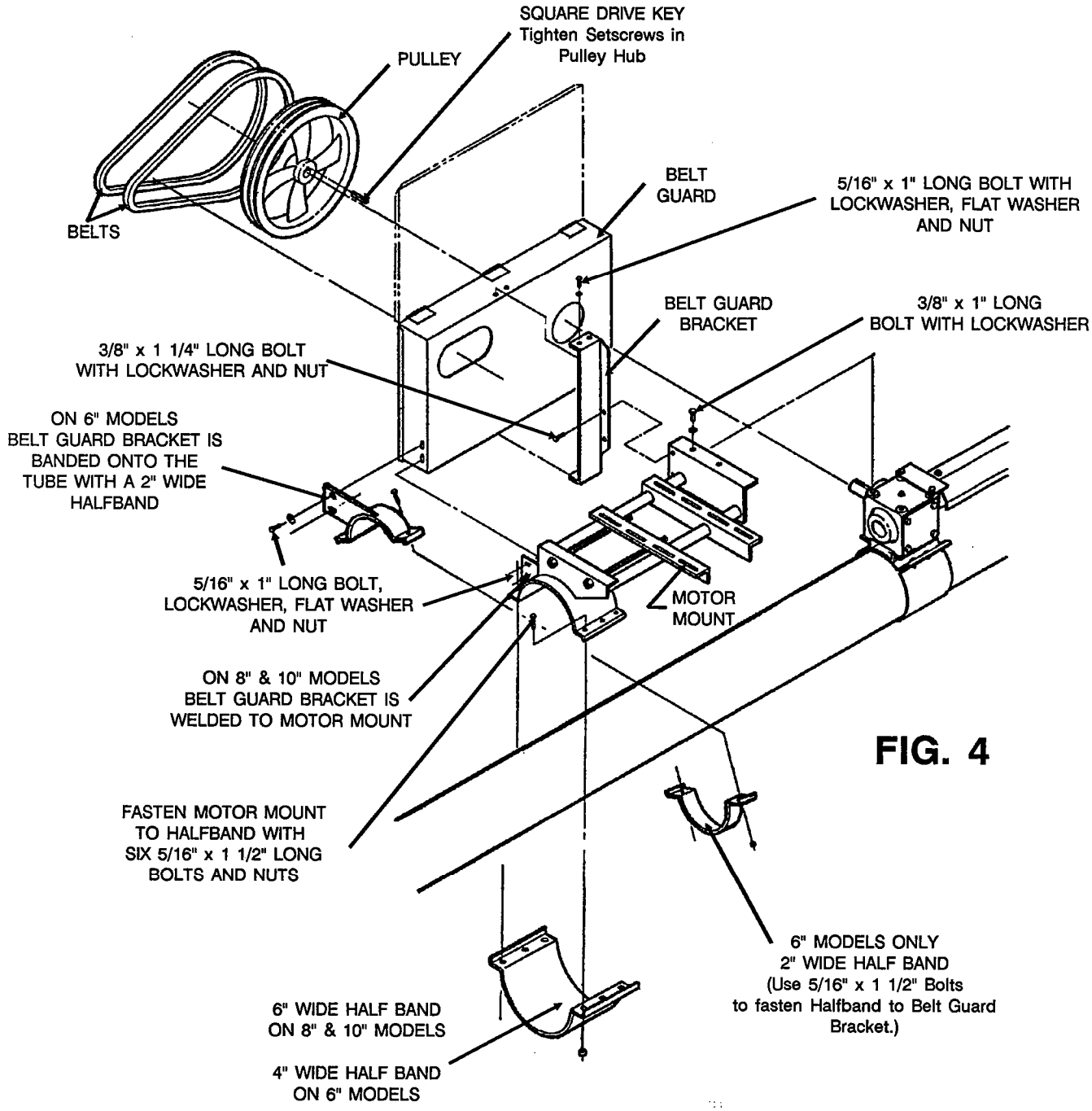

FIG. 4

OPTIONAL UNDERCARRIAGE ASSEMBLY

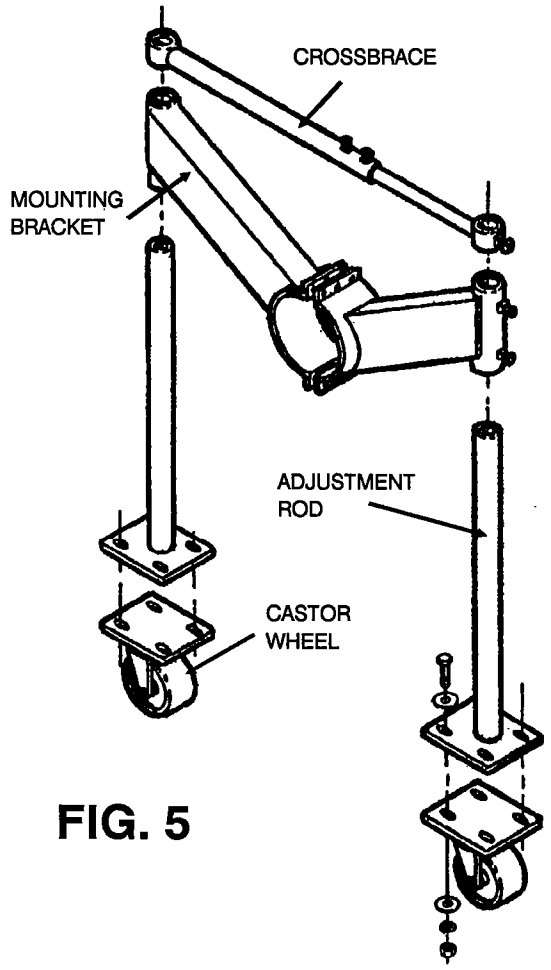

FIG. 5

Assemble the undercarriage as shown in Fig. 5. Bolt undercarriage to auger at about the center of the auger with 5/16" x 1 1/2" bolts and nuts.

NOTE: It may be necessary to remove a metal drive shaft cover to install undercarriage. BE SURE cover is replaced after undercarriage is attached.

LOWBOY AUGER TO UNLOADING TUBE ASSEMBLY

Attach flight of the auger assembly to the bin unloading flight using bolts recommended.

6" One 5/16" x 1 1/2" and one 3/8" x 1 3/4" long black hardened bolt and lock nut.
8" Four 7/16" x 2 1/2" long black hardened bolts and locknuts.
10" Four 1/2" x 3 1/4" long black hardened bolts and locknuts.

Slide unloading flight into unloading tube. Attach the auger to the unloading tube flange using 5/16" x 3/4" bolts, lock washers and nuts. Adjust the undercarriage to support the auger at a level equal to the power sweep unloaders.

POWER SWEEP APPLICATIONS

(Requires optional adapter connecting stub.)

The lowboy augers can be attached to power sweep units, by installing a square to round adapter connecting stub into the end of the auger flight.

Attach the lowboy auger to the unloading tube and flight. The square stub slips into the flight shaft of the unload auger and the housing flanges of the auger and unloader bolt together. Adjust the undercarriage to support the auger at a level equal to the power sweep unloader.

LOWBOY UNLOADING AUGER PARTS LIST

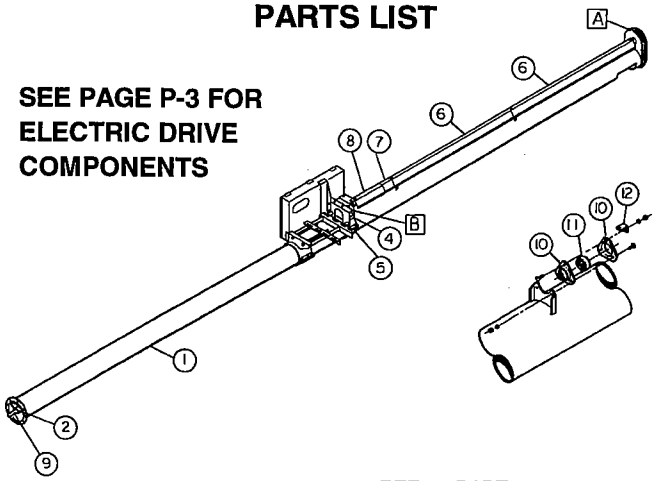

SEE PAGE P-3 FOR ELECTRIC DRIVE COMPONENTS

TYP. BEARING STAND

REF. NO.	PART NO.	DESCRIPTION
A		Enclosed Drive Assembly
	1006251	f/6" - (See below for parts breakdown.)
	631368	f/8" - (See page P-4 or P-5 for parts breakdown.)
	1001495	f/10" - (See page P-4 or P-5 for parts breakdown.)
B		Gearbox Assembly
	1001592	f/6" & 8" units - (See page P-3 for parts breakdown.)
	1006130	f/10" units - (See page P-3 for parts breakdown.)
1	---	Tube Housing - (Consult the factory, provide tube length.)
2	---	Flight Assembly - (Consult the factory and provide flight length.)
3	1002451	Drive Shaft (1" dia. x 12'-3" long)
4		Gearbox Mount
	6024A1	f/6"
	1002718	f/8"
	1003245	f/10"
5		Halfband for Gearbox Mount
	5028A1	f/6"
	5029A1	f/8"
	106255	f/10"
6	550651	Drive Shaft Cover - 5'-8 1/4" long
7	550644	Drive Shaft Cover - 0'-8" long
8	550646	Drive Shaft Cover - 1'-6" long w/Retaining Lip on Bottom
9		Connecting Stub
	6312L	f/6" Lowboy Auger to Bin Unloading Flight
	1722C	f/6" Lowboy Auger Head Section to Lowboy Extension Section
	8320A	f/8"
	2131C	f/10"
10	6382C	Drive Shaft Bearing
11	54008	Flangette f/Bearing
12	54584	Drive Shaft Cover Mounting Clip

A ENCLOSED HEAD DRIVE ASSEMBLIES

REF NO.	PART NO.	DESCRIPTION
1	638080-1	Aluminum Casting
2	638081-1	Aluminum Casting - Cover
3	1006250	# 60 Roller Chain - 32 pitch
4	638088	Gasket
5	842065	3/8" Plug - Vented
6	835174	1" Bearing Cone (Timken No. 07100)
7	835174	1" Bearing Cone (Timken No. 07100)
8	635049-1	1" Bore Sprocket - 15 tooth
9	1005165	Stubs Shaft 1" x 8 1/4"
10	553628	Stub Shaft 1" x 6 1/8"
11	835176-1	1" Bore Sprocket - 19 tooth
12	33046	5/16" x 1" HHCS
13	33144	5/16" Lockwasher
14	33203	3/8" x 2 1/2" Roll Pin
15	835169	Screw Shaft Seal - 1"
16	835169	Drive Shaft Seal - 1"
17	4020A1	Key
18	842083	Drain Plug - 1/4"
19	835175	1" Bearing Cup (Timken No. 07204)
20	835175	1" Bearing Cup (Timken No. 07204)
21	4542	1" Bearing Spacer
22	1001438	3/8" Pipe Plug
23	*553630	Drive Shaft Mounting Clip
24	*33183	Self-Taping Screw
25	*1002382	4" Long Coupler
26	*8371C	Key 1/4" x 1 1/2"
27	1001131	Decal - Notice Oil Level

6" ENCLOSED DRIVE COMPLETE ASSEMBLY NO. 1006251 RATIO 1 TO 1.27

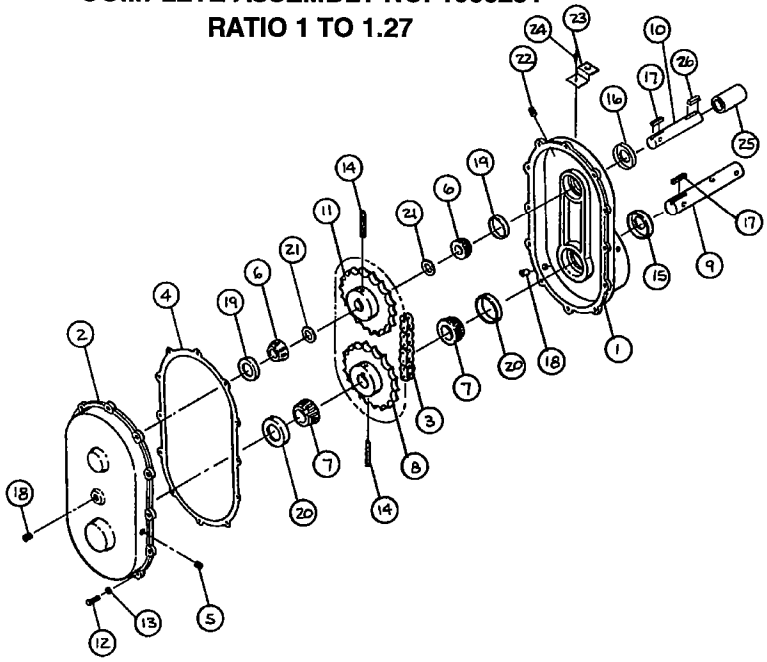

*Indicates items that are not part of the assembly number. These items are sold separately.

LOWBOY UNLOADING AUGER
PARTS LIST

A ENCLOSED HEAD DRIVE ASSEMBLIES - CONT.

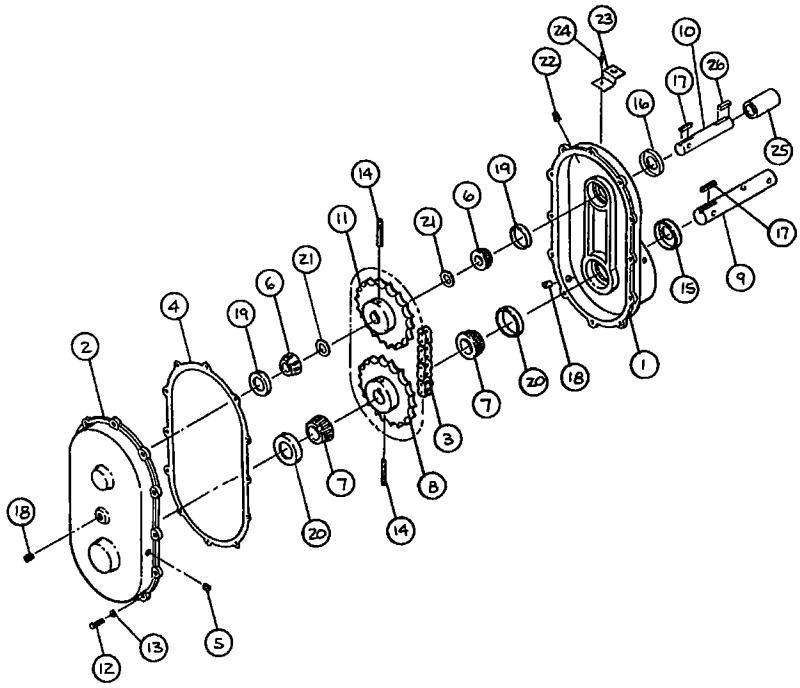

REF NO.	PART NO.	DESCRIPTION
1	1001439	Aluminum Casting
2	842033-2	Aluminum Casting - Cover
3	842064	# 60 Roller Chain - 38 pitch
4	842035	Gasket
5	458026	3/8" Plug
6	835174	1" Bearing Cone (Timken No. 07100)
7	106322	1 1/4" Bearing Cone (Timken No. 15123)
8	40039	1 1/4" Bore Sprocket - 19 tooth
9	553629	Stubs Shaft 1 1/4"
10	553628	Stub Shaft 1"
11	835176-1	1" Bore Sprocket - 19 tooth
12	33046	5/16" x 1" HHCS
13	33144	5/16" Lockwasher
14	33203	3/8" x 2 1/2" Roll Pin
15	835168	Screw Shaft Seal - 1 1/4"
16	835169	Drive Shaft Seal - 1"
17	4020A1	Key
18	842083	Drain Plug - 1/4"
19	835175	1" Bearing Cup (Timken No. 07204)
20	106323	1 1/4" Bearing Cup (Timken No. 15245)
21	4542	1" Bearing Spacer
22	1001438	3/8" Pipe Plug (Vented)
23	*553630	Drive Shaft Mounting Clip
24	*33183	Self-Taping Screw
25	*1002382	4" Long Coupler
26	*8371C	Key 1/4" x 1 1/2"
27	1001131	Decal - Notice Oil Level

REF NO.	PART NO.	DESCRIPTION
1	1001523	Aluminum Casting
2	1001522	Aluminum Casting - Cover
3	41380	# 80 Roller Chain - 34 Pitch
4	1001573	Gasket
5	458026	3/8" Plug
6	106322	1 1/4" Bearing Cone (Timken No. 15123)
7	035439	1 1/2" Bearing Cone (Timken No. LM29749)
8	1001576	1 1/2" Bore Sprocket - 17 tooth
9	1001574	Stubs Output Shaft - 1 1/2"
10	1001575	Stub Input Shaft 1 1/4"
11	1002299	1 1/4" Bore Sprocket - 17 tooth
12	4727-1	5/16" x 1 1/4" HHCS
13	33144	5/16" Lockwasher
14	33190	5/16" x 2 1/2" Roll Pin
15	035860	Output Shaft Seal - 1 1/2"
16	835168	Input Shaft Seal - 1 1/4"
17A	4020A1	Square Key 1/4" x 1"
17B	1002276	Square Key 3/8" x 1"
18	458026	Drain Plug - 3/8"
19	106323	1 1/4" Bearing Cup (Timken No. 15245)
20	035440	1 1/2" Bearing Cup (Timken No. LM29710)
22	1001438	3/8" Pipe (Vented plug)
23	*553630	Drive Shaft Mounting Clip
24	*33183	Self-Taping Screw
25	*1002383	4" Long Coupler
26	*8371C	Key 1/4" x 1 1/2"
27	1002275	Decal- Notice Oil Level

*Indicates items that are not part of the assembly number.
These items are sold separately.

ELECTRIC DRIVE COMPONENTS

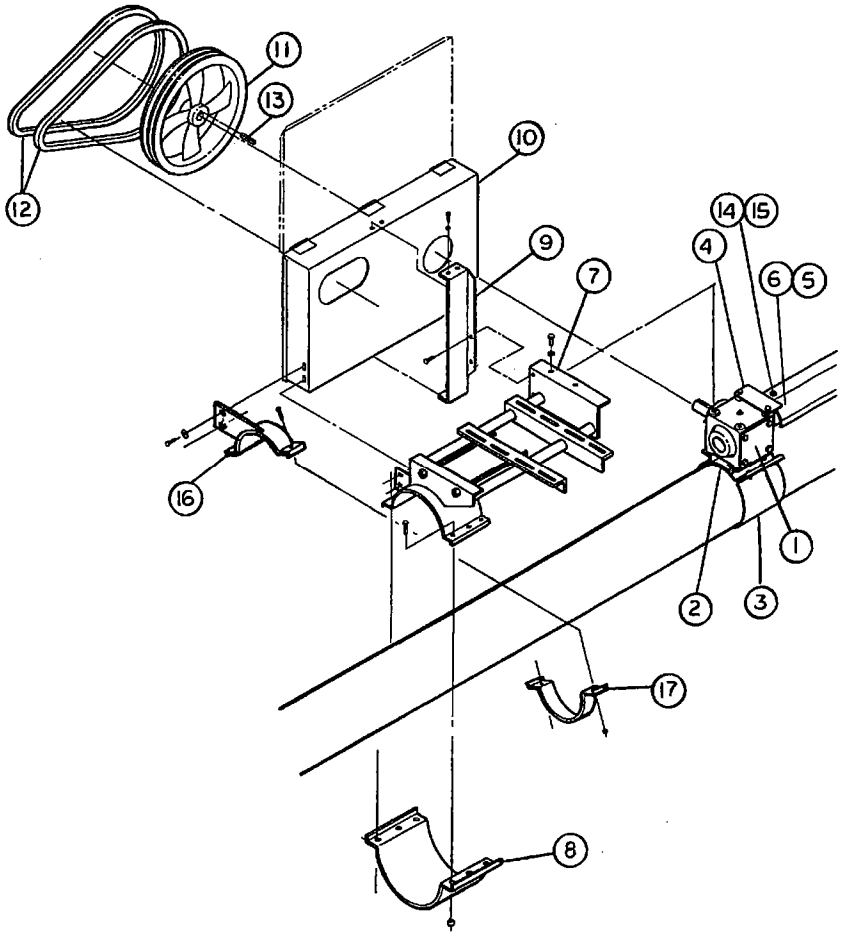

REF. NO.	PART NO.	DESCRIPTION
1		Gearbox
	1001592	f/6" & 8"
	1006130	f/10"
2		Gearbox Mount
	6024A1	f/6"
	1002718	f/8"
	103245	f/10"
3		Half Band for Gearbox
	5028A1	f/6"
	5029A1	f/8"
	106255	f/10"
4		Drive Shaft Cover Bracket
	1002603	f/6" & 8"
	1002604	f/10"
5		Drive Shaft to Gearbox Coupler
	1002382	f/6" & 8" (1" to 1")
	1002383	f/10" (1 1/4" to 1")
6	8371C	Square Key 1/4" x 1 1/2"
7		Motor Mount Frame
	1005289	f/6"
	1002749	f/8"
	1002751	f/10"
8		Half Band for Motor Mount Frame
	5046A1	f/6"
	5029A1	f/8"
	106225	f/All 10"

REF. NO.	PART NO.	DESCRIPTION
9		Belt Guard Mount Bracket
	1002760	f/6" & 8"
	1002774	f/10"
10		Belt Guard
	1002747	f/6" & 8"
	1002748	f/10"
11	40151	Aluminum Sheave 2B 12" - 1" Bore f/6"
11	40157	Aluminum Sheave 2B 15" - 1" Bore f/8"
11	40161	Aluminum Sheave 3B 15" - 1 1/4" Bore f/10"
11	3092A1	QD Sheave 4B 15" f/10"
--	3085A1	QD Bushing SF 1 1/4" Bore
12	40120	Belt B-57 f/6"
12	40122	Belt B-62 f/8" & 10" w/3B Sheave
12	40124	Belt B-66 f/10" w/4B Sheave
13	4046A1	Square Key 1/4" x 3"
14	33183	Sheet Metal Screw
15	33020	Washer 1" O.D. x 1/4" I.D.
16	1005292	Belt Guard Mounting Bracket (used on 6" Models only)
17	5048A1	2" wide Half Band (used on 6" Models only)

B GEARBOX COMPONENTS FOR GEARBOX 1001592

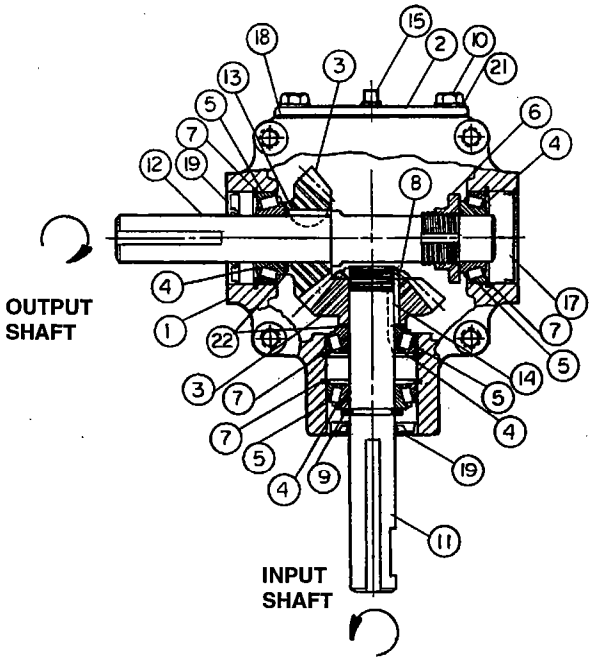

This gearbox is purchased from NECO. The word "NECO" is in raised letters on the housing.

USED ON 6" & 8" LOWBOY
1" DIA. INPUT SHAFT - 1" DIA. OUTPUT SHAFT
3/8" MOUNTING HOLES
4 1/4" SQUARE MOUNTING PATTERN
RATIO 1 TO 1

REF. NO.	QTY. REQ'D.	PART NO.	DESCRIPTION
1	1	837061	Housing
2	1	837062	Cover
3	2	837129	Forged Bevel Gear Tooth
4	4	837019	Brg. Cone L44643
5	4	837020	Brg. Cup L44610
6	1	837028	Stake Nut 1 1/8 - 18 Thd.
7	4	837067	Snap Ring
8	1	837130	Stake Nut 1 - 18 Thd.
9	1	837069	Snap Ring
10	4	4701-1	Bolt (5/16" x 3/4" HHCS Gr. 5)
11	1	1001701	Input Shaft
12	1	1001700	Output Shaft
13	1	003277	Key Woodruff - 1 1/4" x 7/8"
14	1	020153	Key 1/4" Square x 7/8" long
15	1	020009	Level Plug
16*	1	020009	Drain Plug
17	1	837231	Cap
18	1	837072	Gasket
19	2	837013	Seal
20*	1	035916	Vent Plug 1/4" Sq. Head
21	4	33144	5/16" Lock Washer
22	2	035594	Washer 1 1/2" O.D. x 1 I.D. x 10 ga.

*Not Shown

B GEARBOX COMPONENTS FOR GEARBOX 1006130

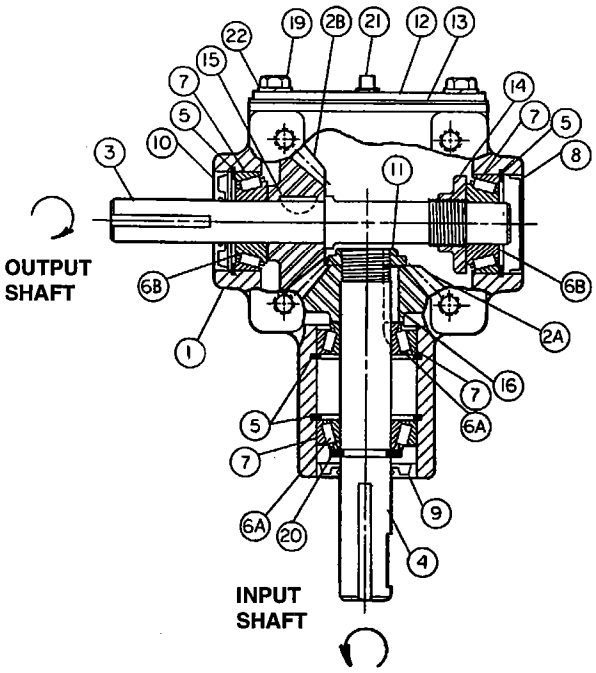

The gearbox is purchased from NECO. The word "NECO is in raised letters on the housing.

USED ON 10" LOWBOY
1 1/4" DIA. INPUT SHAFT - 1 1/4" DIA. OUTPUT SHAFT
3/8" MOUNTING HOLES - 4" SQ. MOUNTING PATTERN
RATIO 1 TO 1

REF. NO.	QTY. REQ'D.	PART NO.	DESCRIPTION
1	1	837060	Housing A101
2A	1	837044	Gear 14 Tooth - 1 1/4"
2B	1	837044	Gear 14 Tooth - 1 1/4"
3	1	1006463	Shaft Output - 1 1/4"
4	1	1001696	Shaft Input - 1 1/4"
5	4	837023	Snap Ring
6A	2	837045	Bearing Cone 15126
6B	2	837045	Bearing Cone 15126
7	4	106323	Bearing Cup 15245
8	1	837024	Cap
9	1	035245	Seal Input - 1 1/4" I.D.
10	1	035245	Seal Output - 1 1/4" I.D.
11	1	837028	Stake Nut - 1 1/8"
12	1	855019	Cover
13	1	837027	Gasket
14	1	837046	Stake Nut - 1 3/8"
15	1	837029	Key Woodruff - 1/4" x 1 1/8"
16	1	020153	Key 1/4 x 1/4 x 7/8
17	1	020009	Level Plug
18	1	035926	Vent Plug
19	4	4701-1	Cap Screw 5/16 x 18 x 3/4
20	1	003381	Snap Ring
21	1	003490	Drain Plug
22	4	33144	Lock Washer 5/16

B GEARBOX COMPONENTS FOR GEARBOX 1001592-1

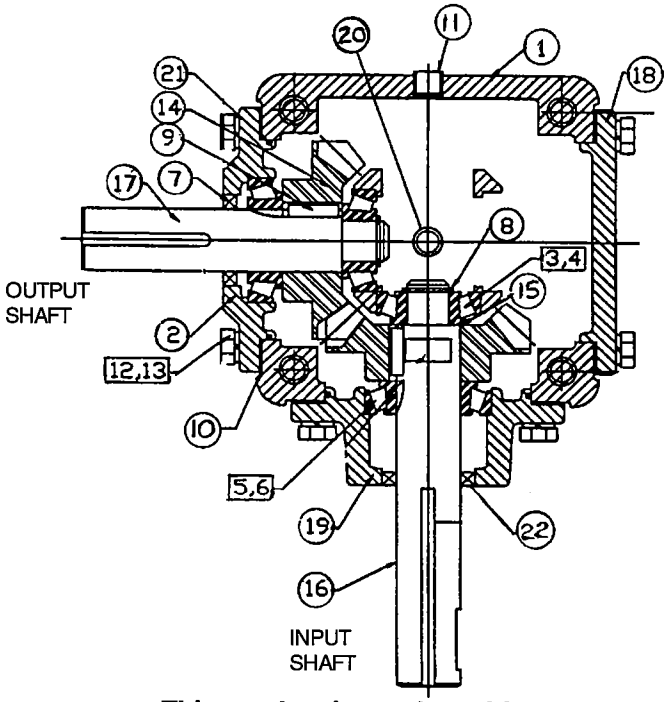

This gearbox is purchased from Weasler. The word "CHINA" will be inscribed on the housing.

1" DIA. INPUT SHAFT - 1" DIA. OUTPUT SHAFT
3/8" MOUNTING HOLES
4 1/4" SQUARE MOUNTING PATTERN
RATIO 1 TO 1

REF. NO.	QTY. REQ'D.	PART NO.	DESCRIPTION
1	1	1023564	Case
2	1	10233565	End Cap
3	2	40388	Brg. Cone (LM11749)
4	2	40389	Brg. Cup (LM11710)
5	2	40377	Brg. Cone (LM44643)
6	2	40378	Brg. Cup (LM44610)
7	2	1023280	Seal (Nat. # 470553)
8	2	1023566	Snap Ring
9	2	020153	Square Key 1/4" x 7/8" lg.
10	A/R	1023289	Shim Kit
11	2	020009	1/4" Pipe Plug
12	8	4701-1	5/16" x 3/4" NC Capscrew
13	8	33144	5/16" Lockwasher
14	2	1023286	Gear 90° Bevel - 19 tooth
15	2	1023567	Spacer
16*	1	1023568	Input Shaft
17	1	1023569	Output Shaft
18	1	1023570	Cover
19	1	1023571	Quill
20	1	035916	1/4" Vented Plug
21	2	1023282	O-Ring (3.15" O.D.)
22	1	1023281	Seal (2" O.D.)

B GEARBOX COMPONENTS FOR GEARBOX 1006130-1

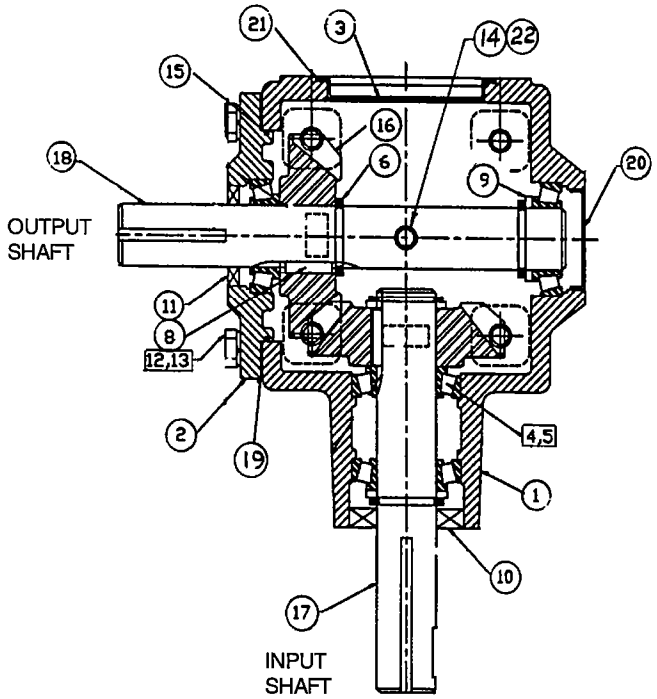

The gearbox is purchased from Weasler. The word "CHINA" will be inscribed on the housing.

1 1/4" DIA. INPUT SHAFT - 1 1/4" DIA. OUTPUT SHAFT
3/8" MOUNTING HOLES - 4" SQ. MOUNTING PATTERN
RATIO 1 TO 1

REF. NO.	QTY. REQ'D.	PART NO.	DESCRIPTION
1	1	1023572	Case
2	1	1023573	End Cap
3	1	1023574	Large Cover
4	4	3079R1	Brg. Cone (LM57048)
5	4	3148R1	Brg. Cup (LM67010)
6	4	003538	Snap Ring
8	2	020153	Square Key 1/4" x 7/8" lg.
9	3	1023527	Spacer.
10	1	1023278	Seal (Nat. # 471808).
11	1	1012279	Seal (Nat. # 470163)
12	4	33060	3/8" x 1" NC Capscrew
13	4	D1150	3/8" Lockwasher
14	1	020009	1/4" Pipe Plug
15	1	1023282	O-Ring (3.15" O.D.)
16	2	1023287	Gear 90° Bevel - 17 tooth
17	1	1023575	Input Shaft
18	1	1023576	Output Shaft
19	A/R	1023288	Shim Kit
20	1	1023577	Small Cover
21	1	1023578	Gasket Cover
22	1	035916	1/4" Vented Plug

LOWBOY UNLOADING AUGER
PARTS LIST

OPTIONAL UNDECARRIAGE COMPONENTS

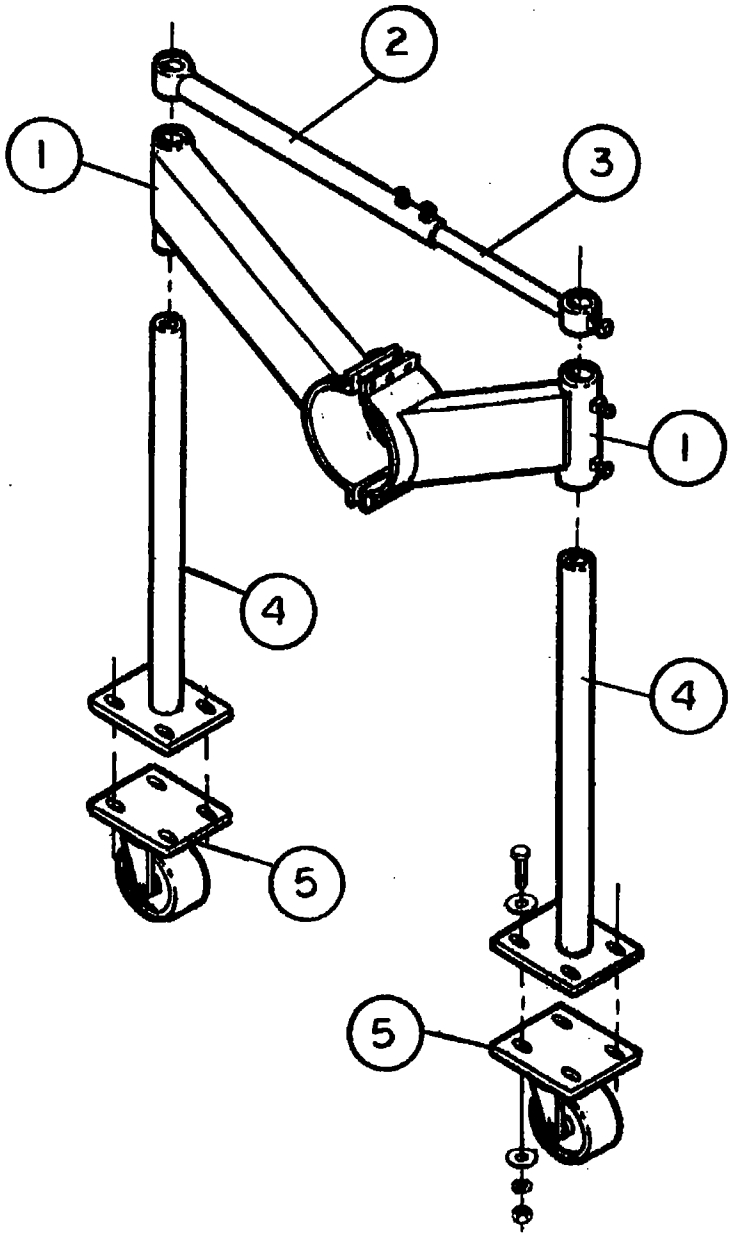

REF. NO.	PART NO.	DESCRIPTION
1	- - -	Mounting Bracket
	6386E	f/6"
	6387E	f/8"
	6315A1	f/10"
2	6389E	Spacer Bar (outer tube)
3	6390E	Spacer Bar (inner tube)
4	6385E	Leg Weldment
5	6383E	Castor Wheel Assembly

Hutchinson/Mayrath

A Division of **GLOBAL** *Industries, Inc.*

P.O. Box 629 514 W. Crawford Clay Center, KS 67432
Phone 785-632-2161 1-800-523-6993 FAX 785-632-5964