Field Loader S-Drive

Portable Grain Belt Conveyor Assembly Manual

This manual applies to the following brands and models:
BCX^2 1539, BCX^2 1549
WCX^2 1539, WCX^2 1549
HCX^2 1549

Original Instructions

Read this manual before using product. Failure to follow instructions and safety precautions can result in serious injury, death, or property damage. Keep manual for future reference.

Part Number: P1512159 R2

Revised: Sep 2019

New in this Manual

The following changes have been made in this revision of the manual:

Description	Section
Inserted correct tube layout diagram for HCX 1549 model	Figure 13 on page 33

CONTENTS

1. Safety

1.1. Safety Alert Symbol and Signal Words

This safety alert symbol indicates important safety messages in this manual. When you see this symbol, be alert to the possibility of injury or death, carefully read the message that follows, and inform others.

Signal Words: Note the use of the signal words **DANGER**, **WARNING**, **CAUTION**, and **NOTICE** with the safety messages. The appropriate signal word for each message has been selected using the definitions below as a guideline.

DANGER Indicates an imminently hazardous situation that, if not avoided, will result in serious injury or death.

WARNING Indicates a hazardous situation that, if not avoided, could result in serious injury or death.

CAUTION Indicates a hazardous situation that, if not avoided, may result in minor or moderate injury.

NOTICE Indicates a potentially hazardous situation that, if not avoided, may result in property damage.

1.2. General Product Safety

YOU are responsible for the **SAFE** use and maintenance of your conveyor. **YOU** must ensure that you and anyone else who is going to work around the conveyor understands all procedures and related **SAFETY** information contained in this manual.

Remember, **YOU** are the key to safety. Good safety practices not only protect you, but also the people around you. Make these practices a working part of your safety program. All accidents can be avoided.

- It is the conveyor owner, operator, and maintenance personnel's responsibility to read and understand **ALL** safety instructions, safety decals, and manuals and follow them when operating, or maintaining the equipment.

- Owners must give instructions and review the information initially and annually with all personnel before allowing them to operate the conveyor. Untrained users/operators expose themselves and bystanders to possible serious injury or death.
- The conveyor is not intended to be used by children.
- Use the conveyor for its intended purposes only.
- Do not modify the conveyor in any way without written permission from the manufacturer. Unauthorized modification may impair the function and/or safety, and could affect the life of the conveyor. Any unauthorized modification will void the warranty.
- Follow a health and safety program for your worksite. Contact your local occupational health and safety organization for information.

1.3. Moving Conveyor Belt Safety

⚠ WARNING

- DO NOT step on or touch moving conveyor belt.
- Shut off and lock out power to adjust, service, or clean.

1.4. Rotating Parts Safety

⚠ WARNING

- Keep body, hair, and clothing away from rotating pulleys, belts, chains, and sprockets.
- Do not operate with any guard removed or modified. Keep guards in good working order.
- Shut off and remove key or lock out power source before inspecting or servicing machine.

1.5. Drives and Lockout Safety

Inspect the power source(s) before using and know how to shut down in an emergency. Whenever you service or adjust your equipment, make sure you shut down the power source and follow lockout and tagout procedures to prevent inadvertent start-up and hazardous energy release. Know the procedure(s) that applies to your equipment from the following power source(s). Ensure that only 1 key exists for each assigned lock, and that you are the only one that holds that key. Ensure that all personnel are clear before turning on power to equipment.

1.5.1 Gas Engine Safety

WARNING **Power Source**

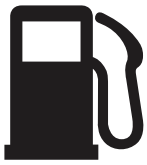

- Keep guards in place and secure.
- Properly ventilate surrounding area.
- Never fill the fuel tank with the engine running, while smoking, or near an open flame. Always shut down and allow engine to cool before filling with fuel.
- Never overfill the tank or spill fuel. If fuel is spilled, clean it up immediately.
- Be sure to use the correct type and grade of fuel. Ground the fuel funnel or nozzle against the filler neck to prevent sparks that could ignite fuel vapors.
- Be sure to replace the fuel fill cap when you are done.

Lockout

- For engines with an electric start, remove the ignition key, the spark plug wire, or the spark plug.
- For engines with a rope or crank start, remove the spark plug wire or the spark plug.

1.5.2 Electric Motor Safety

WARNING **Power Source**

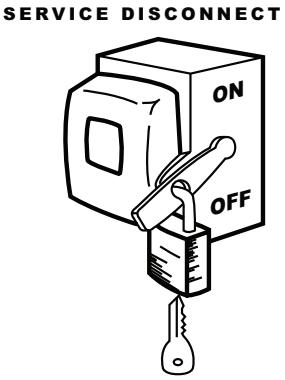

- Electric motors and controls shall be installed and serviced by a qualified electrician and must meet all local codes and standards.
- A magnetic starter should be used to protect your motor.
- You must have a manual reset button.
- Reset and motor starting controls must be located so that the operator has full view of the entire operation.
- Locate main power disconnect switch within reach from ground level to permit ready access in case of an emergency.
- Motor must be properly grounded.
- Guards must be in place and secure.
- Ensure electrical wiring and cords remain in good condition; replace if necessary.
- Use a totally enclosed electric motor if operating in extremely dusty conditions.

Lockout

- The main power disconnect switch should be in the locked position during shutdown or whenever maintenance is performed.
- If reset is required, disconnect all power **before** resetting motor.

1.5.3 Hydraulic Power Safety

WARNING **Power Source**

- Refer to the rules and regulations applicable to the power source operating your hydraulic drive.
- Do not connect or disconnect hydraulic lines while system is under pressure.
- Keep all hydraulic lines away from moving parts and pinch points.
- Escaping hydraulic fluid under pressure will cause serious injury if it penetrates the skin surface (serious infection or toxic reaction can develop). See a doctor immediately if injured.
- Use metal or wood as a backstop when searching for hydraulic leaks and wear proper hand and eye protection.
- Check all hydraulic components are tight and in good condition. Replace any worn, cut, abraded, flattened, or crimped hoses.
- Clean the connections before connecting to equipment.
- Do not attempt any makeshift repairs to the hydraulic fittings or hoses with tape, clamps, or adhesive. The hydraulic system operates under extremely high pressure; such repairs will fail suddenly and create a hazardous and unsafe condition.

Lockout

- Always place all hydraulic controls in neutral and relieve system pressure before disconnecting or working on hydraulic system.

1.6. Tire Safety

⚠ WARNING Failure to follow proper procedures when mounting a tire on a wheel or rim can produce an explosion that may result in serious injury or death.

- DO NOT attempt to mount a tire unless you have the proper equipment and experience to do the job.
- Have a qualified tire dealer or repair service perform required tire maintenance.
- When replacing worn tires, make sure they meet the original tire specifications. Never undersize the replacement tire.
- DO NOT weld to the tire rim with the tire mounted on the rim. This action may cause an explosion which could result in serious injury or death.
- Inflate tires to the manufacturer's recommended pressure.
- Tires should not be operated at speeds higher than their rated speed.
- Keep wheel lug nuts tightened to manufacturer's recommendations.
- Never reinflate a tire that has been run flat or seriously under-inflated without removing the tire from the wheel. Have the tire and wheel closely inspected for damage before remounting.

1.7. Battery Safety

⚠ WARNING

- Wear safety glasses and protective gloves when working near batteries.
- Make certain the battery or terminal covers are in place and in good working order.
- Keep all sparks and flames away from batteries; gas given off by electrolyte is explosive.
- Avoid contact with battery electrolyte. Wash off any spilled electrolyte immediately.
- Do not tip batteries more than 45° to avoid electrolyte loss.
- To avoid injury from sparks or short circuits, disconnect battery ground cable before servicing any part of an electrical system.

1.8. Hand Winch Safety

WARNING **When Equipped:**

- Inspect lift cable before using. Replace if frayed or damaged. Make sure lift cable is seated properly in cable sheaves and cable clamps are secure.
- Tighten brake lock by turning winch handle clockwise at least two clicks after lowering the conveyor.
- Lower the conveyor fully before towing, then rotate winch handle until cable has light tension.
- Do not lubricate winch brake discs.

1.9. Hydraulic Winch Safety

WARNING **When Equipped:**

- Keep away from rotating cable drum and winch cable. Do not touch or grab cable while winch is being operated or use hands to guide the cable. Failure to heed could result in serious injury.
- Inspect cable and cable clamps before installing and using hydraulic winch. Replace cable if frayed or damaged. Tighten cable clamps if necessary.
- Do not continue to supply power to hydraulic winch after the conveyor has reached full up position.
- Do not disconnect hydraulic quick couplers when lines are pressurized.
- Make sure lift cable is seated in cable pulley.
- Always keep a minimum of 3 cable wraps on the cable drum.

1.10. Personal Protective Equipment

The following Personal Protective Equipment (PPE) should be worn when assembling the equipment.

Safety Glasses

- Wear safety glasses at all times to protect eyes from debris.

Work Gloves

- Wear work gloves to protect your hands from sharp and rough edges.

Steel-Toe Boots

- Wear steel-toe boots to protect feet from falling debris.

Coveralls

- Wear coveralls to protect skin.

Hard Hat

- Wear a hard hat to help protect your head.

1.11. Safety Equipment

The following safety equipment should be kept on site:

Fire Extinguisher

- Provide a fire extinguisher for use in case of an accident. Store in a highly visible and accessible place.

First-Aid Kit

- Have a properly-stocked first-aid kit available for use should the need arise, and know how to use it.

1.12. Safety Decals

- Keep safety decals clean and legible at all times.

- Replace safety decals that are missing or have become illegible. See decal location figures that follow.
- Replaced parts must display the same decal(s) as the original part.
- Replacement safety decals are available **free of charge** from your distributor, dealer, or factory as applicable.

1.12.1 Decal Installation/Replacement

1. Decal area must be clean and dry, with a temperature above 50°F (10°C).
2. Decide on the exact position before you remove the backing paper.
3. Align the decal over the specified area and carefully press the small portion with the exposed sticky backing in place.
4. Slowly peel back the remaining paper and carefully smooth the remaining portion of the decal in place.
5. Small air pockets can be pierced with a pin and smoothed out using the sign backing paper.

1.12.2 Safety Decal Locations and Details

Replicas of the safety decals that are attached to the conveyor and their messages are shown in the figure(s) that follow. Safe operation and use of the conveyor requires that you familiarize yourself with the various safety decals and the areas or particular functions that the decals apply to, as well as the safety precautions that must be taken to avoid serious injury, death, or damage.

Figure 1. Safety Decal Locations

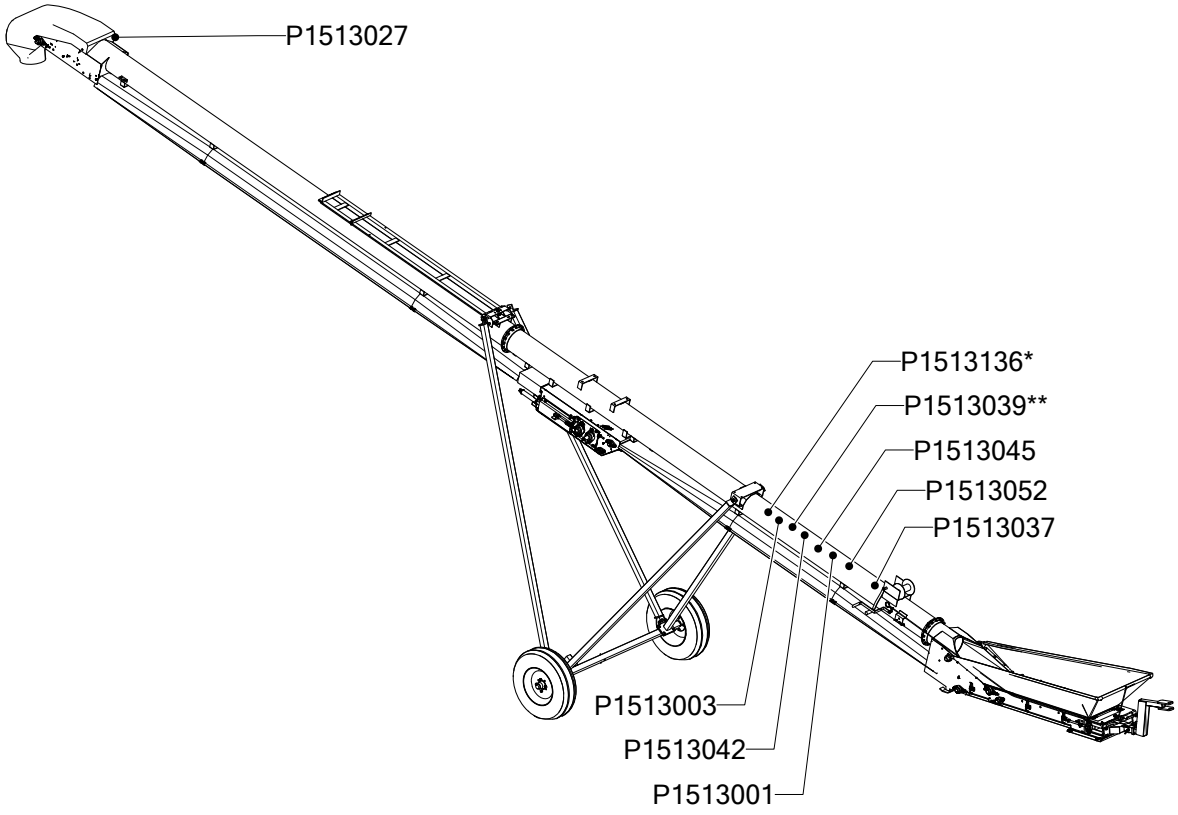

* if equipped with EPA gas tank
** if equipped with hand winch

Figure 2. S-Drive Safety Decal Location

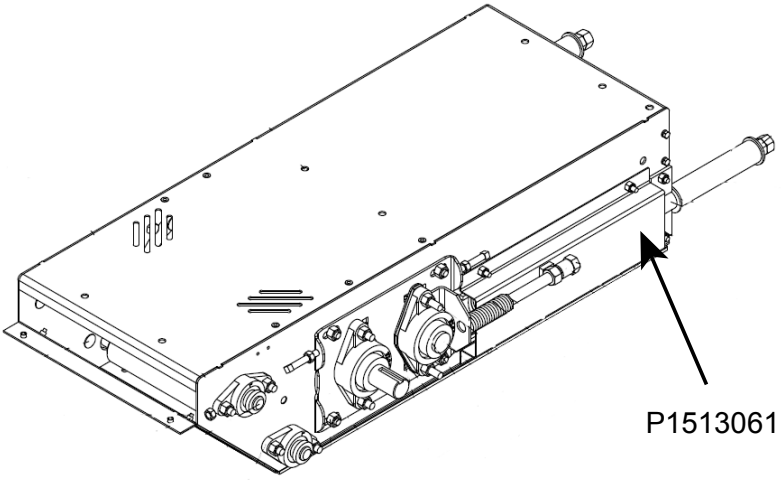

Figure 3. Gas Drive Safety Decal Locations (Over-Mount)

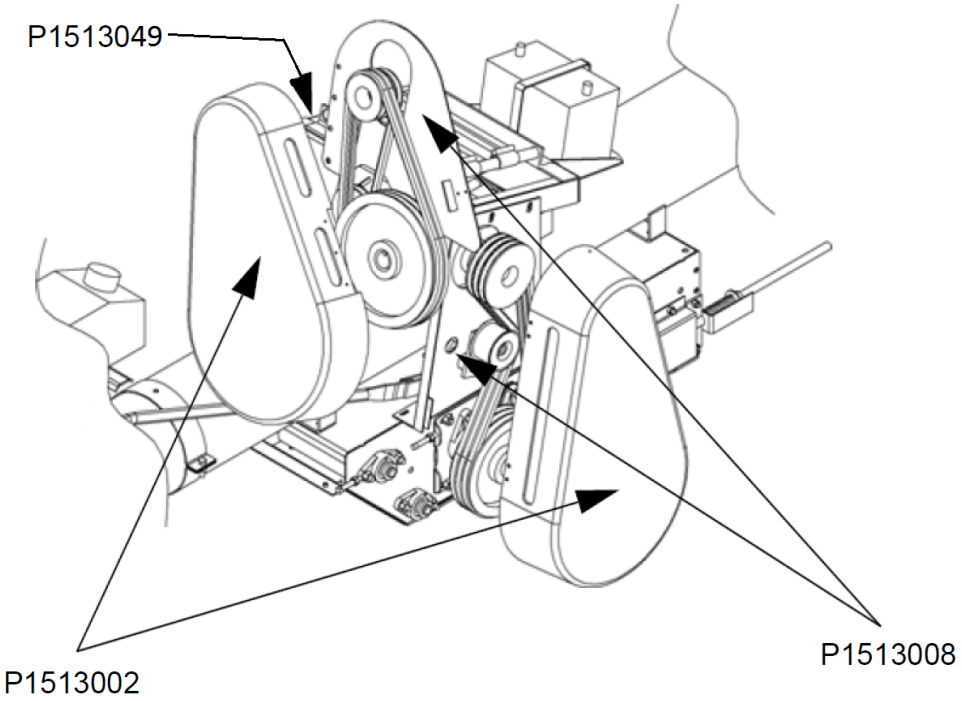

Figure 4. Electric Drive Safety Decal Locations (Over-Mount)

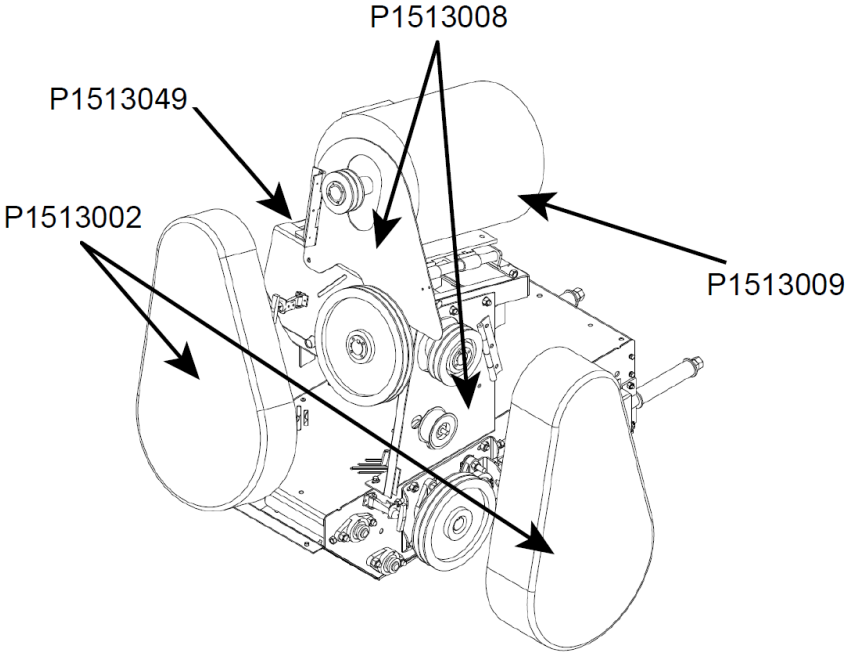

Figure 5. Gas Drive Safety Decal Locations (Under-Mount)

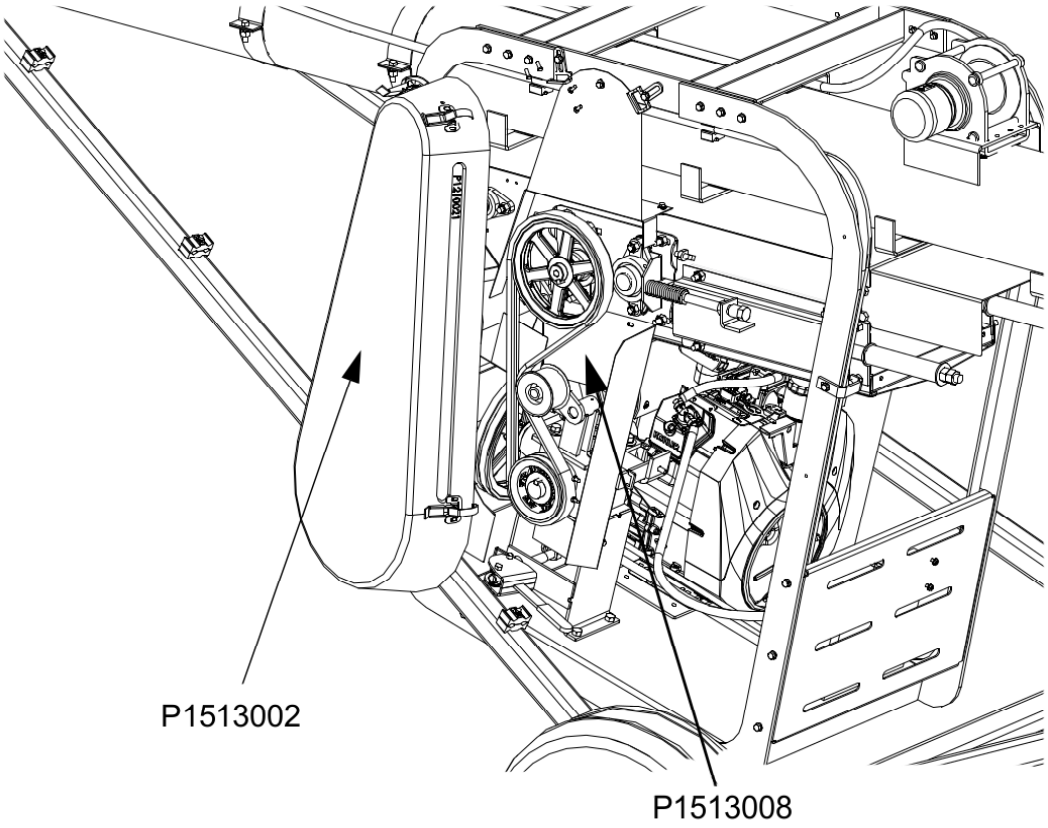

Figure 6. Hydraulic Winch Decal Locations (If Equipped)

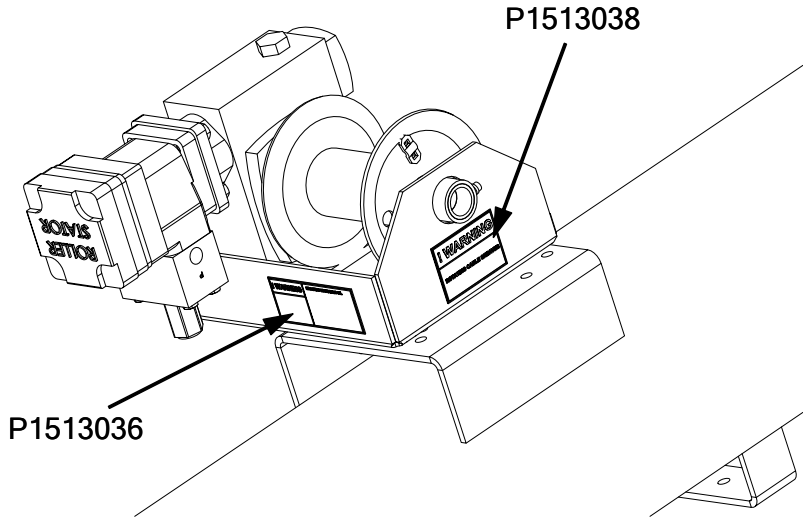

Table 1. Safety Decals

Part Number	Description
P1513003	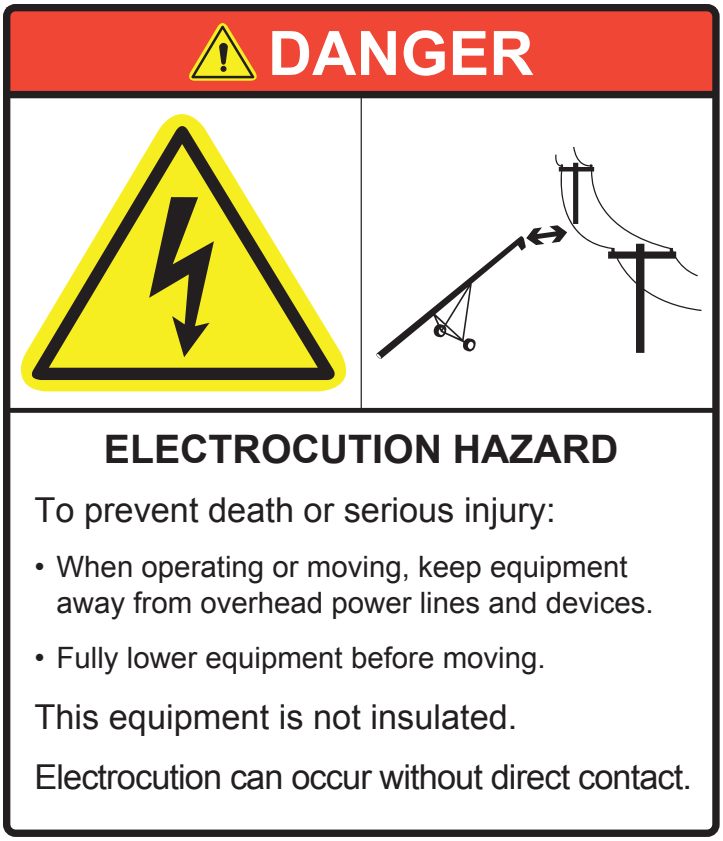
P1513038	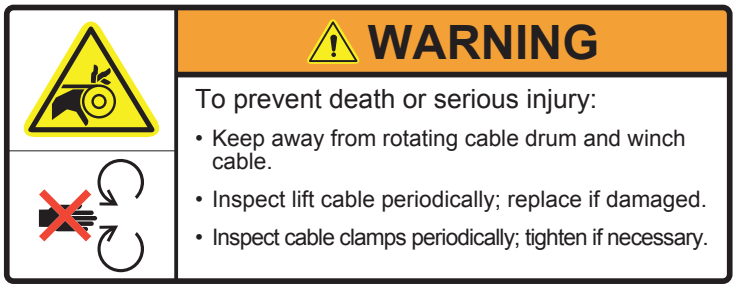
P1513036	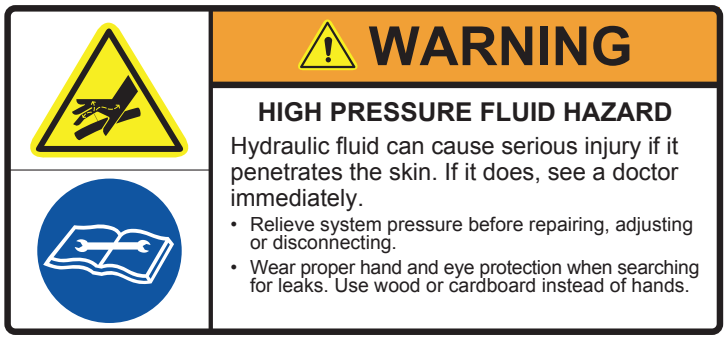

Table 1 Safety Decals (continued)

Part Number	Description
P1513045	
P1513037	

Table 1 Safety Decals (continued)

Part Number	Description
P1513001	**WARNING** To prevent serious injury or death: • Read and understand the manual before assembling, operating, or maintaining the equipment. • Only trained personnel may assemble, operate, or maintain the equipment. • Children and untrained personnel must be kept outside of the work area. • Do not modify the equipment. Keep in good working order. • If the manual, guards, or decals are missing or damaged, contact factory or representative for free replacements. • Lock out power before performing maintenance. • To prevent equipment collapse or upending, support equipment tube while disassembling certain components. • Electric motors must be grounded. Disconnect power before resetting overloads.

Table 1 Safety Decals (continued)

Part Number	Description
P1513042	

Table 1 Safety Decals (continued)

Part Number	Description
P1513002	
P1513008	

Table 1 Safety Decals (continued)

Part Number	Description
P1513009	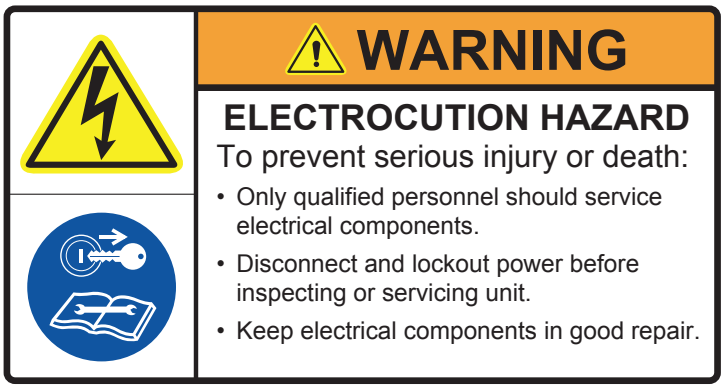
P1513136	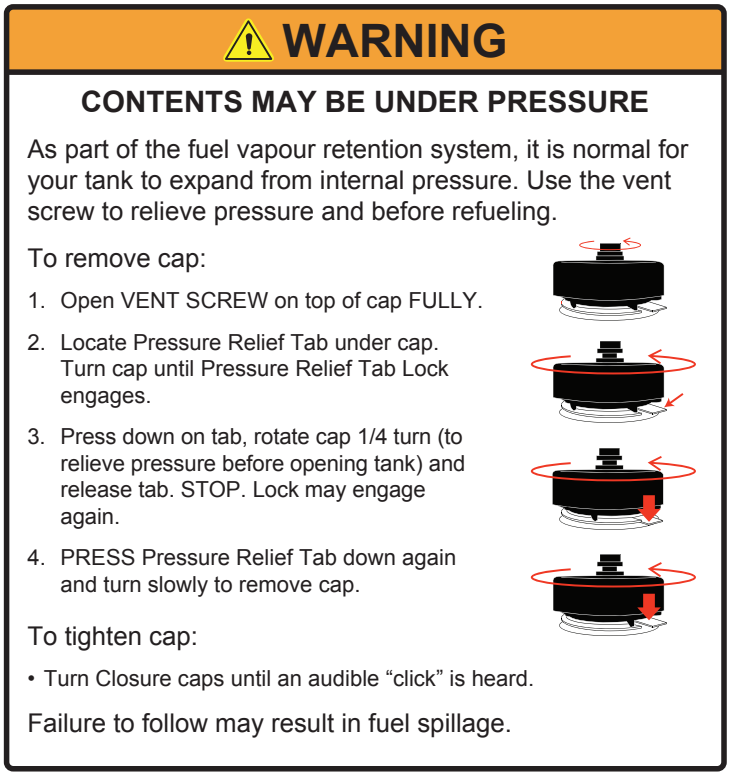

Table 1 Safety Decals (continued)

Part Number	Description
P1513039	**⚠ CAUTION** For proper raising and lowering of equipment: • After lowering equipment, always tighten brake lock by turning winch handle clockwise at least two clicks. • Rotate winch handle until cable has light tension, when in towing position. • Do not lubricate winch brake discs. • Inspect lift cable periodically; replace if damaged. • Inspect cable clamps periodically; tighten if necessary.
P1513052	***NOTICE*** To prevent damage, wheels must be free to move when raising or lowering equipment. When equipment is positioned, chock all wheels.

Table 1 Safety Decals (continued)

Part Number	Description
P1513027	**NOTICE** 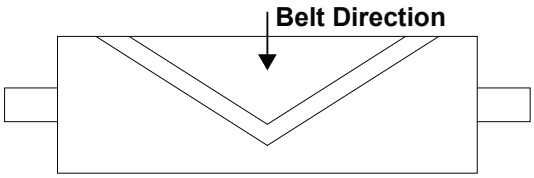 To prevent damage to the belt and roller: • Install roller with roller lagging pointing in the direction of belt travel. • Annually inspect condition of roller, lagging and belt. • Ensure that you do not run a machine with loose lagging, or the conveyor belt may become damaged.

Table 1 Safety Decals (continued)

Part Number	Description
P1513061	**NOTICE** 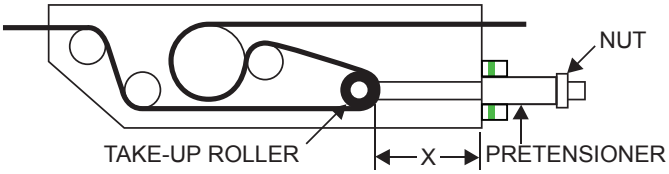 To prevent belt damage, use correct belt tension and do not attempt to adjust belt tracking with the take-up roller. To set correct belt tension: • While conveyor is running empty, tighten nut against the pretensioner (take-up pipe) so that the edge of the indicator pipe is within the green area. • Ensure take-up roller is tensioned equally by using a tape to measure distance “X”. • After the conveyor belt has been tensioned, check the alignment of all other s-drive rollers and periodically afterward. See manual for complete instructions.
P1513049	**IMPORTANT** Lubricate belt release and motor mount sliders with silicone or light oil.

2. Features

This section covers the main features of the conveyor.

Figure 7. Typical Field Loader S-Drive Components

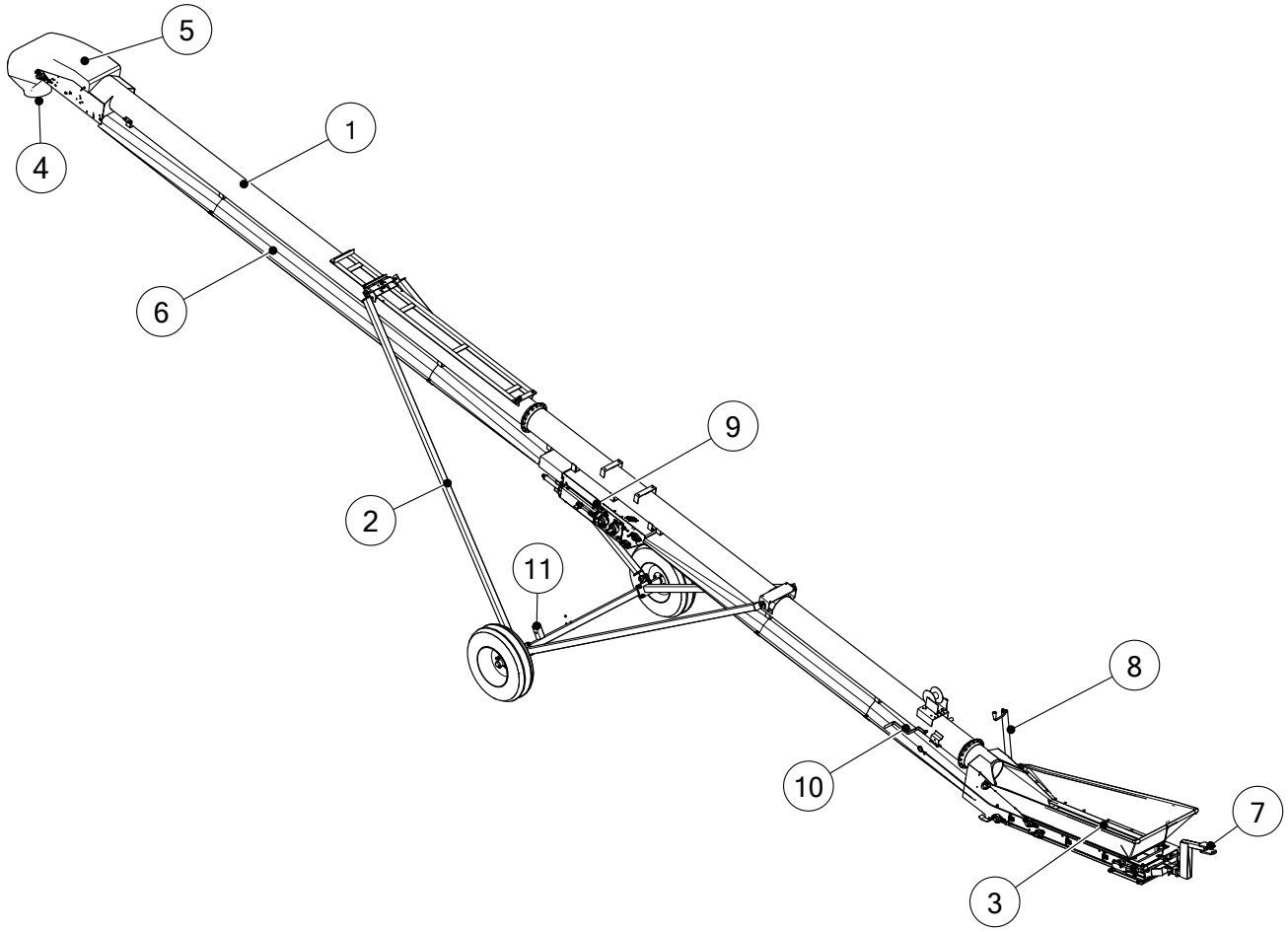

Table 2. Typical Field Loader S-Drive Components

ITEM	DESCRIPTION	ITEM	DESCRIPTION
1	Tube	7	Hitch
2	A-Frame	8	Jack
3	Hopper	9	S-Drive
4	Spout Assembly	10	Collapsible Hopper Control
5	Hood	11	Hitch Tongue Holder
6	Belt Return and Weather Guard		

3. Assembly

Before continuing, ensure you have completely read and understood this manual's Safety section, in addition to the safety information in the section(s) below.

3.1. Assembly Safety

WARNING

- Do not take chances with safety. The components can be large, heavy, and hard to handle. Always use the proper tools, rated lifting equipment, and lifting points for the job.
- Carry out assembly in a large open area with a level surface.
- Always have two or more people assembling the conveyor.
- Make sure you have sufficient lighting for the work area.
- Tighten all fasteners according to their specifications. Do not replace or substitute bolts, nuts, or other hardware that is of lesser quality than the hardware supplied by the manufacturer.
- Stay away from overhead power lines and other obstructions during assembly. Contact with power lines can cause electrocution.
- Do not work in high winds.

3.2. Check Shipment

Unload the conveyor parts at the assembly site and compare the packing slip to the shipment. Ensure that all items have arrived and that none are damaged.

Report missing or damaged parts immediately to ensure that proper credit is received from AGI or your distributor/dealer, and to ensure that any missing parts can be shipped quickly to avoid holding up the assembly process.

Important

Do not assemble or install damaged components.

3.3. Required Tools

- 2–3 pipe stand(s)
- 2 sawhorse(s) (1200 lb [544.3 kg])
- 1 standard socket set(s)
- 2 wrench set(s)
- 1 torque wrench(es)
- 1 set(s) of Allen wrenches
- 1 hammer and punch
- 1 drill with bits 3/16”, 5/16”
- 2 tape measure(s) (25’ [7.6 m])
- 1 tape measure(s) (100’ [30.5 m])
- 1 ratchet strap
- 2 C-clamp(s) or vise grip(s)
- 1 fish tape (100’ [30.5 m])
- 1 tire pressure gauge
- 1 tire chuck
- 1 propane torch
- 1 picker with minimum reach of 12’ (3.7 m) and 4000 lb to 6000 lb (1814 kg to 2722 kg) lifting capacity

3.4. Before You Begin

Before you assemble the conveyor:

- Familiarize yourself with all the sub-assemblies, components, and hardware that make up the equipment.
- Have all parts and components on hand, and arrange them for easy access.
- Separate the hardware (bolts, nuts, etc.) and lay them out into groups for easier identification during assembly.
- Ensure there is adequate space to remove the assembled conveyor from the assembly area.

3.5. Hydraulic Fittings and Bolt Tightening

Remember the following basic considerations when tightening hydraulic fittings and bolts:

- Tighten all fasteners to the torque specified in Section 5.1 – Bolt Torque on page 133. Do not replace or substitute bolts, nuts, or other hardware that is of lesser quality than the hardware supplied by the manufacturer.
- All hydraulic fittings should be torqued to the recommended specifications. See Section 5.2 – Fittings Torque Values on page 134.

NOTICE Do not over-tighten fittings. Over-tightening hose fittings can crack the fittings or motor body and will void the warranty.

3.6. Component Locations

Layout Drawing

Be sure to select the proper layout drawing. The dimensions change for each machine depending on the drive option selected. Incorrect placement of the components affects machine balance and can cause a heavy or light intake. The layout drawing is attached to the packing list.

Mark the Tube

Always ensure that the hopper remains level during the attachment of all components that bolt to the conveyor tubing. Use a tape measure to mark out component locations that bolt to the tube. Mark locations on the top side of the tube. Refer to the tube drawing attached to the packing list for layout measurements and component locations.

Tightening Brackets

For all bolt-on brackets and u-clamps, tighten nuts part-way on one side of bracket, then tighten part-way on opposite side. Do this until bracket is fully tightened and ensure it remains level during this procedure.

Note

During the installation of all u-clamps on the grain conveyor tubes, tighten until the tube begins to deform or crimp. This locks the u-clamps into place. The term “crimp” will be used to describe this technique throughout this manual.

Figure 8. U-Clamp

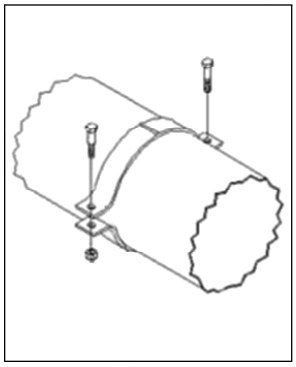

3.7. Assemble the Remainder of the S-Drive

Note

The s-drive normally comes mostly pre-assembled when delivered from the factory. The steps below are the remaining assembly which must be performed.

For each side of the s-drive:

1. Remove the shipping wire holding the square nut (2) onto the take-up roller bolt assembly (1), and thread off the square nut from the take-up roller bolt (see Figure 9).

   Note

   The take-up roller bolt assembly (1) is comprised of the take-up roller bolt, a flat washer, spring, bushing, pre-tensioner (take-up pipe), and hex nuts. This is factory pre-assembled.

2. Remove the take-up bracket (3), which was factory pre-assembled onto the s-drive.
3. Slide the take-up roller bearing units (4) to the spout-end of the s-drive.
4. Insert the square nut (2) into the take-up roller bearing unit (4).
5. Slide the take-up bracket (3) onto the take-up roller bolt assembly (1).

6. Thread the take-up roller bolt assembly (1) into the square nut (2).
7. Hammer the spring pin (5) through the square nut (2) and take-up roller bolt (1).
8. Re-fasten the take-up bracket (3) with the heads of the 3/8" x 1" hex bolts (6) on the inside of the s-drive and the 3/8" locknuts (7) on the outside of the s-drive, to keep the bolt shafts away from the belt.

Note

The s-drive bottom guard will be assembled onto the conveyor later, after belt tensioning and alignment.

Table 3. S-Drive Components to Assemble

Item	Description	Quantity
1	Take-up Roller Bolt Assembly	2
2	Square Nut	2
3	Take-up Bracket	2
4	Take-up Roller Bearing Unit	2
5	Spring Pin 1/4" x 1–1/2"	2
6	Hex Bolt 3/8" x 1"	4
7	Nylon Locknut 3/8"	4

Figure 9. S-Drive Components

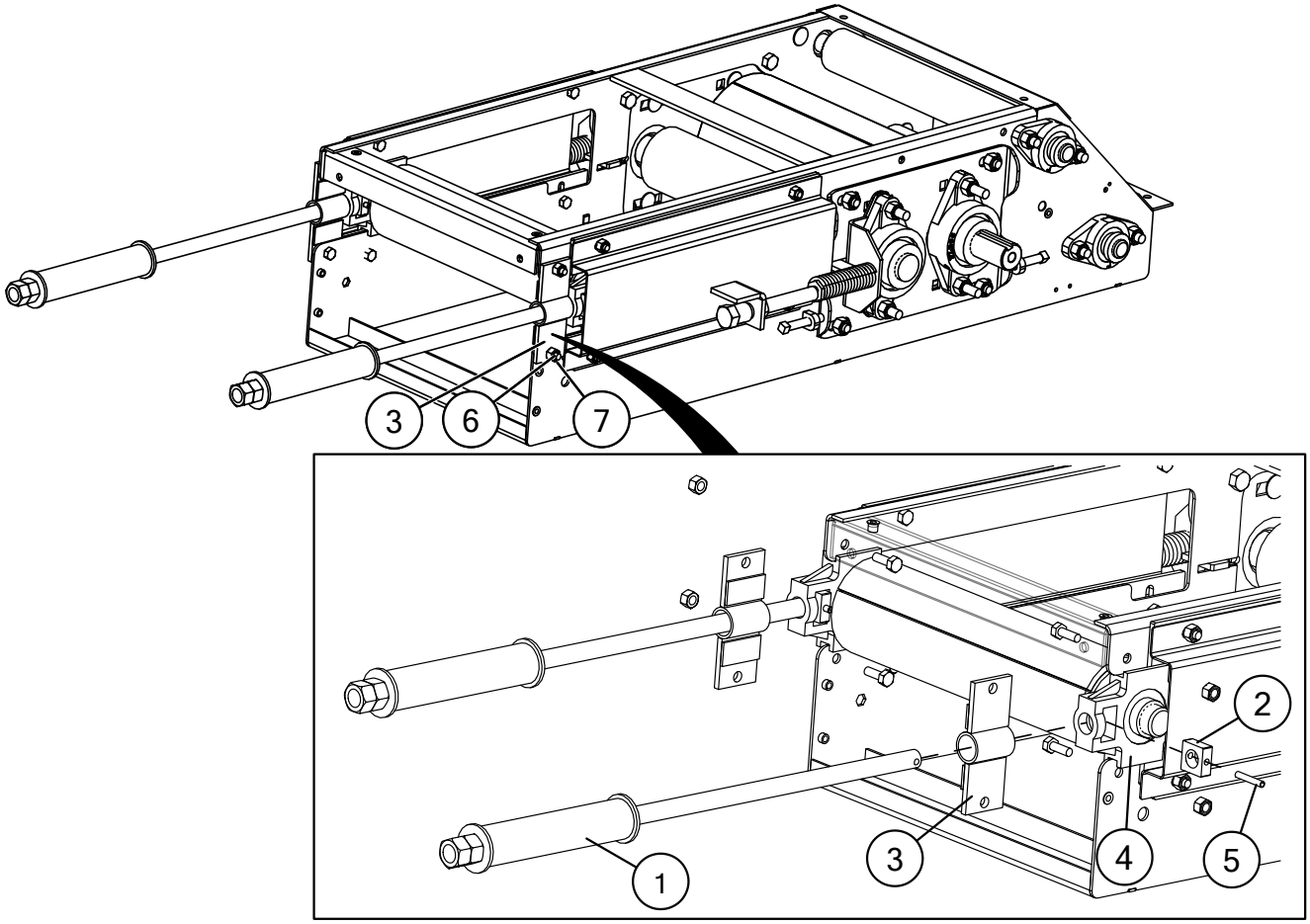

3.8. Assemble the Conveyor Tube

1. Review the tube layout figure below for your specific conveyor model to determine the order in which the tubes must be connected together. Part numbers are shown for tube identification.
2. Place the tubes on two support stands to support each tube section. The support stands must be set at equal height (see Figure 10). Anchor the tubes to the stands if necessary to prevent rolling.

   ⚠ CAUTION Failure to secure the tubes may result in personal injury.

3. Confirm that all tubes are set level and oriented correctly.
4. Fasten tube flanges together with 7/16" x 1" bolts (2) and 7/16" locknuts (1) as each tube section is placed, starting at the hopper end and working toward the spout end. Ensure the tubes are aligned and the bolts are straight.

   Note

   A punch can be used to assist alignment. If you are not careful, it is possible to bolt the flanges together non-concentrically with the bolts crooked through the holes.

Table 4. Tube Connection Components

Item	Description
1	7/16" Locknut
2	7/16" x 1" Bolt GR8

Figure 10. Typical Tube Connection

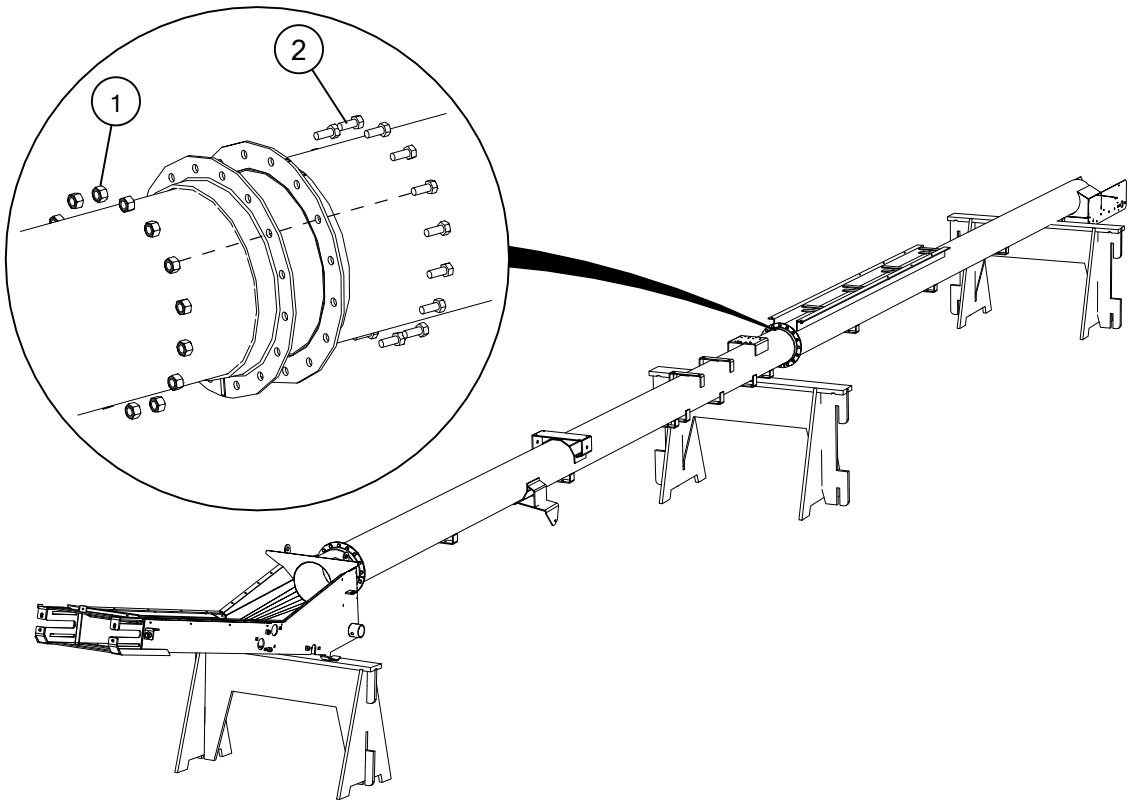

Figure 11. Conveyor Tube Layout for CX² 1539 Model (Batco and Westfield)

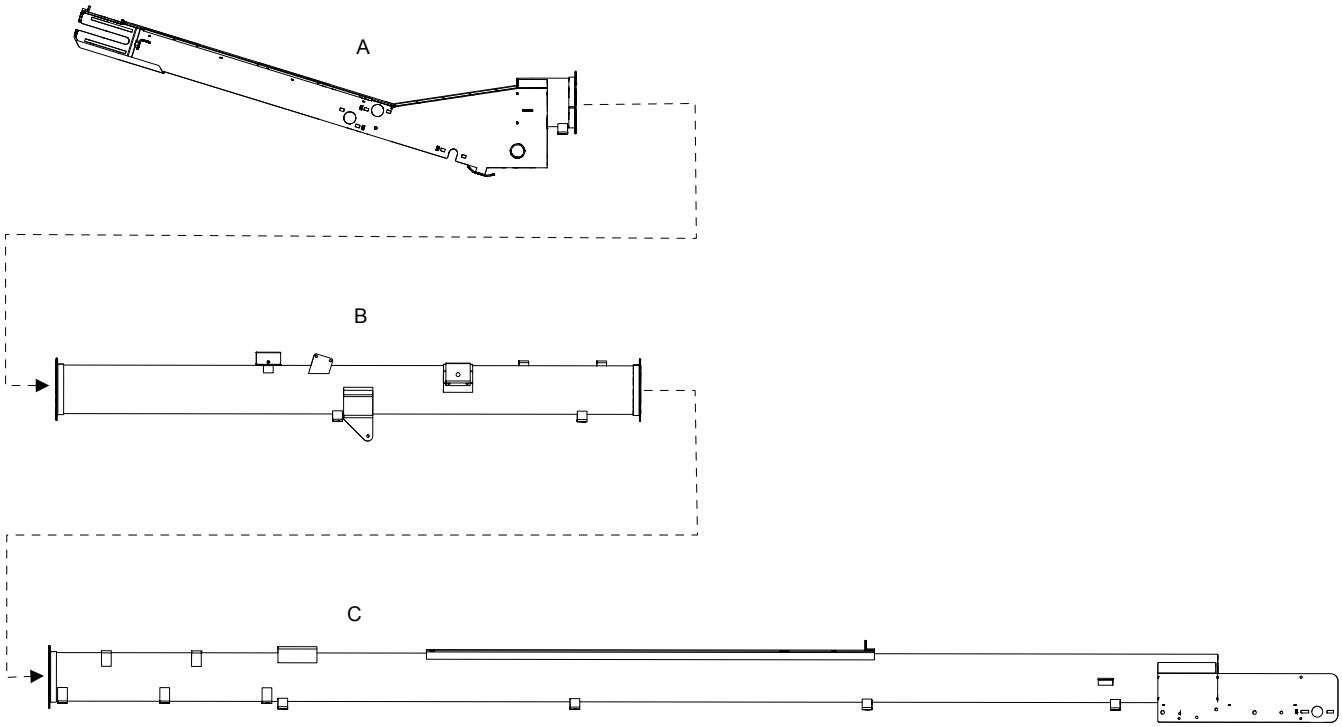

A	15555547, 15555548 (Short)
B	15020038 (FMD units), 15020026 (Non-FMD units)
C	15020036 (FMD units), 15020028 (Non-FMD units)

Figure 12. Conveyor Tube Layout for CX² 1549 Model (Batco and Westfield)

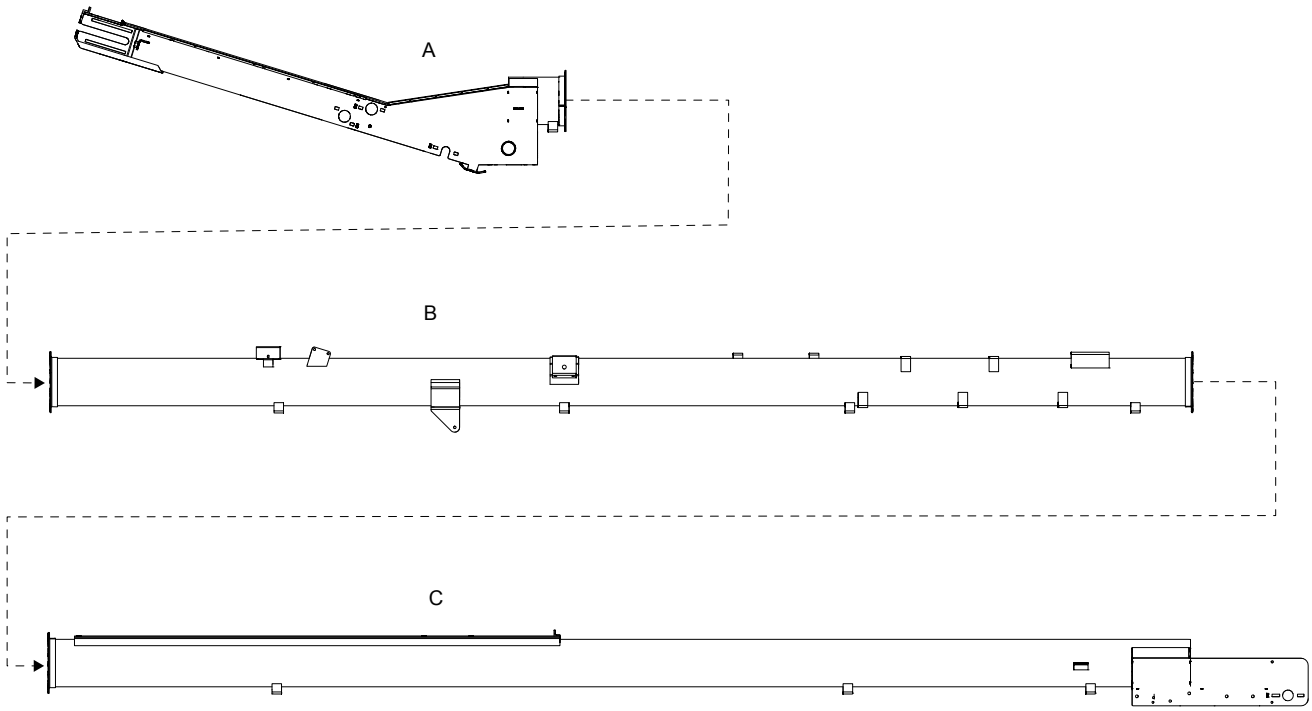

A	15555547
B	15020033 (FMD units), 15020029 (Non-FMD units)
C	15020030

Figure 13. Conveyor Tube Layout for HCX² 1549 Model (Hutchinson)

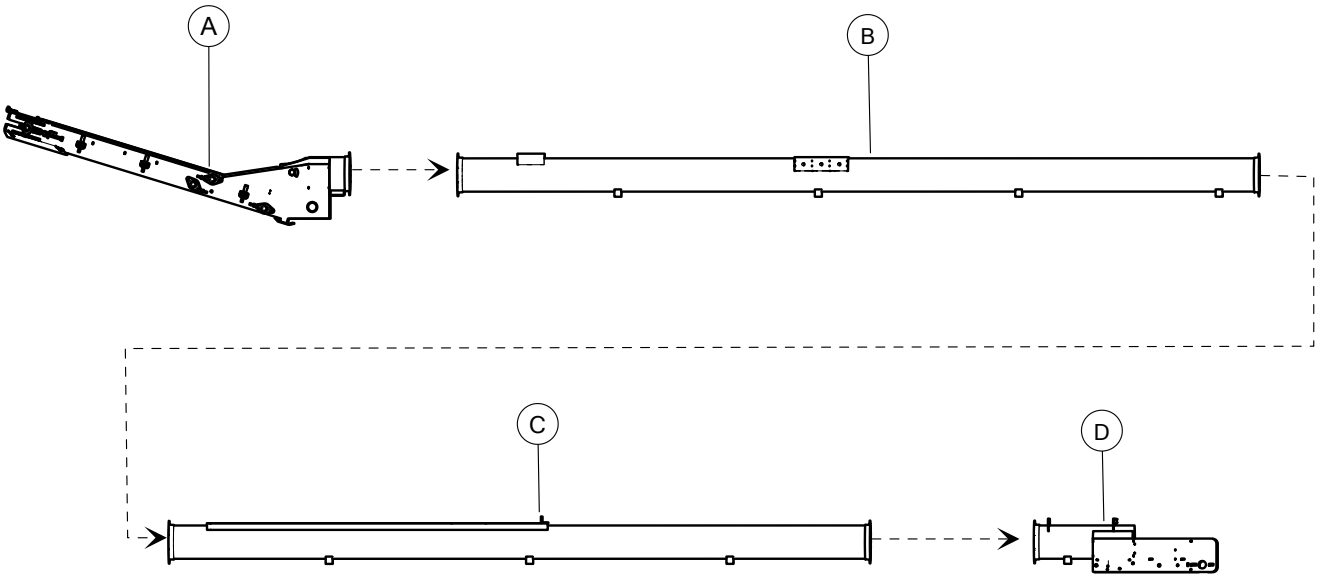

A	15555547
B	15020118
C	15020150
D	15020147

3.9. Brand and Model Decal Placement

Important

Do not cover any existing safety or instruction decals with the brand and model decals. Also make sure the decals do not interfere with any welded-on brackets or tube flanges.

- The decals should be placed as follows (see Figure 14):
  - Brand (B): as near as possible to the conveyor spout
  - Model (M): as near as possible to the bottom end of the track

  Examples of the appearance of brand and model decals are in Figure 15 and Figure 16.

Figure 14. Brand (B) and Model (M) Decal Placement

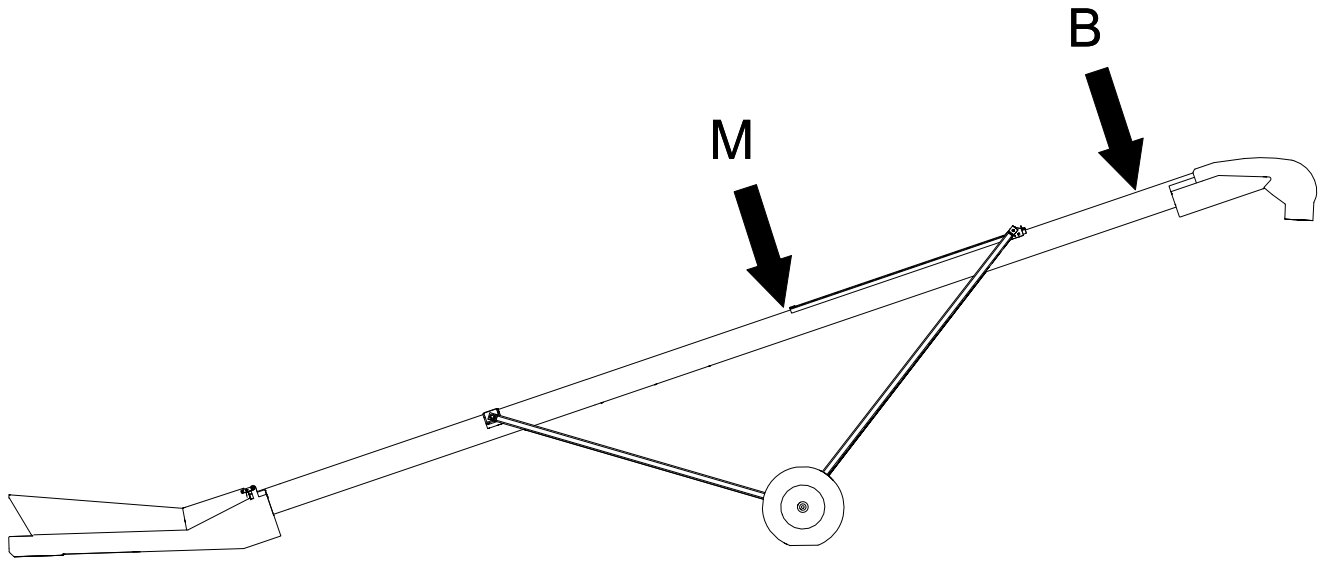

Figure 15. Brand Decal (example)

AGI BATCO

Figure 16. Model Decal (example)

BCX2 1549

- Apply decals to both sides of conveyor tube.
- For each decal:
  1. Prepare surface by cleaning thoroughly with soap and water. Surface must be clean and free of dirt, grime, rust and oil. To clean oily surface, wipe with clean cloth and solvent cleaner or isopropyl alcohol.
  2. Position the decal by centering it vertically on the tube and apply masking tape along the top, creating a gate hinge (see Detail A in Figure 17).
  3. Remove backing paper from decal 6” from the top and use the squeegee to adhere decal to the tube (see Detail B). Start at the top center of the decal and work your way outward both left and right using overlapping strokes.

4. As you work your way down the decal, peel back the backing paper 6” at a time. Repeat Step 3 until the entire decal has been applied to the tube (see Detail C as an example).
5. Once the entire decal has been properly adhered to the tube, remove tape hinge from front of decal. Remove the front application tape at a sharp 180° angle.
6. Inspect the entire decal for air pockets; if found, remove them by punching a tiny hole with a pin and then squeegee the surface flat.
7. Squeegee the corners and edges of the decal to ensure proper adhesion and to prevent premature peeling.

Figure 17. Decal Placement Technique

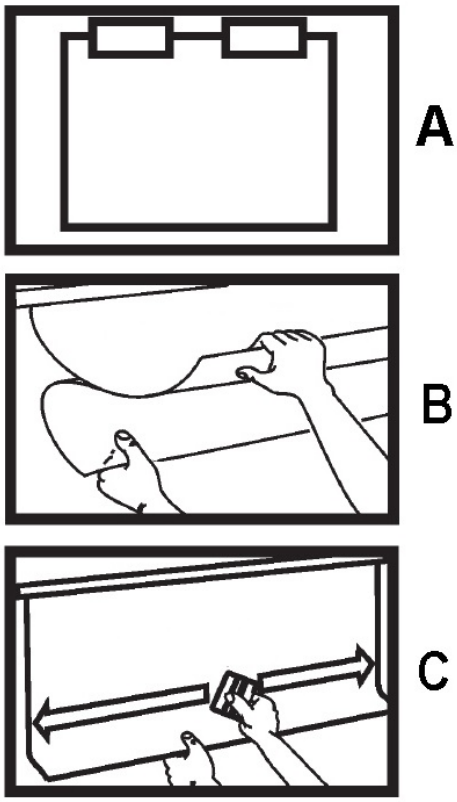

3.10. Serial Number Decal Placement

Place the serial number decal on the conveyor as shown below.

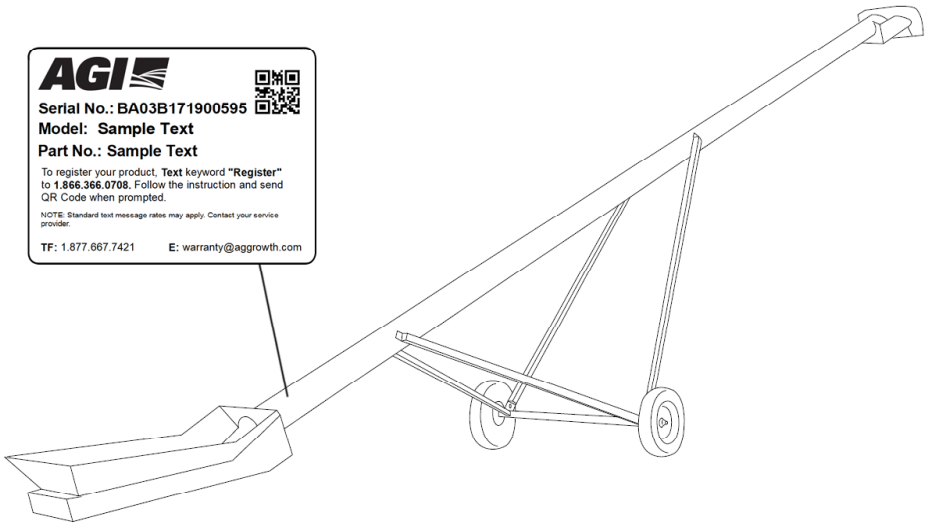

3.11. Install the Spout Roller

1. Insert the roller (2) into the spout (1) (see Figure 19), with the roller lagging pointing in the direction of belt travel (see Figure 18).

Figure 18. Roller with Lagging Pointing in Belt Travel Direction

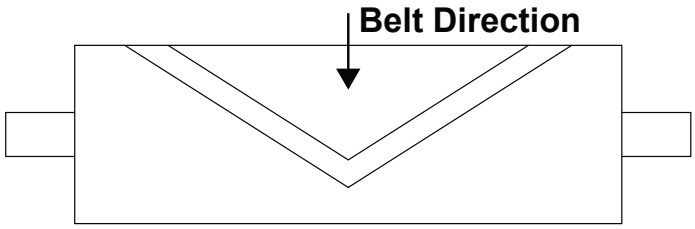

2. Slide a bearing (5) on each end of the roller and secure to the spout using 1/2" x 1–1/2" carriage bolts (3), square flat washers (4), and 1/2" locknuts (6).

   Important

   If the square shoulder of the carriage bolt still sticks through the spout side plates, you must either add a 2nd square washer or tighten up the nut slowly as to not crack the bearing body.

3. Center the roller (2) in the spout.
4. Make sure the roller (2) is positioned straight by measuring the distance (d) from the end of the roller to the end of the spout weldment sidewall on both sides (it should be the same distance).
5. For each bearing, use a hammer and punch to rotate the lock collar so that it seats onto the inner race of the bearing. Tighten the lock collar securely to the shaft with its hex set screw.
6. Insert the 7/16" x 2-1/2" square-head set screws (7) in the spout.

   Note

   The square-head set screws are used to set the alignment of the belt, after the belt is installed.

Table 5. Spout Roller Components

Item	Description	Quantity
1	Spout	1
2	Lagged Spout Roller	1
3	1/2" x 1–1/2" Carriage Bolt	4
4	Square Flat Washer (0.531"-1.00"-0.060")	4
5	1-1/2" Bearing Flange Unit (SAFL208–24)	2
6	1/2" Nylon Locknut	4
7	7/16" x 2-1/2" Square-Head Set Screw	2

Figure 19. Installing Spout Roller

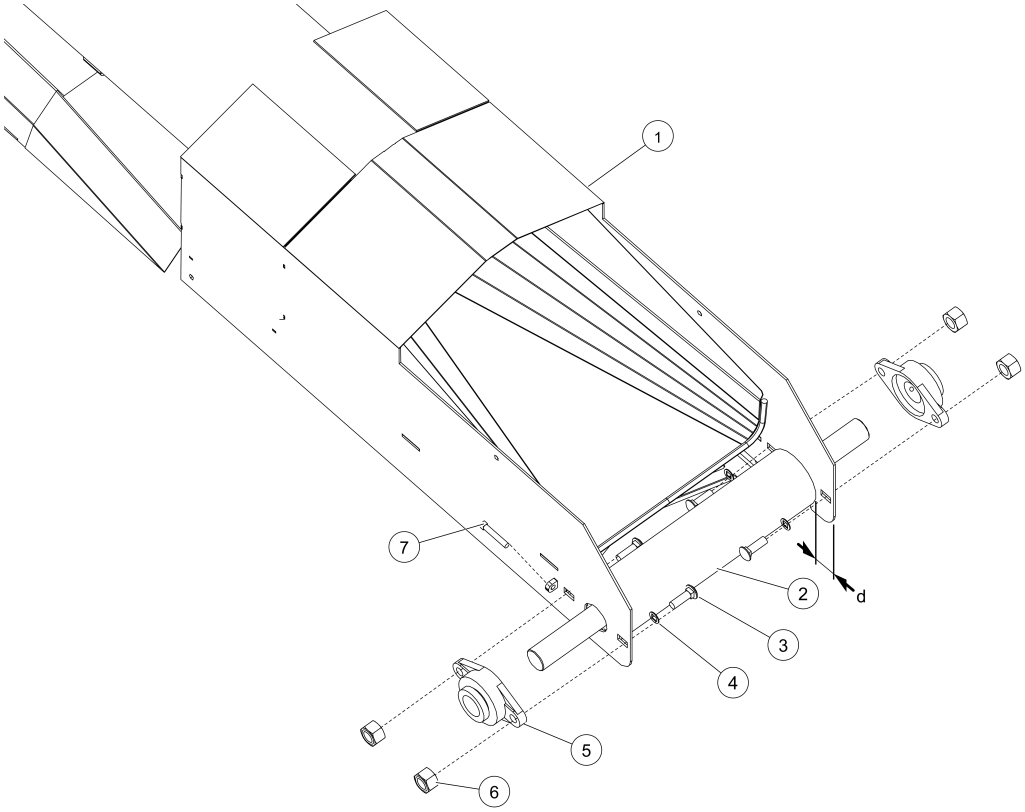

3.12. Install the Frame Slider

1. Slide the slider (2) onto the track (see Figure 20).
2. Install the cable attach (6) on the track with 7/16" x 1-1/2" bolts (3), 7/16" locknuts (4), and flat washers (5).
3. Install the trackstop (1) on the track with 7/16" x 1-1/2" bolts (3), 7/16" locknuts (4), and flat washers (5).

Note

You may need to drill holes to install the trackstop. Refer to your layout drawing to determine the location of the trackstop.

Note

Some conveyors do not require a trackstop. Refer to your layout drawing to determine if your conveyor requires a trackstop.

Table 6. Frame Slider Components

Item	Description
1	Trackstop
2	Slider
3	7/16" x 1-1/2" Hex Bolt (GR8)
4	7/16" Nylock Nut
5	7/16" Flat Washer
6	Cable Attach

Figure 20. Installing the Frame Slider

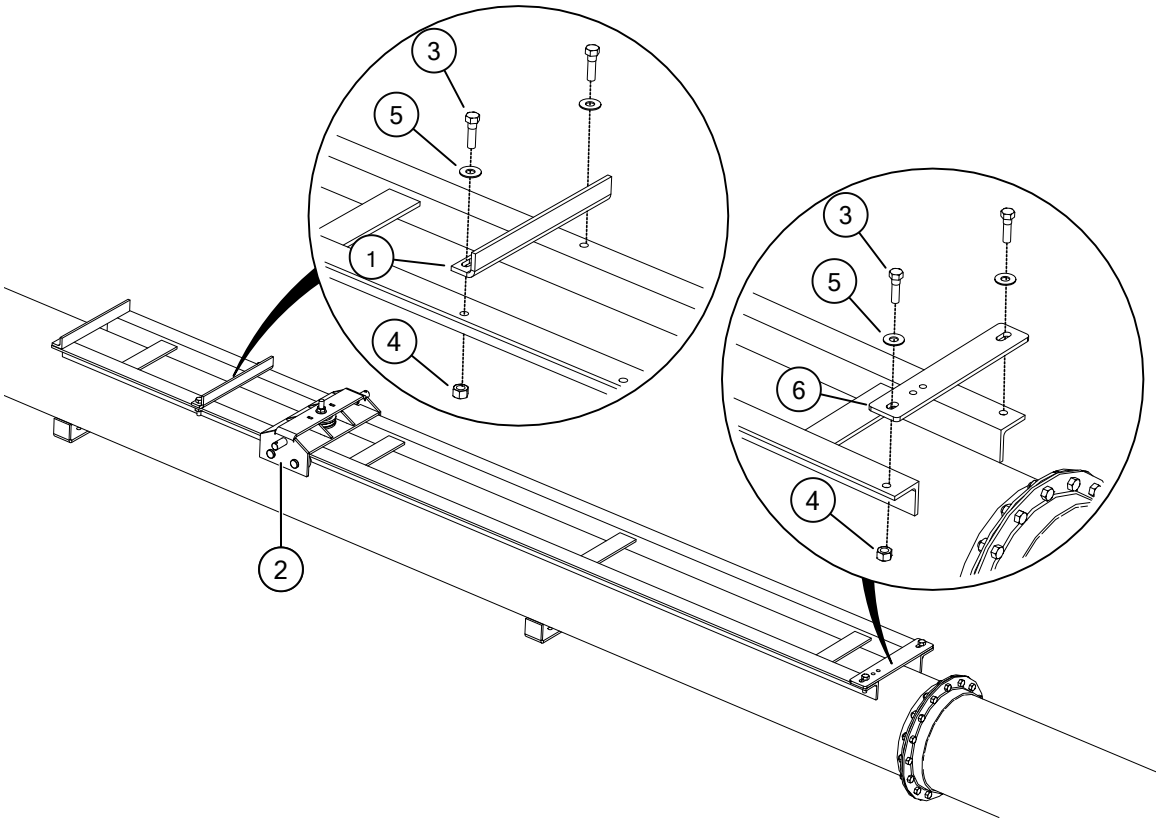

3.13. Install the Hand Winch

Depending on your conveyor model, it may be equipped with either a hand winch or a hydraulic winch.

1. Attach the winch (7) to the winch mount bracket (2) with 3/8" x 1" bolts (5), 3/8" flat washers (6), and 3/8" locknuts (8) (see Figure 21).

Table 7. Hand Winch Components

Item	Description
2	Winch Mount Bracket
5	3/8" x 1" Hex Bolt (GR 8)
6	3/8" Flat Washer
7	Hand Winch
8	3/8" Nylock Nut

Figure 21. Installing the Hand Winch

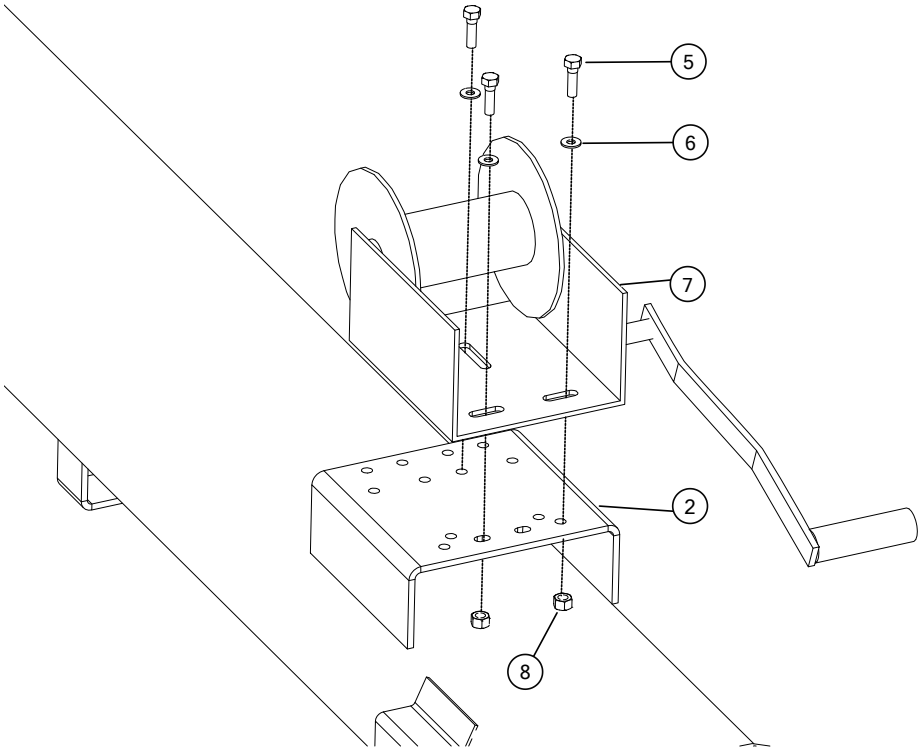

3.14. Install the Hydraulic Winch

Depending on your conveyor model, it may be equipped with either a hand winch or a hydraulic winch.

1. Attach the winch (3) to the winch mount bracket (4) with 3/8" x 1" bolts (1), 3/8" flat washers (2), and 3/8" locknuts (5) (see Figure 22).

Table 8. Hydraulic Winch Components

Item	Description
1	3/8" x 1" Hex Bolt (GR8)
2	3/8" Flat Washer
3	Winch
4	Winch Mount Bracket
5	3/8" Nylon Locknut

Figure 22. Attaching the Winch to the Tube Bracket

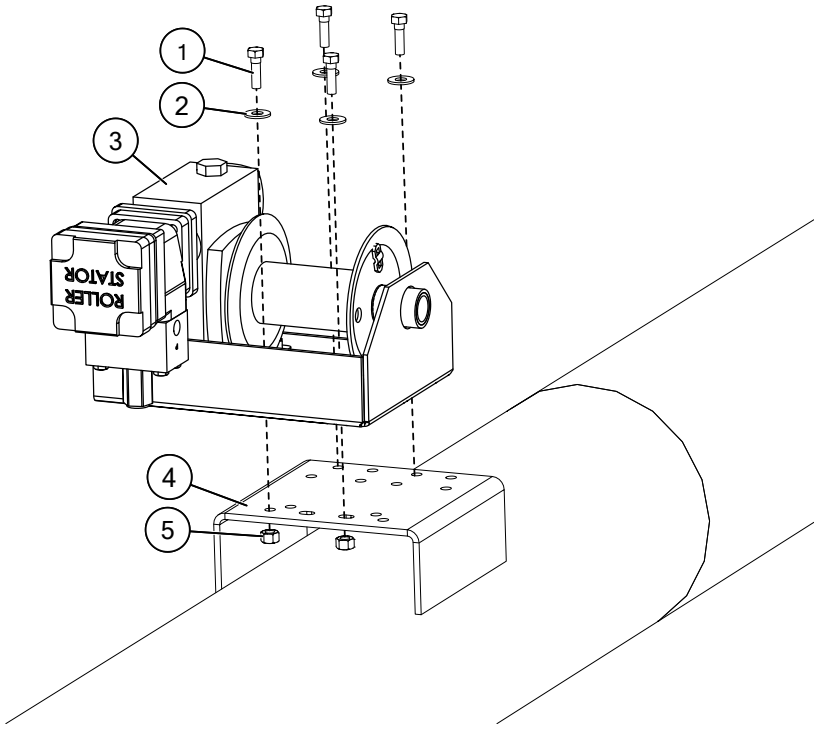

Attach the Hydraulic Hose

1. Wrap threaded seal tape around the exposed thread of the hydraulic fittings.
2. Attach the hydraulic fittings (1, 2, 3) and hoses (4) (see Figure 23).

Note
Protect hose ends from dirt.

Table 9. Hydraulic Winch Fittings and Hoses

Item	Description	Quantity
2	Swivel 3/8" PT/90D	2
3	Quick Coupling Nipple 1/2" FPT	2
4	Hose 3/8"	2

Figure 23. Attaching the Hydraulic Hoses

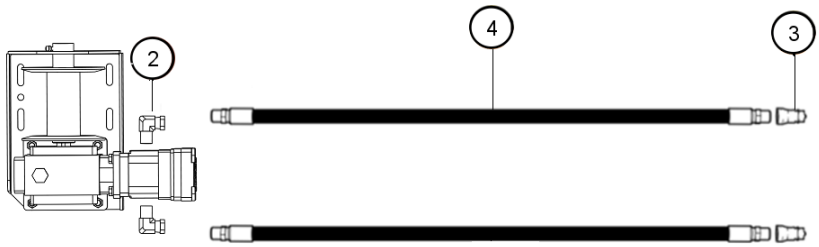

3.15. Attach the S-Drive

1. Attach the s-drive (5) to the brackets with 7/16" x 1" bolts (6), 7/16" flat washers (7), and 7/16" locknuts (8) (see Figure 24).

Table 10. Components to Install S-Drive

Item	Description	Quantity
5	S-Drive	1
6	7/16" x 1" Hex Bolt	6
7	7/16" Flat Washer USS	6
8	7/16" Nylock Nut	6

Figure 24. Attaching the S-Drive

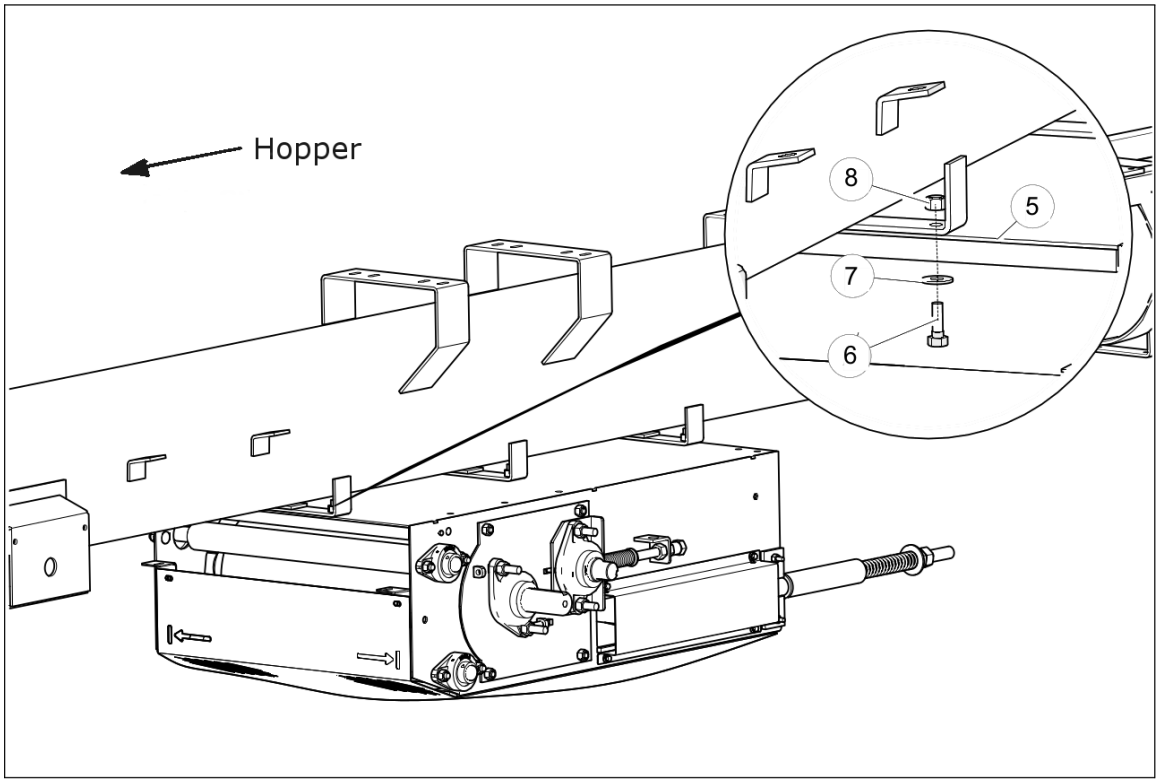

3.16. Install the S-Drive Front Guard

1. Attach the pinch drive front guard (9) to the s-drive with 1/4" x 3/4" bolts (10), 1/4" lock washers (13), 1/4" flat washers (12), and threaded inserts (11) (see Figure 25).

Table 11. Parts Required to Install S-Drive Front Guard

Item	Description	Quantity
9	Pinch Drive Front Guard	1
10	1/4" x 3/4" Hex Bolt	4
11	Threaded Insert 1/4" -20-.027-.165	4
12	1/4" Flat Washer	4
13	1/4" Lock Washer	4

Figure 25. Attaching the S-Drive Front Guard

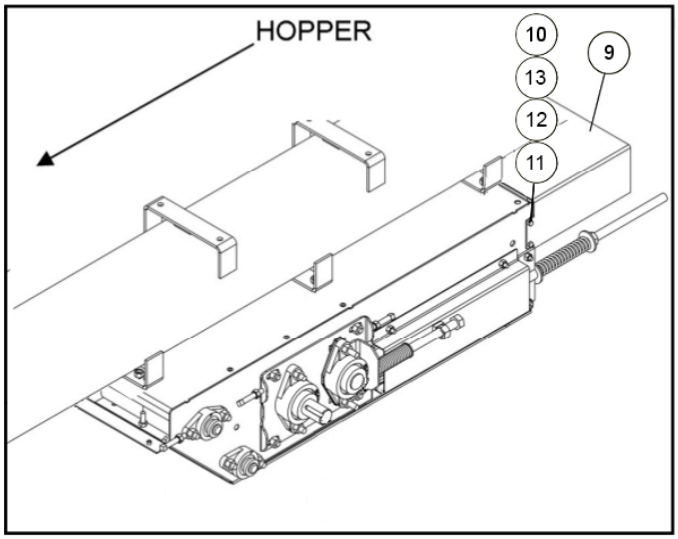

3.17. Assemble the Weather Guard

1. Install the types of weather guard sections in Table 12 which are indicated by the identifier letters as shown on your particular conveyor model schematic that follows.
2. Connect each weather guard section to the tube brackets as indicated by the position arrows on your particular conveyor model schematic that follows. Use a uni-mount cast plate (1), 3/8" x 1-1/4" capscrew (2), and 3/8" locknut (3). Leave the 3/8" locknuts loose (see Figure 26).

   NOTICE Overlap of the weather guard sections must be as shown to prevent belt damage.

3. Confirm all weather guard mount bar holes are aligned.
4. Tighten the 3/8" locknuts (3) after all of the weather guards have been installed.

Table 12. Identifiers for Types of Weather Guard Sections

Identifier	Type of Weather Guard Section	
A	3' (0.91 m) Standard	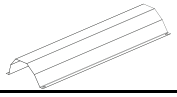
B	5' (1.52 m) Standard	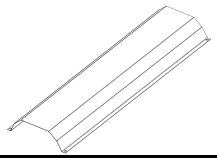

Table 12 Identifiers for Types of Weather Guard Sections (continued)

Identifier	Type of Weather Guard Section	
C	10' (3.05 m) Standard	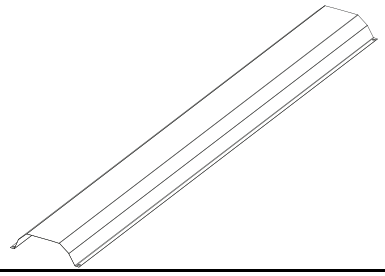
D	4' (1.22 m) Flared	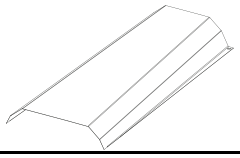
E	5' (1.52 m) Flared	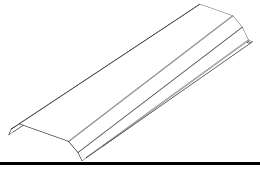
F	5' (1.52 m) Flat	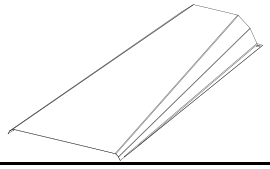
G	Guard -Above S-Drive	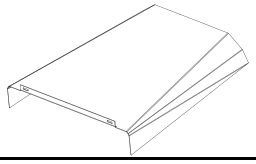
H	Upper Transition	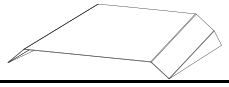
J	2' (0.61 m) Standard	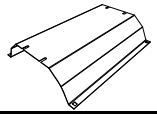
K	6' (1.83 m) Standard	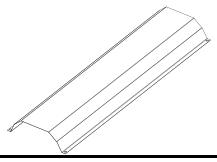

Table 13. Components to Install Weather Guard onto the Tube Bracket

Item	Description	Quantity
1	Uni-Mount Plate Cast	1
2	Capscrew 3/8" x 1-1/4" Flat Head Socket	1
3	Nylon Locknut 3/8"	1

Figure 26. Installing a Weather Guard Section

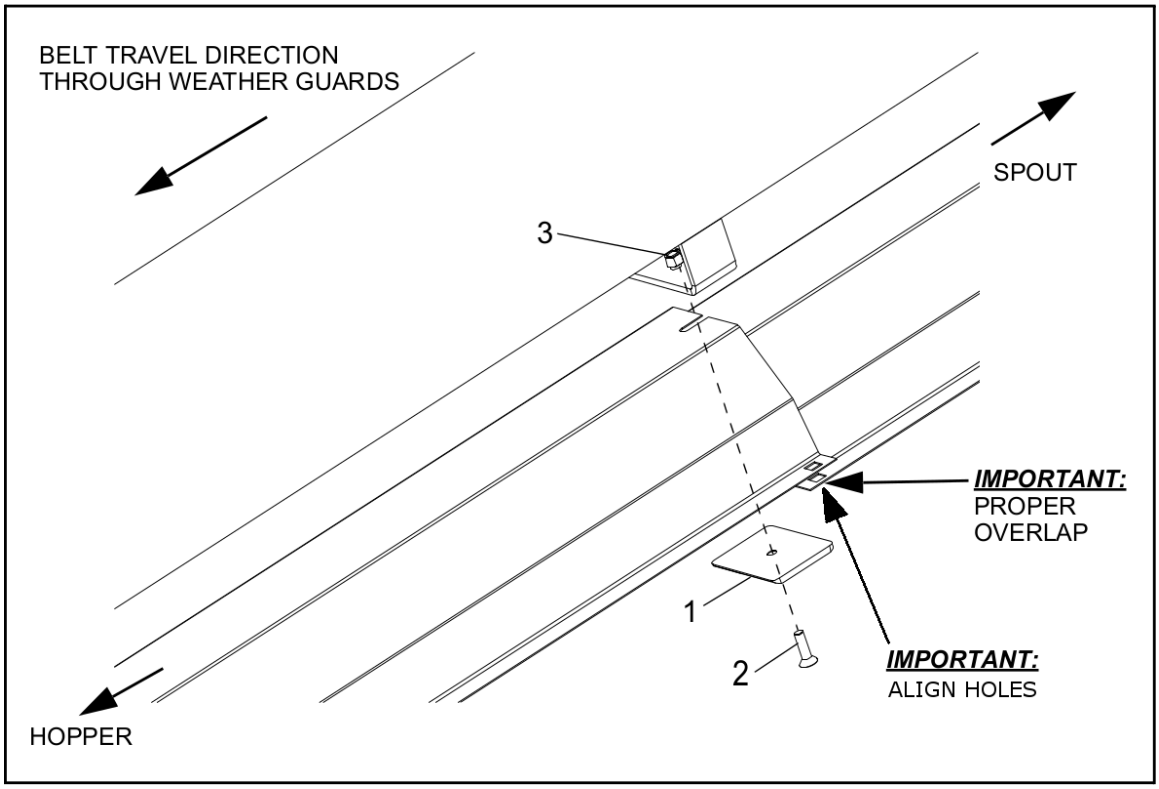

Figure 27. Weather Guard Section Locations

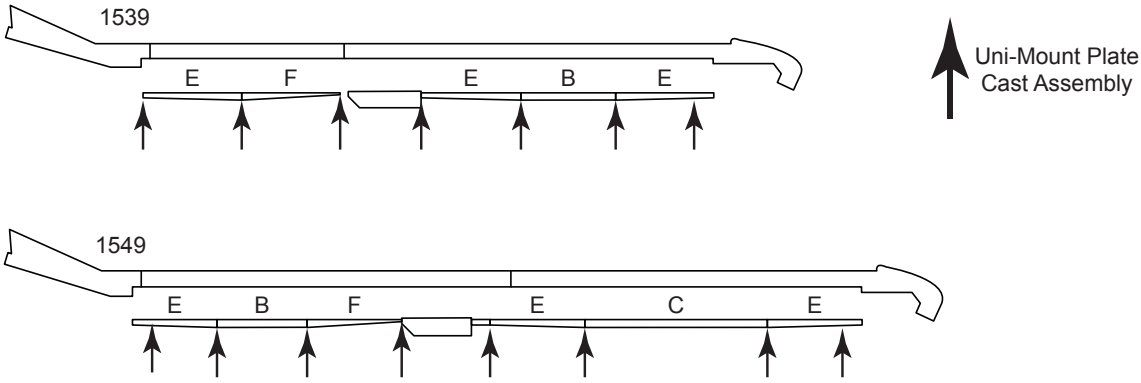

3.18. Install the Hopper Latch Hardware

Table 14. Latch Hardware

Item	Description
1	1/4" x 3/4" Carriage Bolt
2	Spacer
3	Tension Latch Clamp
4	1/4” Flanged Nut

Figure 28. Installing the Latch Hardware

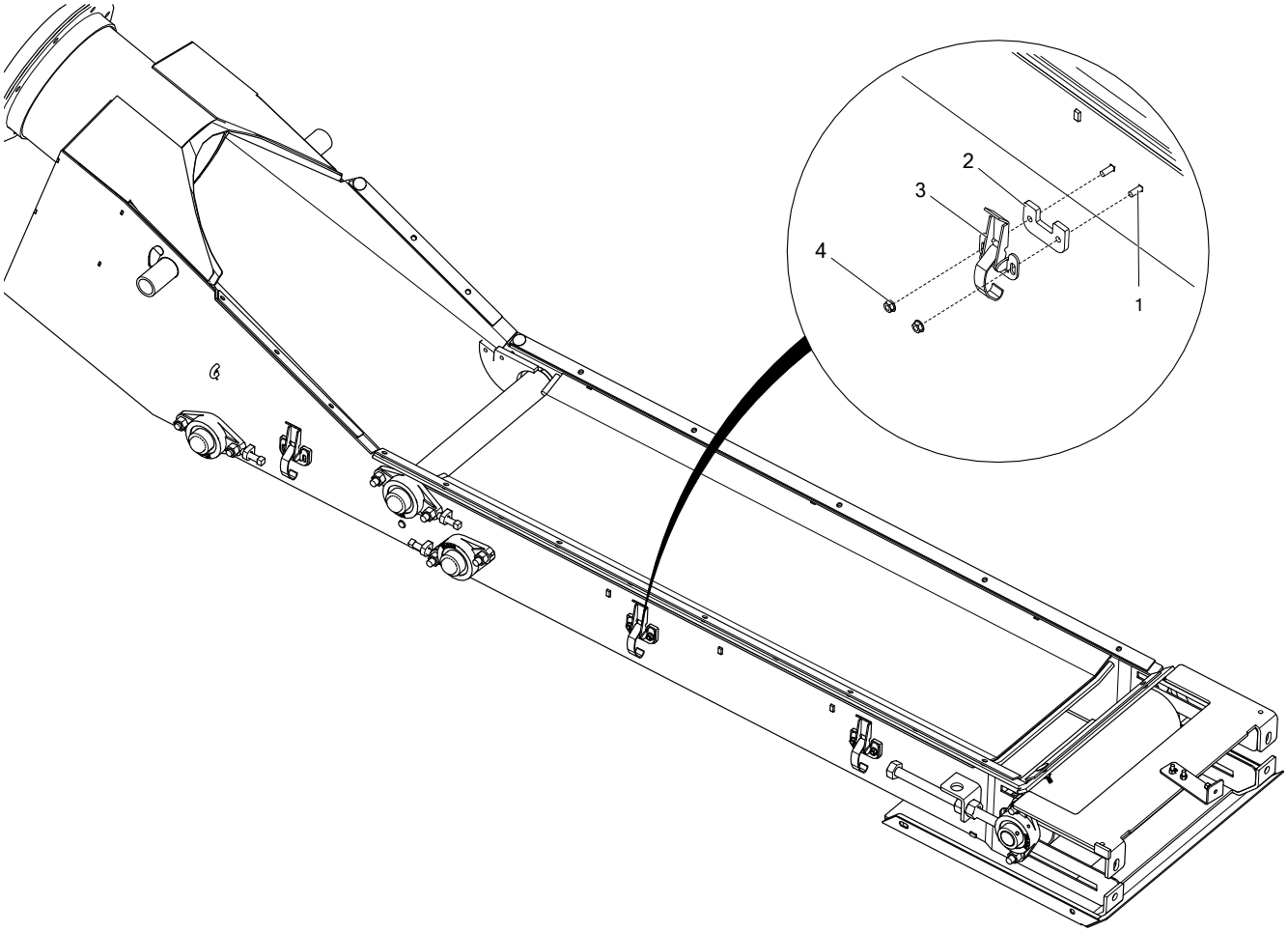

3.19. Install the Belt

This section describes how to install the conveyor belt in the tube. Refer to the packing slip for the length of the conveyor belt used in the installation.

Thread a Fish Tape through the Conveyor Tube

1. Place the rolled belt on a stand behind the hopper.
2. Pull the conveyor belt over the top of the hopper roller, until just inside the hopper, as shown below.

Figure 29. Rolled Belt Behind a Typical Hopper

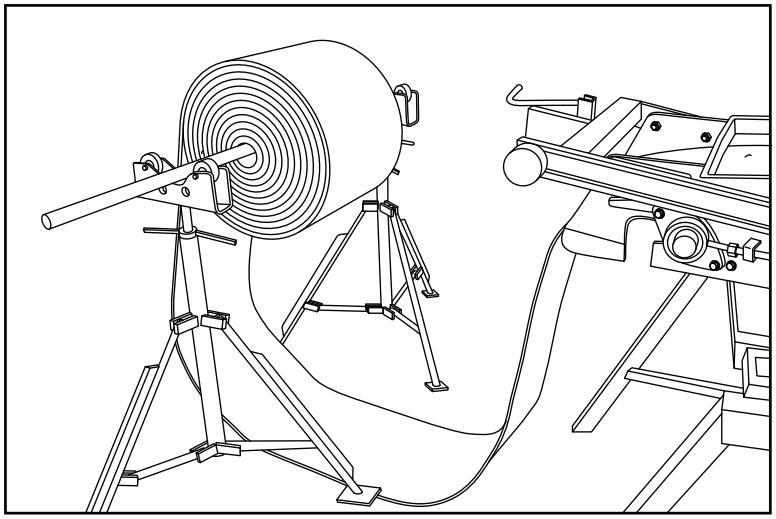

3. Feed a fish tape in at the spout, through the tube, and into the hopper.
4. Manually thread the belt around the transition rollers (1) in the hopper.

Figure 30. Belt Through Transition Rollers

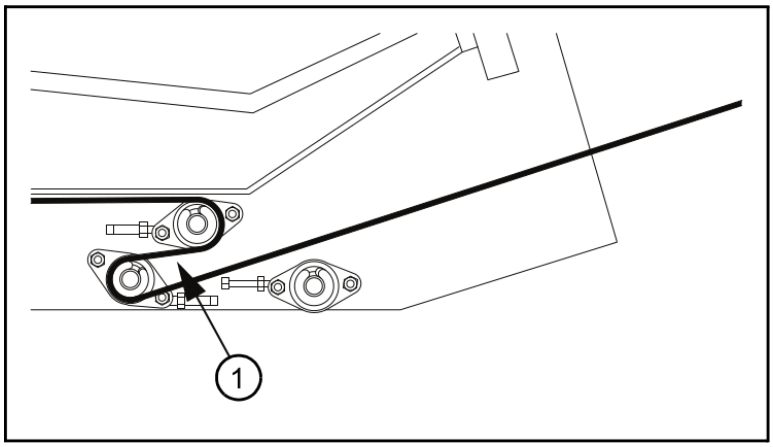

Item	Description
1	Transition Roller

5. Attach the end of the belt to the fish tape using a clamp, or use a short piece of belt and thread the connector wire through the lacing clips to connect.

Figure 31. Attaching the Short Belt Piece to the Belt

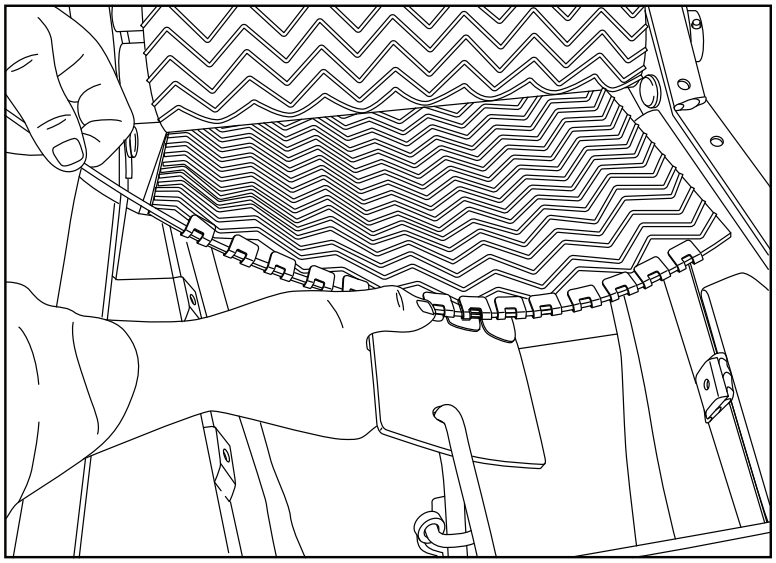

Thread the Conveyor Belt

1. From the spout end, pull the fish tape until the belt emerges from the spout.

Figure 32. Conveyor Belt Pulled Through the Spout

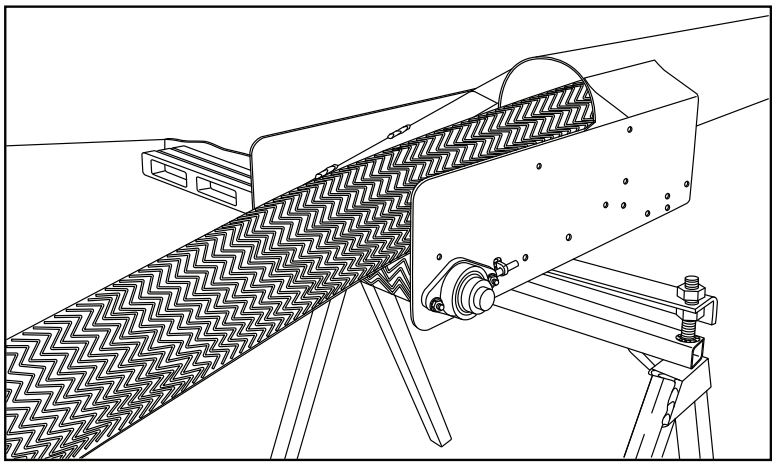

2. Wrap the belt around the spout roller and pull it back under the conveyor tube up to the s-drive.
3. Remove the s-drive bottom guard.
4. Loosen the s-drive pinch roller bolts and take-up roller bolts (on both sides of s-drive) to the end of their threads.

   Note

   Do not tighten the nuts on the pinch roller bolts and take-up roller bolts on the s-drive until the belt is fully installed.

5. Guide the belt through the s-drive as shown in the figure below.
6. Pull the conveyor belt out from the back of the s-drive until approximately 6' (1.8 m) of excess belt remains on the stand behind the hopper.

Figure 33. S-Drive Conveyor Belt Path

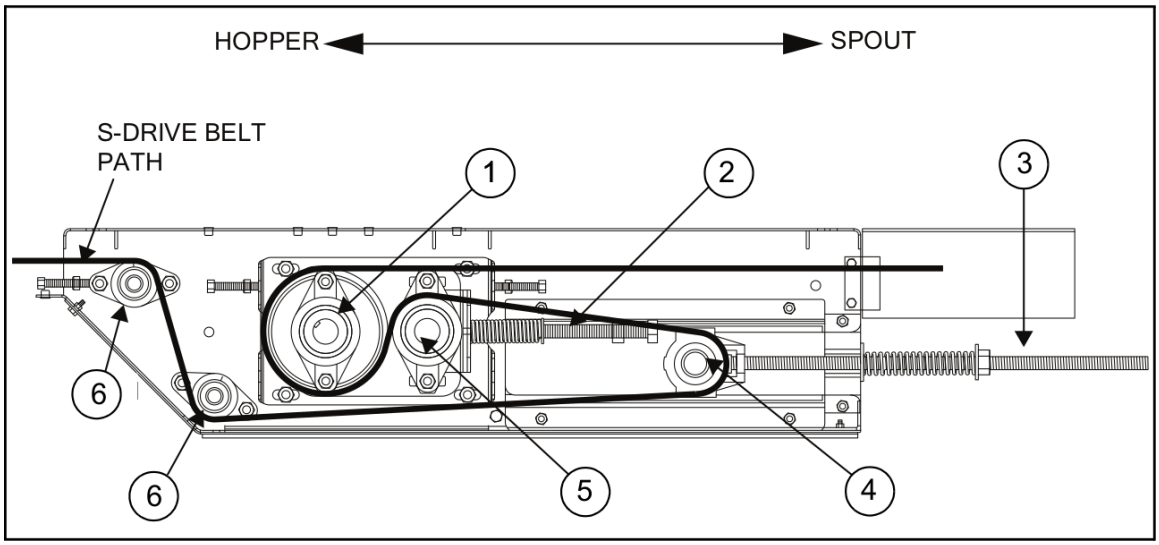

Item	Description
1	Drive Roller
2	Pinch Roller Bolt
3	Take-up Roller Bolt
4	Take-up Roller
5	Pinch Roller
6	Return Roller

7. Wrap the belt around the spout roller and back under the conveyor tube to the hopper.
8. Wrap the remaining conveyor belt around the hopper roller and under the tube.

Figure 34. Conveyor Belt Bottom Path

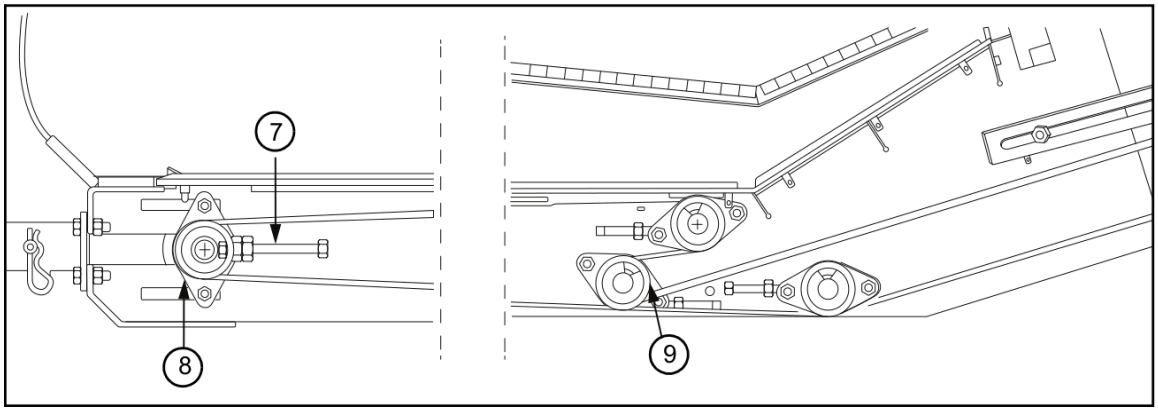

Item	Description
7	Hopper Roller
8	Take-up Bolt
9	Transition Roller

The conveyor belt is now ready to be connected.

Connect the Conveyor Belt

1. Attach a strap puller (1) to each end of the belt and secure with vise-grips (2).

   NOTICE Do not attach the vise grips too tightly, this can damage the belt.

2. Pull the ends of the belt together.
3. Install connector wire through the belt lacing (3).

Figure 35. Using a Strap Puller

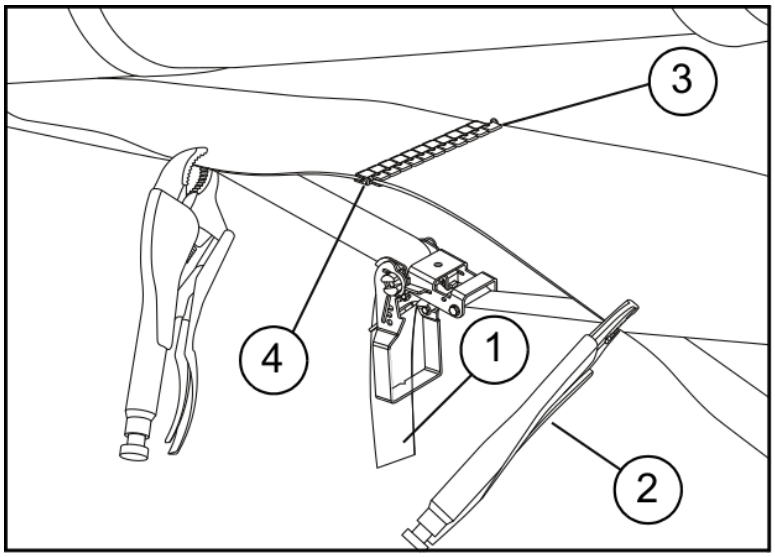

Item	Description
1	Strap Puller
2	Vise Grip
3	Belt Lacing
4	Lacing Pin

4. On both corners of the trailing edge of the belt, trim a tapered notch to prevent fraying.

Figure 36. Tapering the Trailing Edge of the Belt

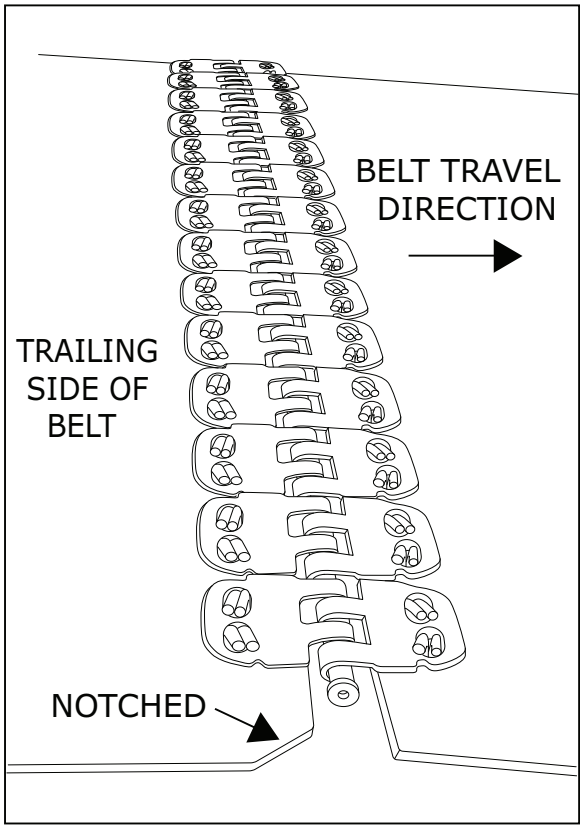

Tighten the Conveyor Belt

Use the s-drive take-up roller bolts to set the belt tension.

1. Tighten the take-up roller bolts (1) until the take-up springs are not visible.
2. Measure to be sure both sides are set at the same position.
3. Tighten the pinch roller bolts (2, both sides of s-drive) until the head of bolt contacts the pinch pipe (3).
4. Check to make sure the bolts on the pinch roller bearings are just loose enough to allow the pinch roller to kick back 1/4" during operation (when the belt seam passes through).
5. Re-attach the s-drive bottom guard.

Figure 37. S-Drive Roller Bolts and Pipes

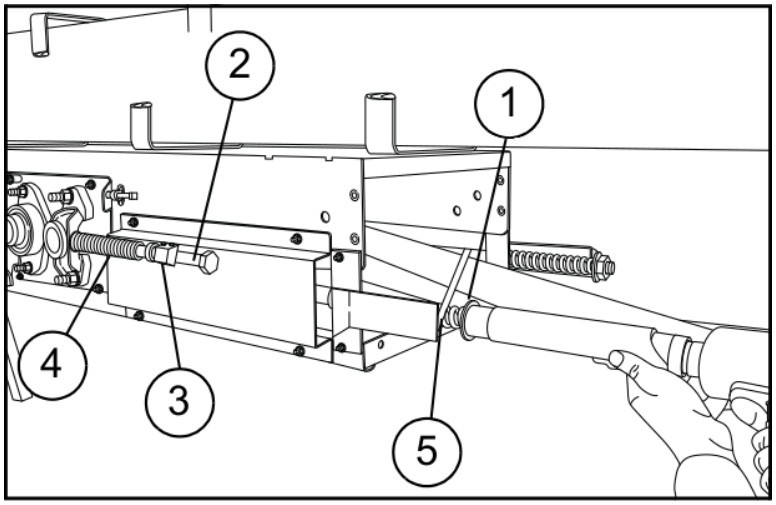

Item	Description
1	Take-up Roller Bolt
2	Pinch Roller Bolt
3	Pinch Pipe
4	Spring
5	Take-up Pipe

The belt will require final tension and alignment after the conveyor is fully assembled. Refer to the conveyor operation manual for complete instructions.

3.20. Attach the Hopper Underside Covers

Table 15. Underside Covers

Item	Description
1	Underside Cover, Front
2	Pin Spring
3	Underside Cover, Main

Figure 38. Installing the Underside Front Cover

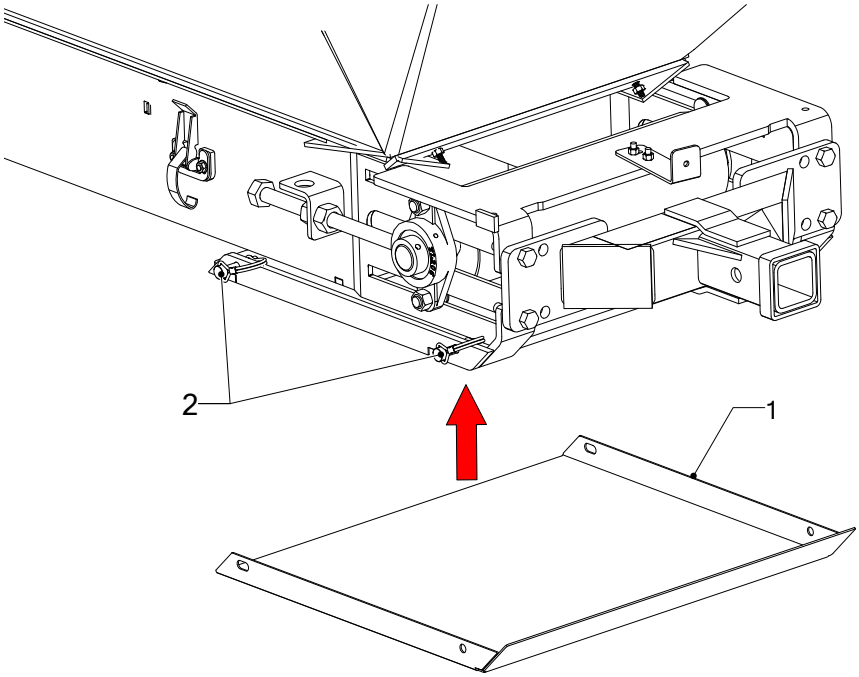

Figure 39. Installing the Underside Main Cover

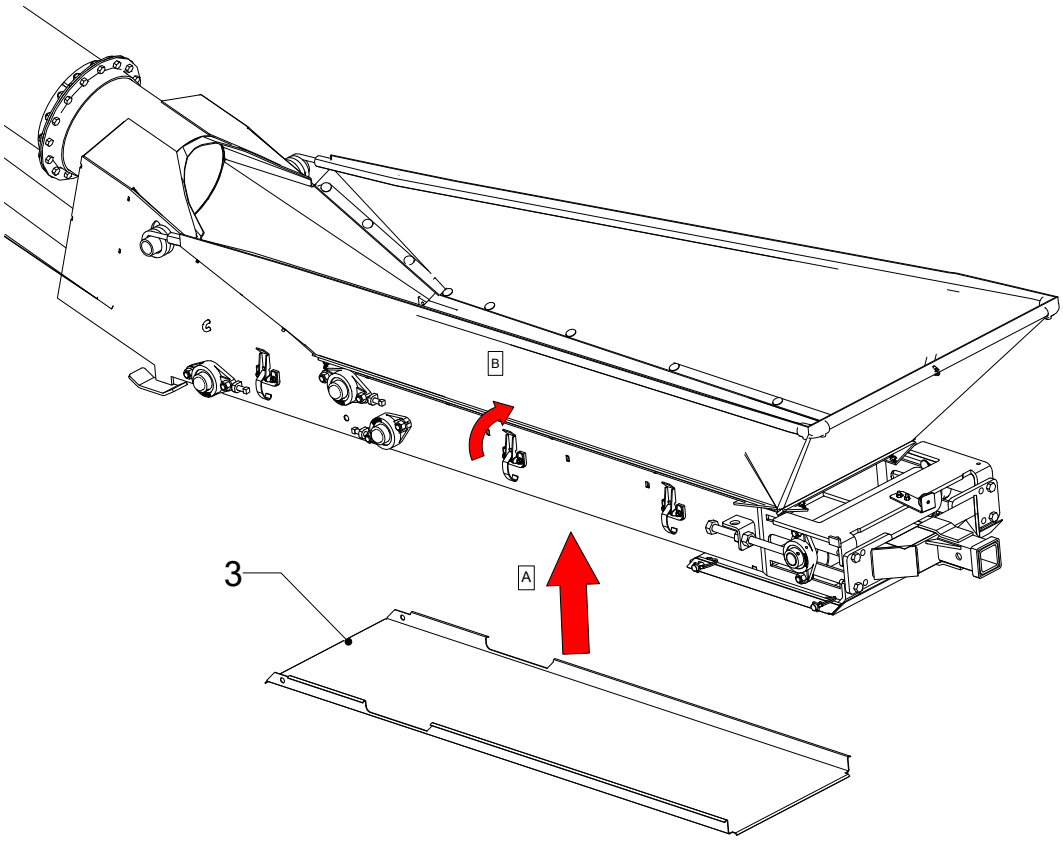

3.21. Install the Weather Guard Mount Bars

1. Install the types of mount bar assemblies in Figure 40 which are indicated by the position arrows and identifier letters as shown on your particular conveyor model schematic that follows.
2. Adjust the position on all weather guards and mount bars to achieve the best fit.
3. Tighten all nuts.

Table 16. Weather Guard Mount Bar Components

Item	Description
1	Mount Bar (Cross Bar with No Roller)
2	Mount Bar with Roller
3	Belt Guide Nylon Blocks
4	7/16" x 1" Carriage Bolt
5	7/16" Nylon Locknut
6	5/16" x 1-1/2" Carriage Bolt
7	5/16" Hex Nut
8	5/16" Lock Washer

Figure 40. Types of Mount Bar Assemblies

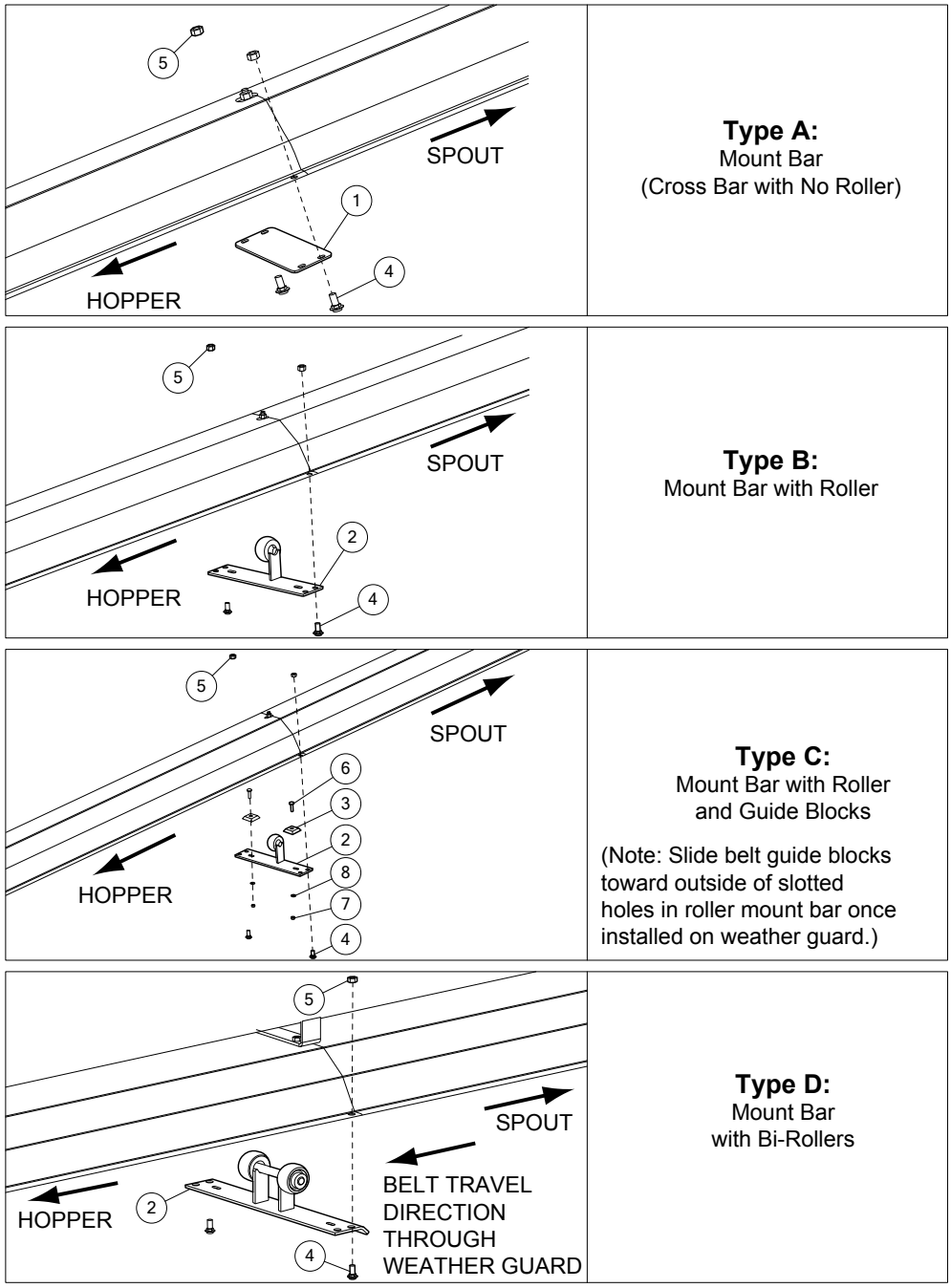

Figure 41. Mount Bar Schematic Diagram

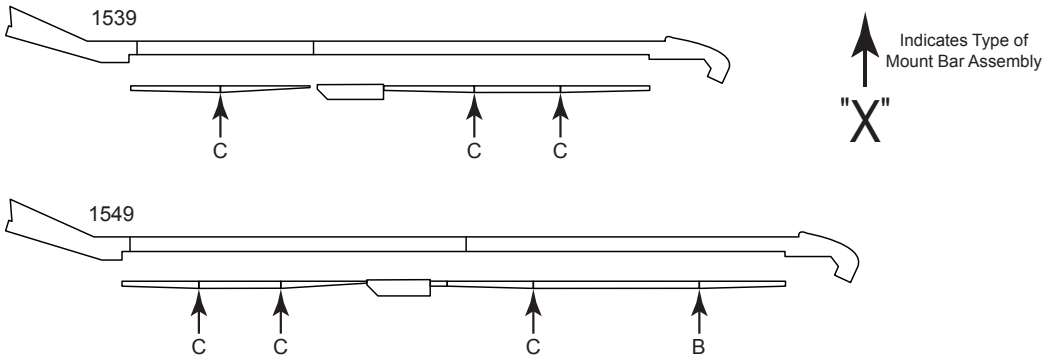

3.22. Install the Collapsible Hopper Cloth

Install the Flashing

1. Lay the front flashing (1) on the hopper while ensuring it is flush with the edge of the main hopper frame (see Figure 42).

   Note

   The textured side of the flashings should be facing down.

2. Install transition flashing (3) using 1/4" x 1" self-tapping screws (4), 1/4" flat washers (5), 1/4" x 1-1/4" flange bolts (6), and 1/4" hex nuts (7).
3. Lay the side flashings (2) on the hopper while ensuring they are flush with the edge of the main hopper frame and overlapping the front flashing.

Table 17. Flashings

Item	Description
1	Front Flashing
2	Side Flashing
3	Transition Flashing
4	1/4" x 1" Self Tapping Screw
5	1/4" Flat Washer
6	1/4" x 1-1/4" Flange Bolt
7	1/4" Hex Nut

Figure 42. Flashings

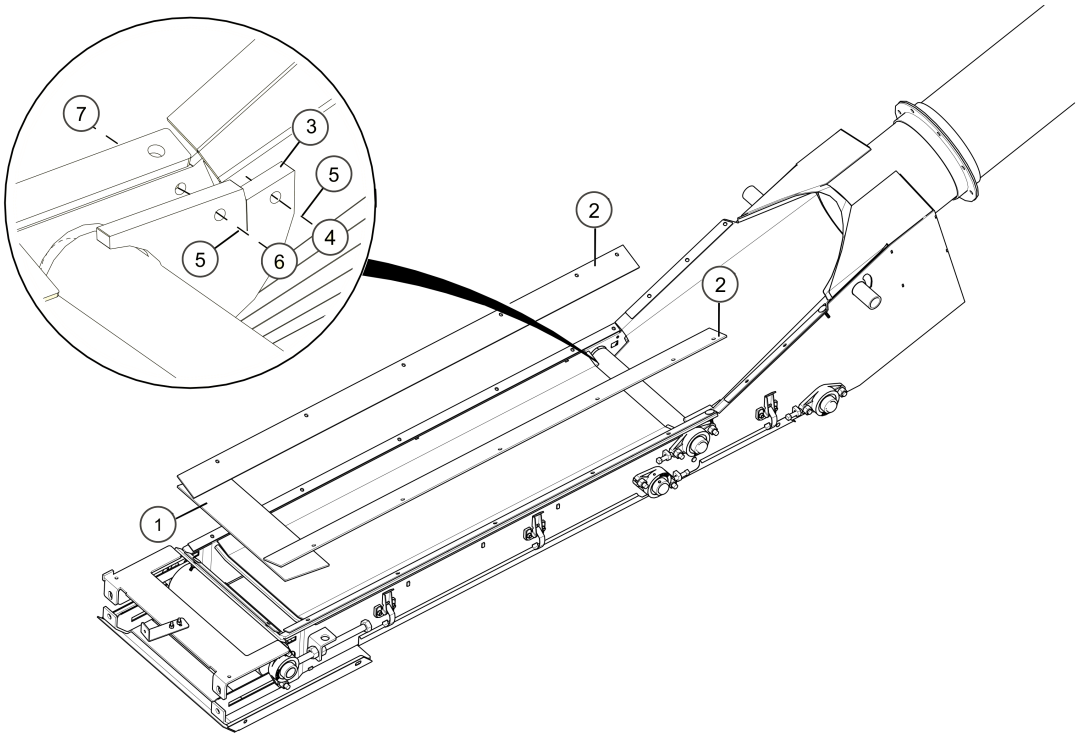

Install the Hopper Spring

1. Slide hopper spring over tubes on the sides of the hopper. See Figure 43 for correct spring orientation.
2. Rotate the spring so that the loop of the spring coil is locked in place by the slot. See Figure 44.

Figure 43. Installing the Hopper Springs

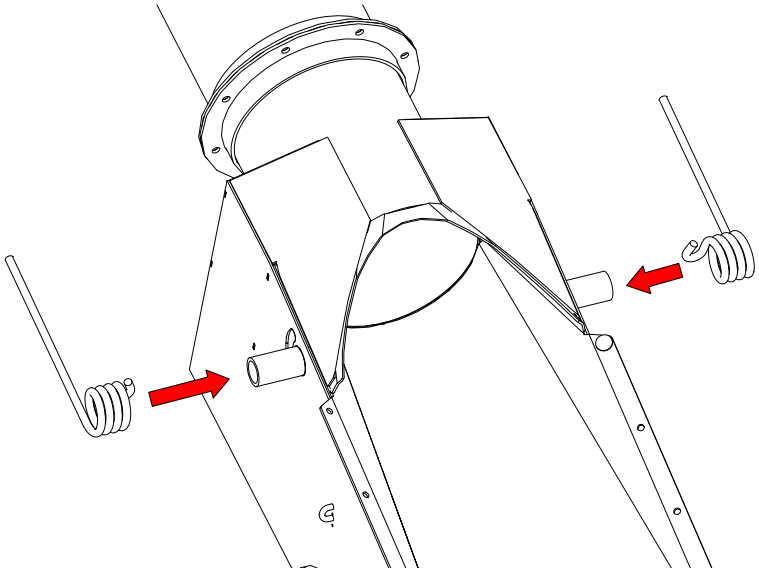

Figure 44. Lock the Hopper Spring

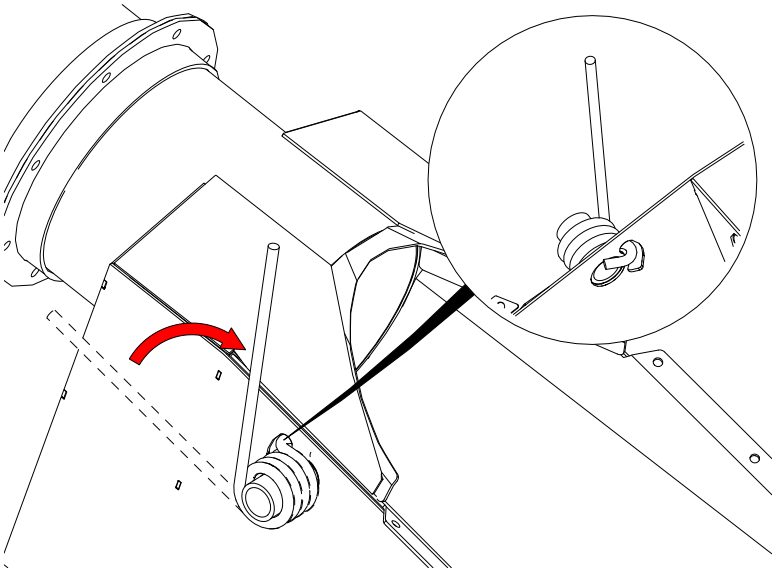

Install the Hopper Cloth

1. Slide the tubes (1, 2) into the hopper cloth (4).
2. Connect the front corners with the slip-on rail fittings (3). Orient the fittings so that the Allen screws are facing down. See Figure 45.

Table 18. Components for Installing the Hopper Cloth onto the Conveyor

Item	Description	Quantity
1	1/2" Pipe Sch 80 (Side)	2
2	1/2" Pipe Sch 80 (Front)	1
3	1/2" Slip-on Rail Fittings	2
4	Hopper Cloth	1
5	1/4" x 1-1/4" Elevator Bolt	20
6	1/4" Nut	20
7	Split Loom (length in feet)	19

Figure 45. Installing the Hopper Cloth Tubes

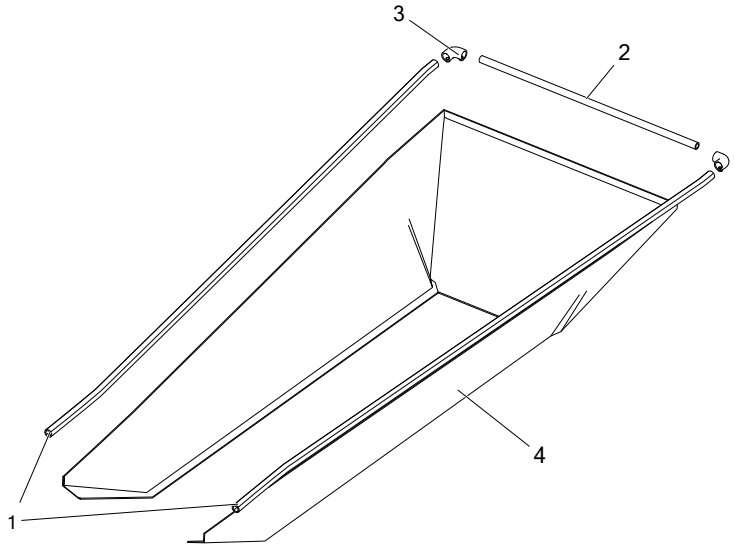

3. Tighten the Allen screws to secure the tubes in place.
4. Slide the open end of the tubes (1) over the hopper springs. See Figure 46.

Figure 46. Installing the Hopper Cloth

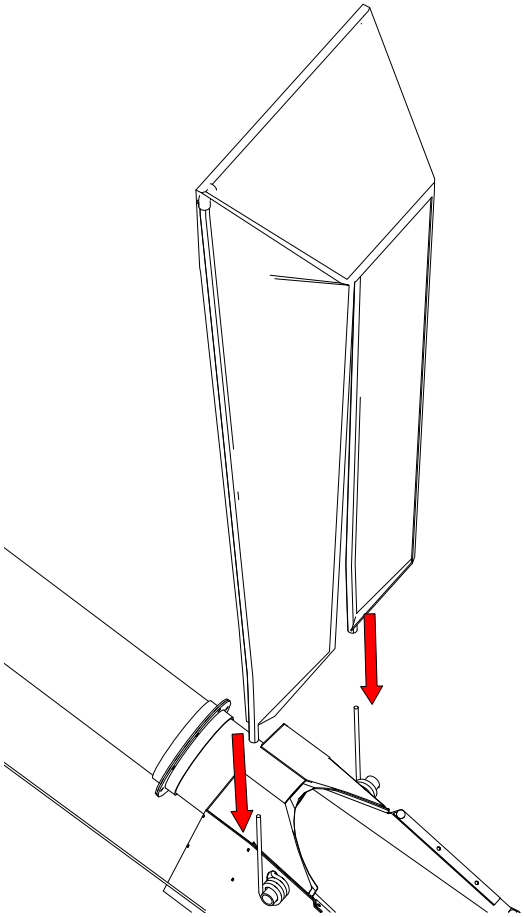

5. Pull the upper front frame down until the bottom of the cloth touches the front flashing, and hold it in place with a bungee cord around the front frame of the hopper weldment (see Figure 47).

   Note

   The length of the upper side frames provides leverage to pull the upper front frame down against the opposing torque of the springs.

Figure 47. Holding Upper Frame with Bungee Cord

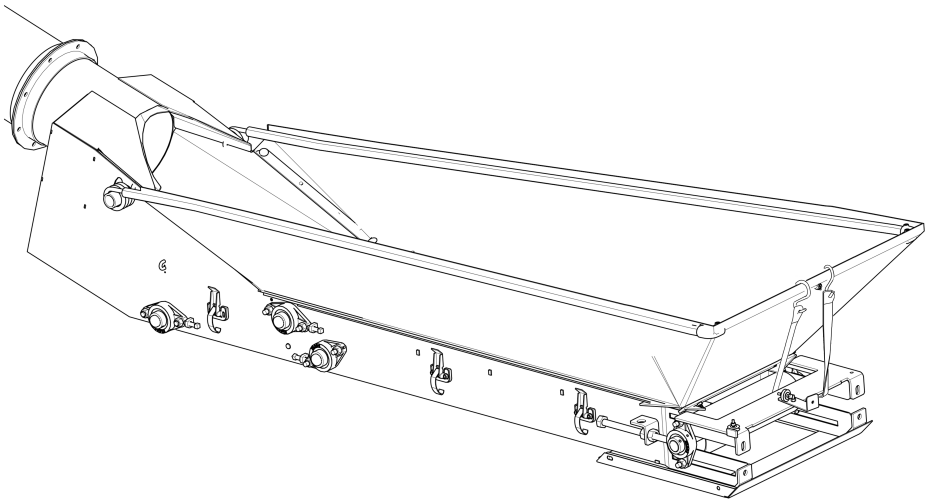

6. Attach the hopper cloth to the conveyor (see Figure 48):
   - First, attach the front of the hopper cloth to the front flashing. Afterward, attach the sides.
   - Drill through the hopper cloth and use the existing holes as a guide through the lower frames, flashings, and hopper weldment.
   - Fasten using 1/4" x 1-1/4" elevator bolts (5) and 1/4" nuts (6).

Figure 48. Installing the Hopper Cloth onto the Conveyor

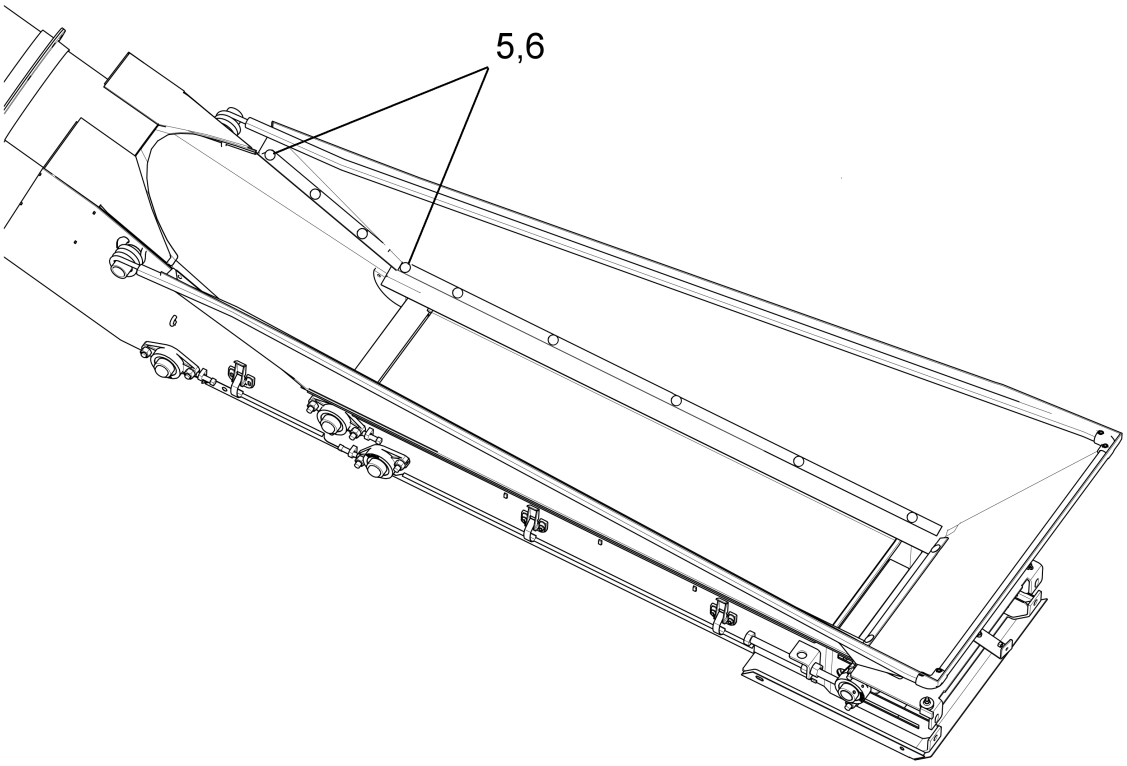

7. Open split loom (7) along the slit and snap over the upper frame to secure hopper cloth.

3.23. Install the Collapsible Hopper Cloth Controls

Install the Handle

1. Attach the hopper handle (1) to the handle mount using a 3/8" x 1–1/2" bolt (2), 3/8" nylon washer (3), and two 3/8" hex nuts (4) (see Figure 49).

   Note

   Ensure the handle can pivot after tightening the bolt.

Table 19. Handle Components

Item	Description
1	Hopper Handle
2	3/8" x 1–1/2" Hex Bolt
3	3/8" Nylon Washer (USS)
4	3/8" Hex Nut

Figure 49. Installing the Handle

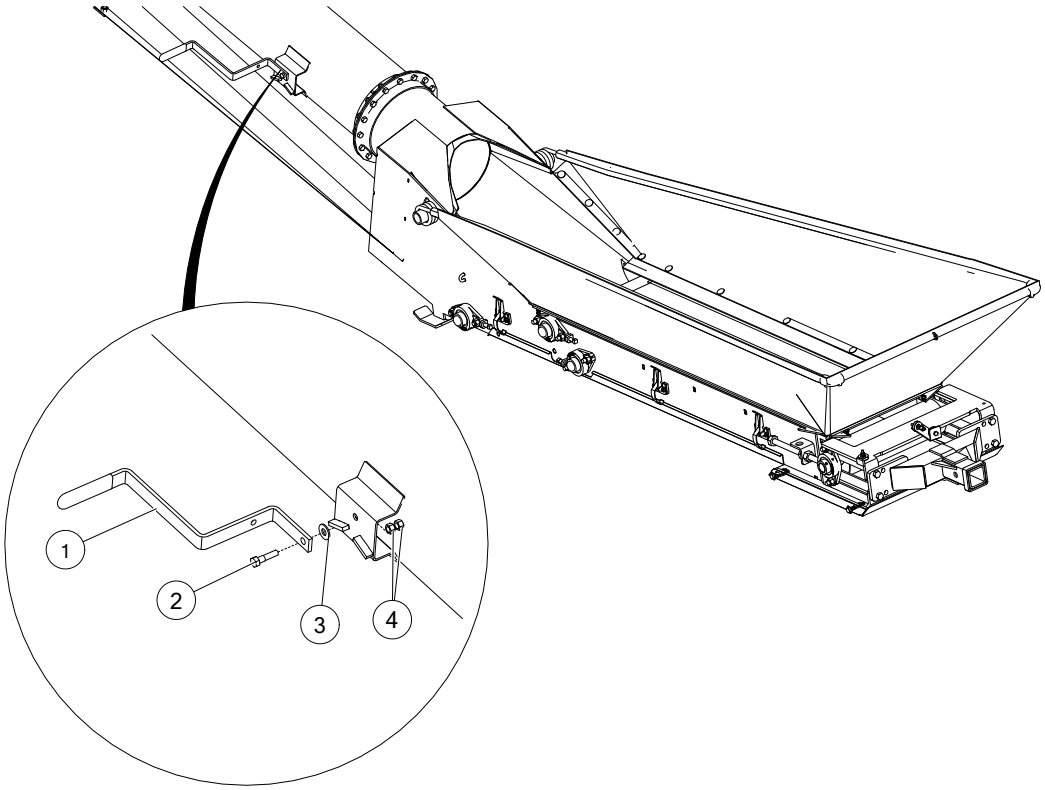

Install the Cable and Clamps

1. Point the hopper handle toward the hopper (see Figure 50).
2. Secure the cable (1) to the handle with a cable clamp (2).
3. Route the cable through the cable rung (3) and around the cable sheaves.
4. Attach a 7/8" cable clamp (4) to the front upper frame using one 5/16" x 1" bolt (5), one 5/16" nut (6) and two 5/16" flat washers (7). See Figure 51.
5. Loop the cable (1) around the 5/16" x 1" bolt (5) and secure with 1/4" cable clamp (2).
6. Test the function of the collapsible hopper cloth controls by raising and lowering the handle. Adjust cable tension as required.

Table 20. Cable and Clamp Components

Item	Description
1	1/8" Cable 13' [4.0 m] or 17' [5.2 m] depending on model
2	1/4" Cable Clamp
3	Cable Rung
4	7/8" Cable Clamp
5	5/16" x 1" Bolt Gr8 Plated

Table 20 Cable and Clamp Components (continued)

Item	Description
6	5/16" Nylon Locknut Gr8
7	5/16" Flat Washer Plated USS

Figure 50. Installing the Cable and the Clamps

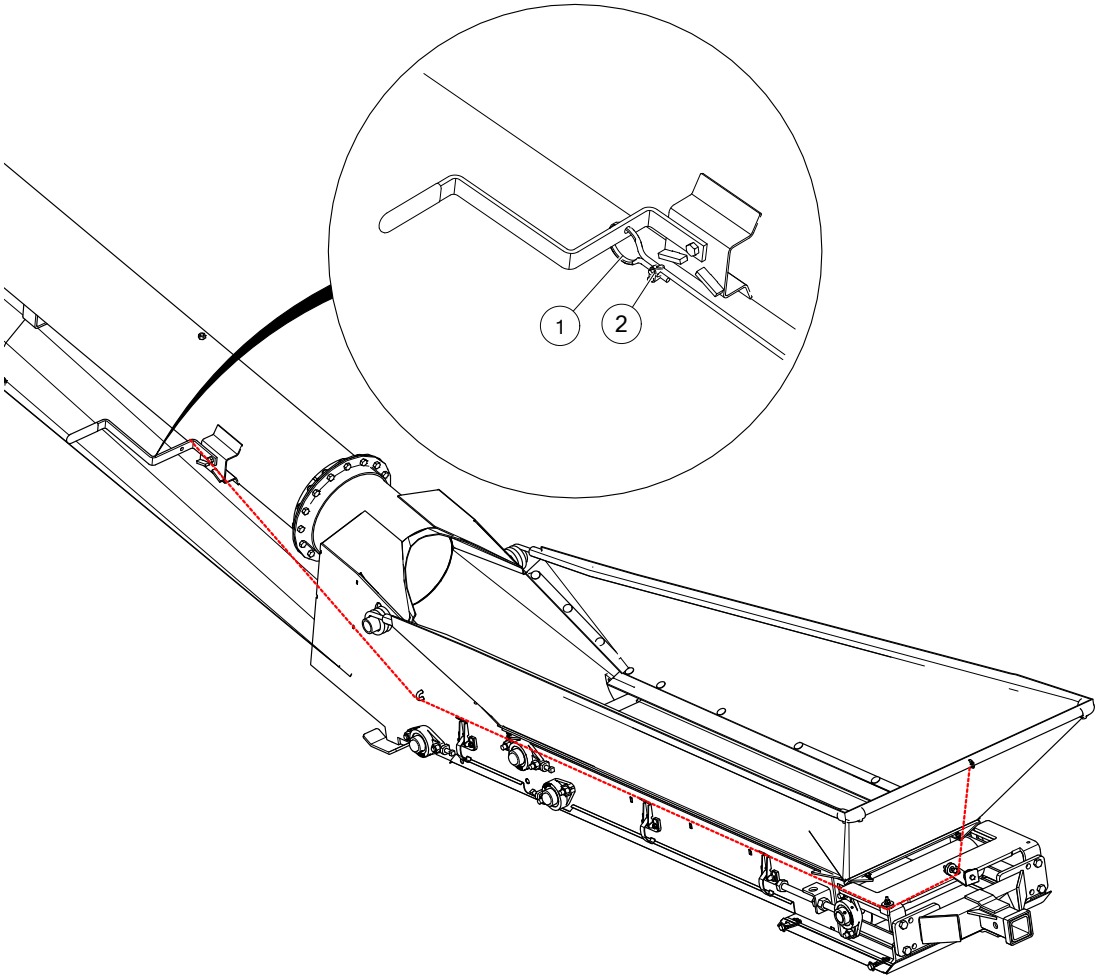

Figure 51. Attaching the Cable to the Hopper Frame

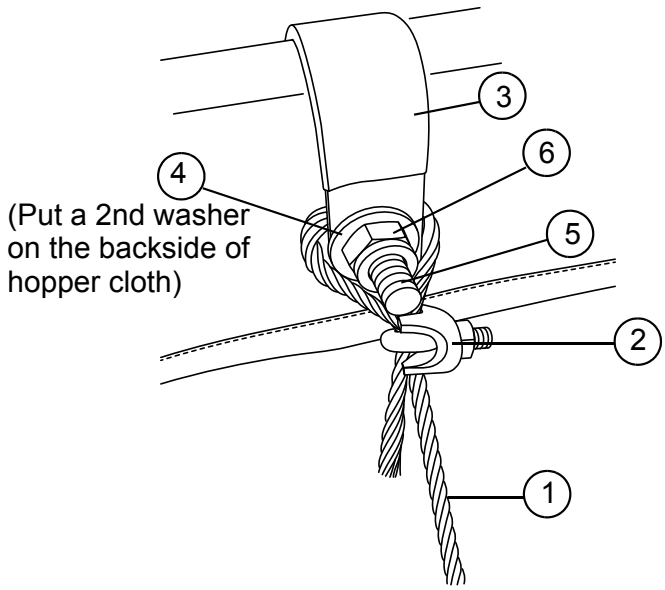

3.24. Attach the Angle Indicator

Attach the angle indicator bracket (1) to the weather guard bracket using plate (2), 1/4" x 3/4" carriage bolts (3) and 1/4 flanged nuts (4). See Figure 52.

Important

Ensure that the angle indicator base is level with the flat top of the weather guard.

Table 21. Angle Indicator

Item	Description
1	Angle Indicator Bracket
2	Plate
3	1/4" x 3/4" Carriage Bolt
4	1/4” Flanged Nut

Figure 52. Installing the Angle Indicator

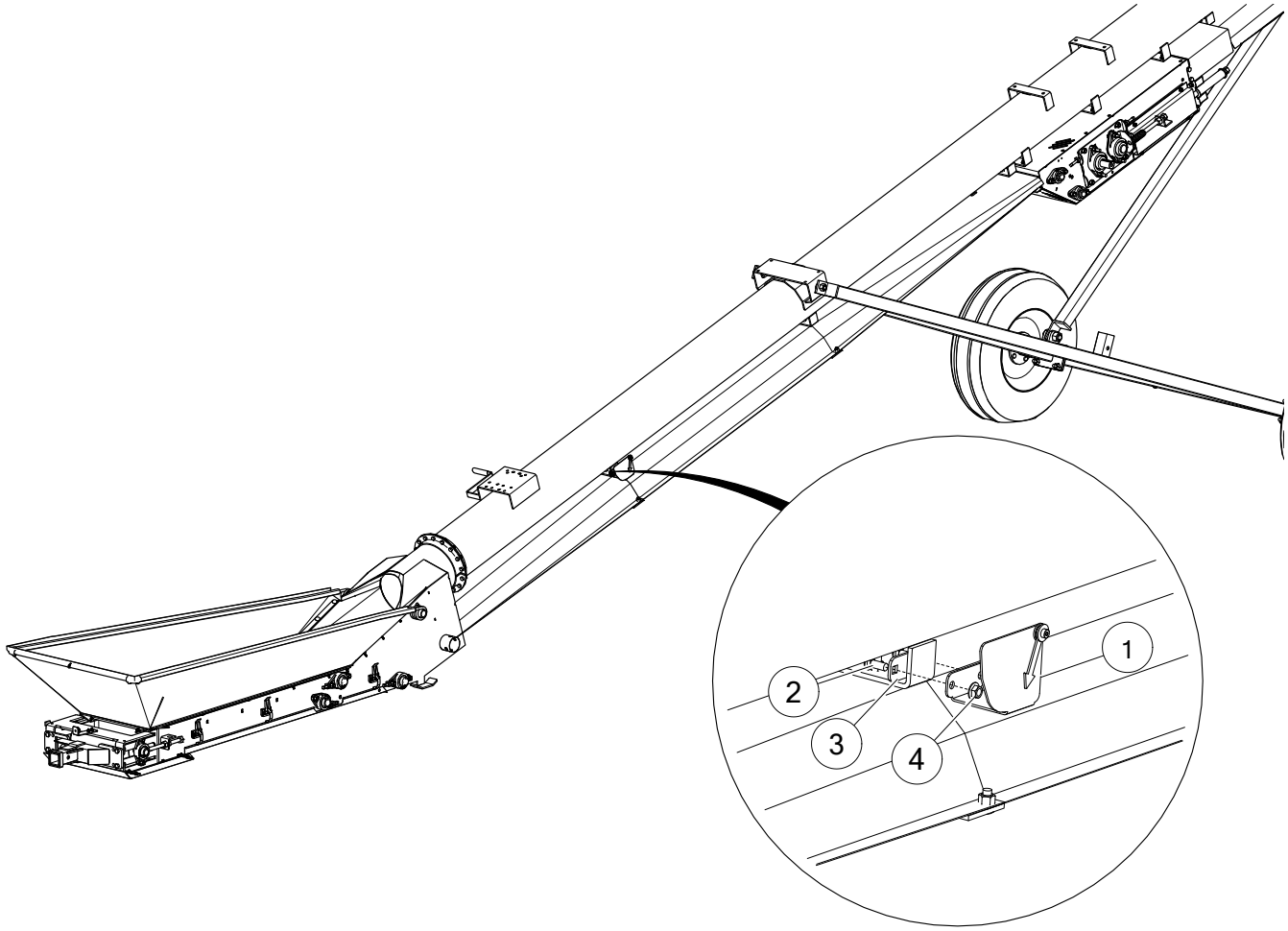

3.25. Attach the Hitch

1. Attach the hitch (1) to the hopper weldment using 1/2" x 2" bolts (2), 7/16" flat washers (3) and 1/2" nuts (4).
2. Insert the tongue (5) into the tongue stub.
3. Secure the tongue in place using 5/8" x 3" hitch pin (6) and 3/16" x 3–1/4" hairpin (7).

Table 22. Hitch Components

Item	Description	Quantity
1	Hitch FL (1 PC)	1
2	1/2" x 2" Bolt	4
3	7/16" Flat Washer	4
4	1/2" Nylock Nut	4
5	Tongue - Drop FL	1

Table 22 Hitch Components (continued)

Item	Description	Quantity
6	5/8" x 3" Hitch Pin	1
7	3/16" x 3-1/4" Hairpin	1

Figure 53. Hitch Components

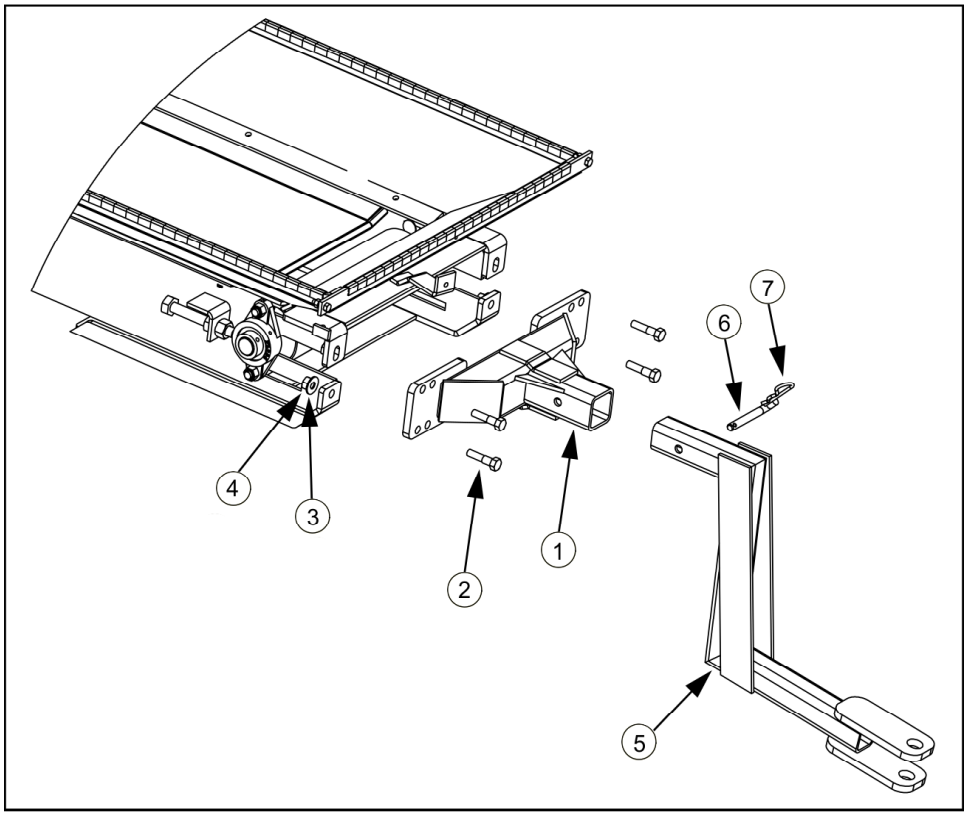

3.26. Install the Spout Hood

1. Place the hood (2) around the bearing assembly (see Figure 54).
2. Use 1/4" x 1" self-tapping screws (3) and 1/4" flat washers (4) to tighten the hood (2) to the conveyor spout (1).

   Note

   Make sure the screws will not interfere with belt operation.

Table 23. Spout Hood Components

Item	Description	Quantity
1	Spout Assembly	1
2	Hood	1

Table 23 Spout Hood Components (continued)

Item	Description	Quantity
3	1/4" x 1" Self-Tapping Screw	4
4	1/4" Flat Washer	4

Figure 54. Installing Spout Hood

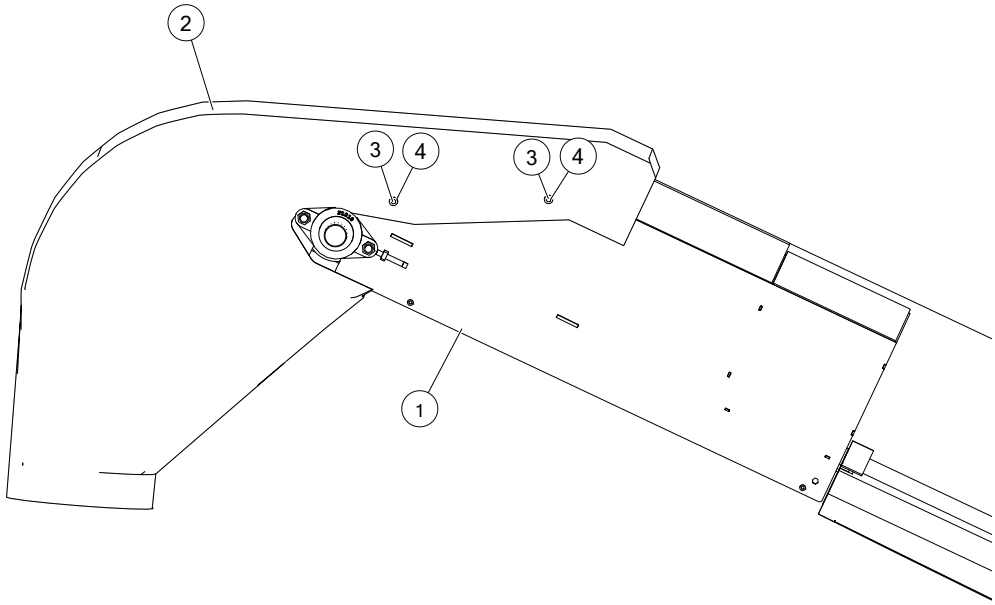

3.27. Install the Wheels

1. Check if the pressure of tires matches the pressure indicated on the tire sidewall.
2. Mount the wheels (1) to the axle (2) with wheel bolts (3) provided (see Figure 55).

Table 24. Components to Attach the Wheels to the Axle

Item	Description
1	Tire Assembly
2	Axle
3	Wheel Bolt

Figure 55. Attaching the Wheels to the Axle

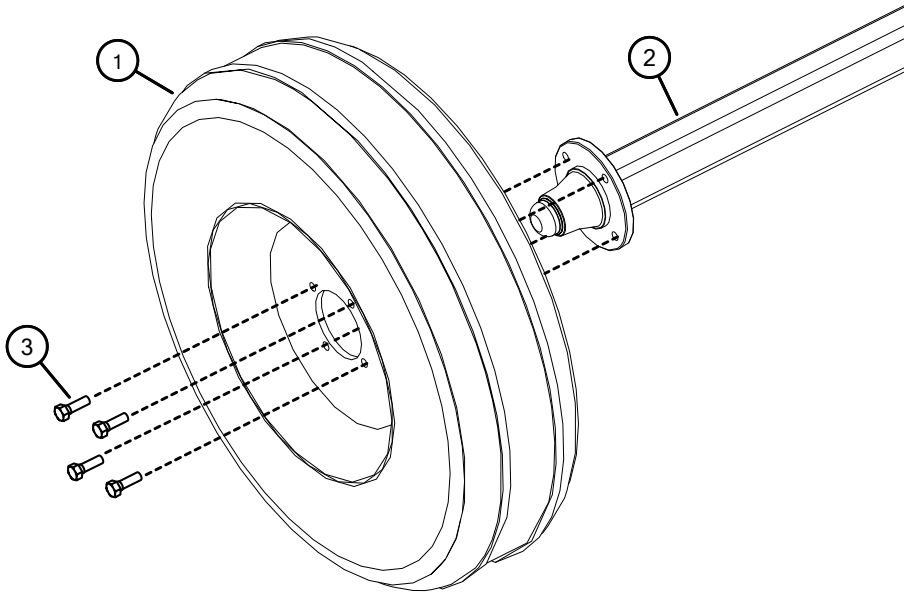

Note

Wheels may have four or six bolts, depending on the model of conveyor.

3.28. Assemble the A-Frame

Ensure the wheels are mounted to the axle before beginning this procedure.

1. Loosely fasten the axle arms (9) to the axle (12) using one 5/8" x 5" bolt (15), three 5/8" x 2" bolts (13), five 5/8" flat washers (14), and four 5/8" nylon locknuts (8).

   Note

   The axle arms will be tightened after the upright arms have been installed.

2. Fasten the axle arms to the suspension bracket using 3/4" x 2" hex bolts (11) and 3/4" nylon locknuts (10).
3. Secure the slider (4) to the end of the track (towards the spout) using vise-grips.

4. Fasten upright arms (2) to the slider (4) using 3/4" flat washers (1) and 1/4" x 2" cotter pins (3).
5. Lift the spout end of the tube until the loose ends of the upright arms align with their brackets on the axle.
6. Fasten the upright arms to the axle using 1" x 3" hex bolts (6) and 1" nylon locknuts (5).
7. Tighten the bolts that fasten the axle arms to the axle.
8. Lower tube and remove vise grips.

   WARNING Do not remove the tube support(s) until the conveyor is fully assembled.

Table 25. Components to Assemble the A-Frame

Item	Description
1	3/4" Flat Washer (plated USS)
2	Upright Arm
3	1/4" x 2" Cotter Pin
4	Slider
5	1" Nylon Locknut
6	1" x 3" Hex Bolt
8	5/8" Nylon Locknut
9	Axle Arm
10	3/4 " Nylon Locknut
11	3/4" x 2" Hex Bolt
12	Axle
13	5/8" x 2" Hex Bolt
14	5/8" Flat Washer (plated USS)
15	5/8" x 5" Bolt

Figure 56. Assembling the A-Frame

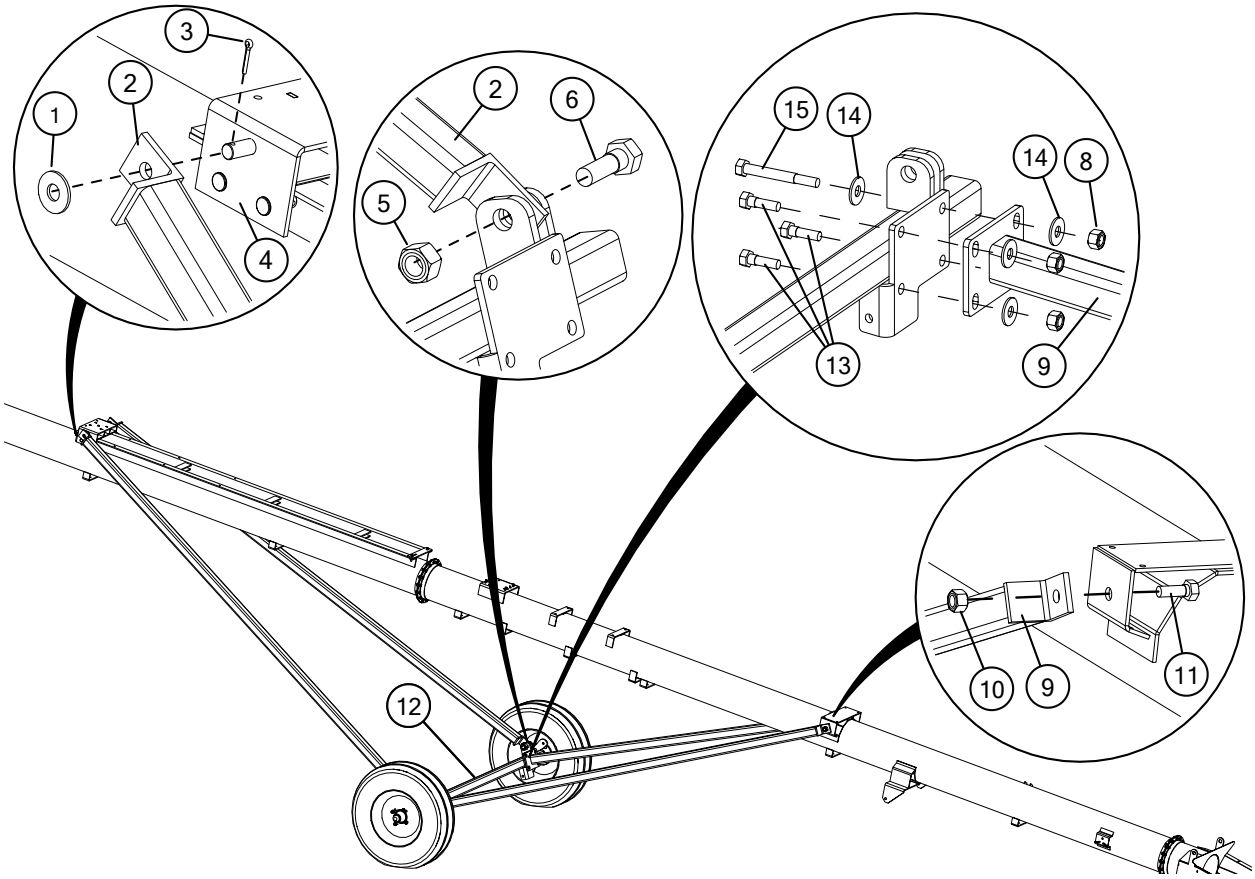

3.29. Install the Tube Lift Cable

1. Wrap the cable (1) around the bottom side of the winch drum with three complete wraps around the drum when conveyor is in transport position (see Figure 57).

   WARNING Failure to follow could result in conveyor collapse and cause serious injury.

2. Thread cable onto drum and secure with spool anchor.
3. Run the cable towards the spout.
4. **For models with a hand winch:** Route the cable through the motor mount pipe (see Figure 58).

   Note

   If your model has a hydraulic winch, then the winch is mounted closer to the spout than the s-drive, so routing the cable through the motor mount pipe is not necessary in that case.

5. Thread the cable through the slider pulley.
6. Run the cable from the slider pulley towards the hopper and stop at the cable attach (3).
7. Loop the cable under and around the cable attach and secure it with two 5/16" cable clamps (2).
8. Trim excess cable.
9. Test the function of the winch by lifting the conveyor to its raised position.

WARNING Crushing/impact hazard

Do not stand under the conveyor while testing the winch. The conveyor may drop unexpectedly. Ensure all equipment and personnel are clear of the conveyor while testing the winch.

NOTICE The tube lift components may become damaged.

Stop the test if anything should slide, slip, or jam. Correct the issue before continuing.

Table 26. Tube Lift Cable Components

Item	Description
1	**39' Conveyor**: • for hand winch – 40' Cable 5/16" 7 x 19 GAC • for hydraulic winch – 44' Cable 5/16" 7 x 19 GAC
	49' Conveyor: 44' Cable 5/16" 7 x 19 GAC (both hand winch and hydraulic winch)
2	5/16" Cable Clamp
3	Small Cable Attach

Figure 57. Installing the Tube Lift Cable

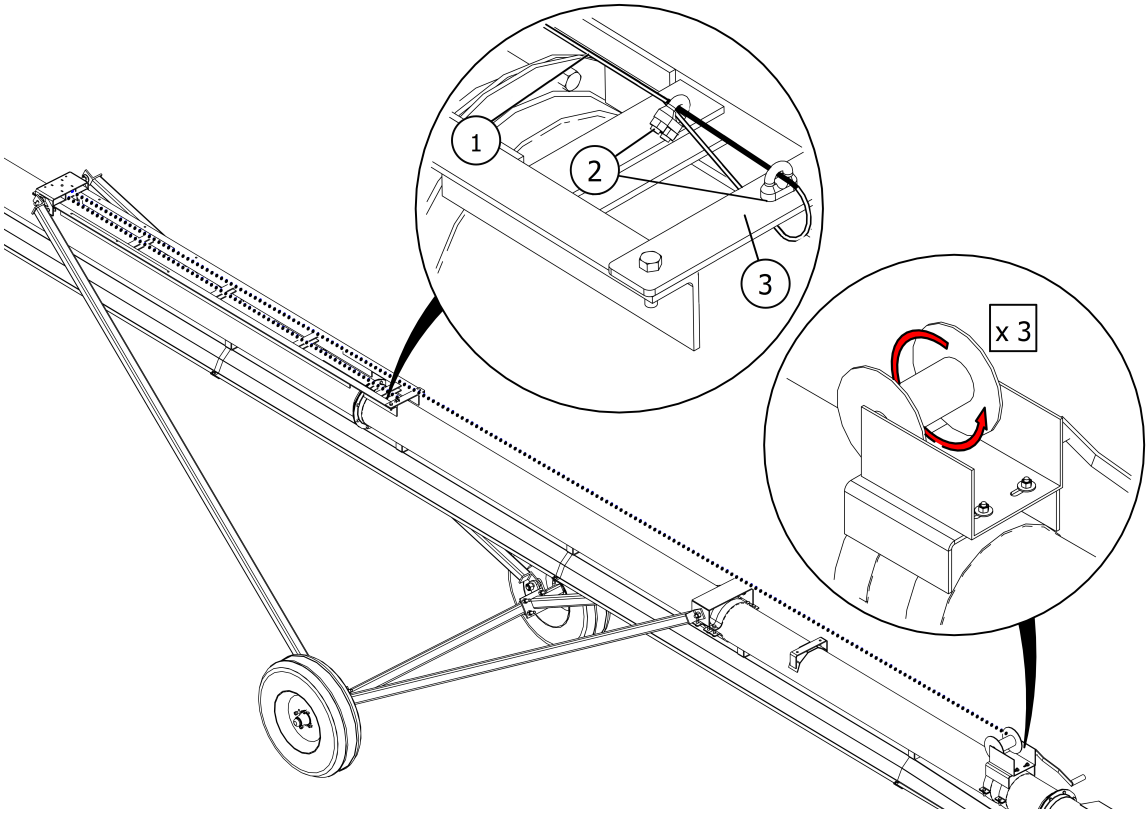

Note

The preceding figure depicts a hand winch.

Figure 58. Routing Cable through Motor Mount Pipe (if equipped with Hand Winch)

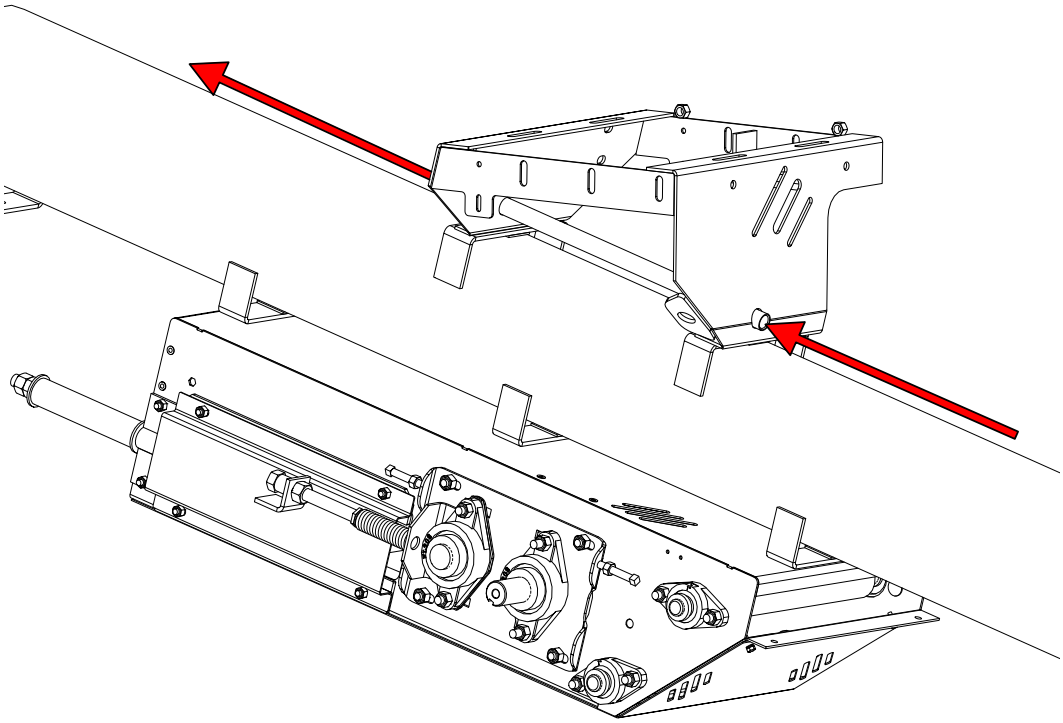

3.30. Align the Winch

This procedure describes the alignment of the winch.

1. Check the alignment of the winch by watching the cable wrapping on the drum as the conveyor is raised. Proper alignment is achieved when the cable indexes, filling each row on the drum evenly and not piling up against one side.
2. Lower the conveyor fully if the cable does not index properly until there is slack in the cable.
3. Loosen the bolts holding the winch, adjust the winch, re-tighten bolts and retest.

3.31. Install the Over-Mount Gas/Electric Drive

This procedure describes the installation of the over-mount gas drive or electric drive.

➡ See Table 27 for a list of procedures required to install the gas drive.

➡ See Table 28 for a list of procedures required to install electric drive.

Table 27. Gas Drive Installation Procedures

Item	Procedures
1	Section 3.31.1 – Install the Motor Mount on page 74
2	Section 3.31.2 – Install the Gearbox on page 74
3	Section 3.31.3 – Install the Slider Mount on page 76
4	Section 3.31.4 – Install the Motor and Back Plates on page 77
5	Section 3.31.5 – Install the Rocker Arm on page 80
6	Section 3.31.6 – Electric Drive — Install the Overcenter Handle on page 81
7	Section 3.31.7 – Install the Pulleys and Belts, and if equipped, the Soft Start Electric Clutch on page 83
8	Section 3.31.8 – Install the Pulley Guards on page 87
9	Section 3.31.9 – Gas Drive — Battery Kit on page 89
10	Section 3.33 – Gas Drive — Control Box on page 109
11	Section 3.34.1 – Gas Drive — EPA Tank Kit (for USA only) on page 112 or Section 3.34.2 – Gas Drive — Tank Kit (for outside USA) on page 115
12	Section 3.34.3 – Gas Drive — Install Primer Bulb on page 117

Table 28. Electric Drive Installation Procedures

Item	Procedures
1	Section 3.31.1 – Install the Motor Mount on page 74
2	Section 3.31.2 – Install the Gearbox on page 74
3	Section 3.31.3 – Install the Slider Mount on page 76
4	Section 3.31.4 – Install the Motor and Back Plates on page 77
5	Section 3.31.5 – Install the Rocker Arm on page 80
6	Section 3.31.6 – Electric Drive — Install the Overcenter Handle on page 81
7	Section 3.31.7 – Install the Pulleys and Belts, and if equipped, the Soft Start Electric Clutch on page 83
8	Section 3.31.8 – Install the Pulley Guards on page 87

3.31.1 Install the Motor Mount

1. Attach the motor mount (1) to the conveyor tube brackets using with 7/16" x 1" bolts (2) and 7/16" locknuts (3) (see Figure 59).

   Note

   Orient the motor mount precisely as shown in Figure 59.

Table 29. Drive Mount Components

Item	Description
1	Motor Mount
2	7/16" x 1" Bolt Gr8 Plated
3	7/16" Nylon Locknut Gr8

Figure 59. Motor Mount

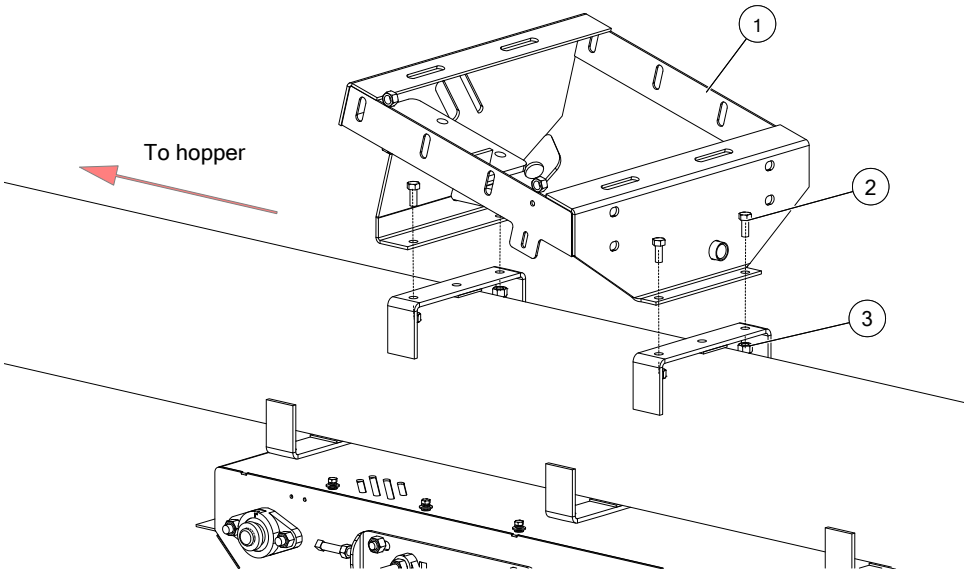

3.31.2 Install the Gearbox

1. Check the oil level in the gearbox. It should be 1/2 full.
2. Attach the gearbox (1) to the motor mount using 1/2" x 1-1/4" bolts (2) and 1/2" lock washers (3) (see Figure 60).

   Note

   Do not tighten the gearbox bolts.

3. Connect the gearbox breather (fitting, hose, vent) (4) to the gearbox breather hole (see Figure 61).

Table 30. Gearbox Components

Item	Description
1	Gearbox 90 1:1 CW/CW 1–1/2 4190 w/Oil (For Electric Drive)
	Gearbox 4190 2:1 1–1/2 Shaft (For Gas Drive)
2	1/2" x 1-1/4" Bolt Gr5 Plated
3	1/2" Lock Washer Plated
4	Breather Direct Drive

Figure 60. Installing the Gearbox

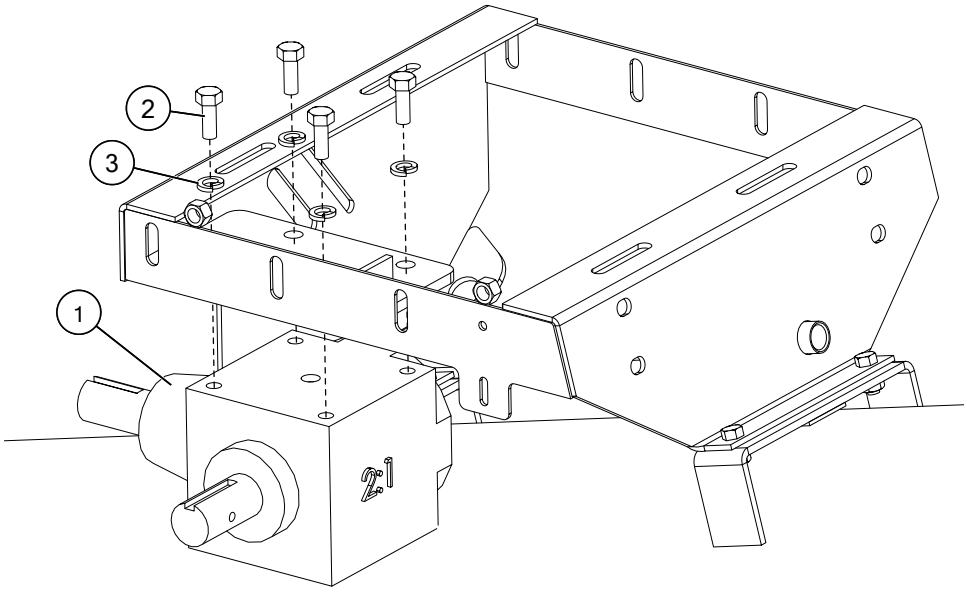

Figure 61. Gearbox Breather

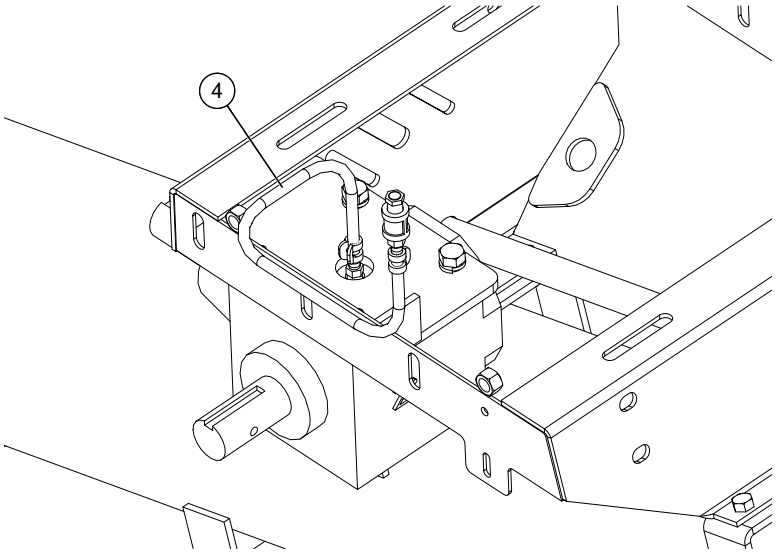

3.31.3 Install the Slider Mount

1. Install the slider mount (4) onto the motor mount using 7/16" x 1–1/2" bolts (5), 7/16" flat washers (8), and 7/16" locknuts (3).

   Note

   Orient the slider mount exactly with the 5/16" x 3/4" bolts (7) on the side they are shown on in Figure 62. Leave the 5/16" bolts loose until the motor/engine is mounted. Push the slider mount up against the welded nuts on the motor mount.

Table 31. Slider Mount Components

Item	Description
3	7/16" Nylon Locknut Gr8
4	Slider Mount
5	7/16" x 1–1/2" Bolt Gr8 Plated
6	1/2" x 2–1/2" Tap Bolt Gr8 Plated
7	5/16" x 3/4" Bolt
8	7/16" Flat Washer

Figure 62. Slider Mount

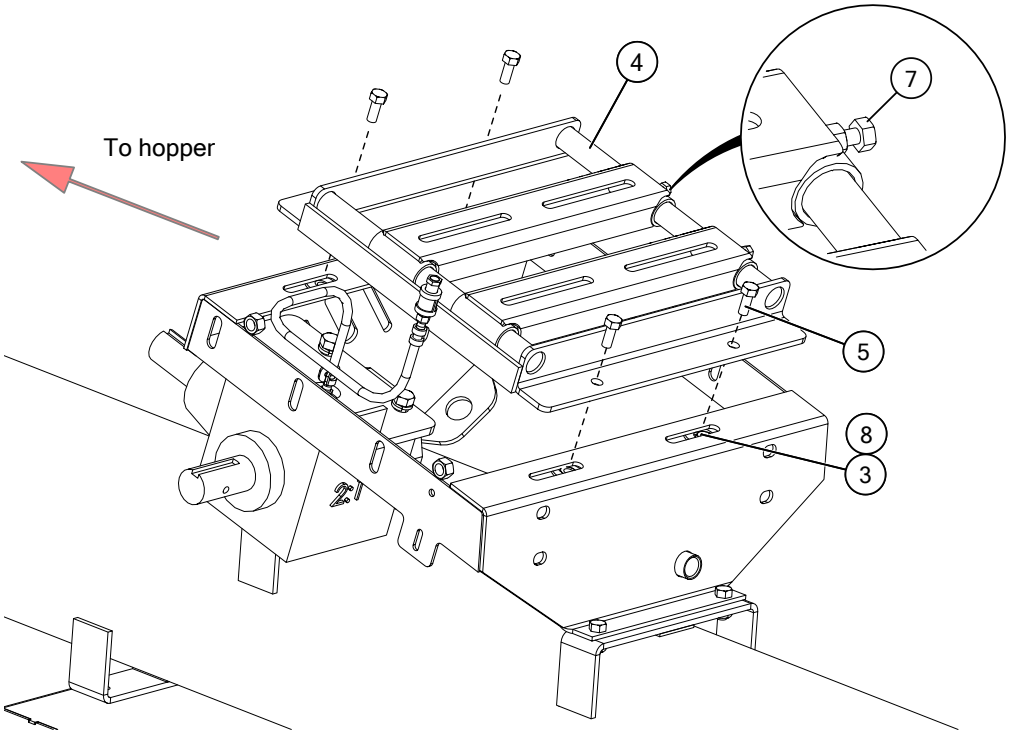

2. Feed the gearbox breather hose and vent through the slider mount (see Figure 63).
3. Insert the 1/2" x 2-1/2" tap bolts (6) to the motor mount.

Figure 63. Motor Mount Tap Bolts

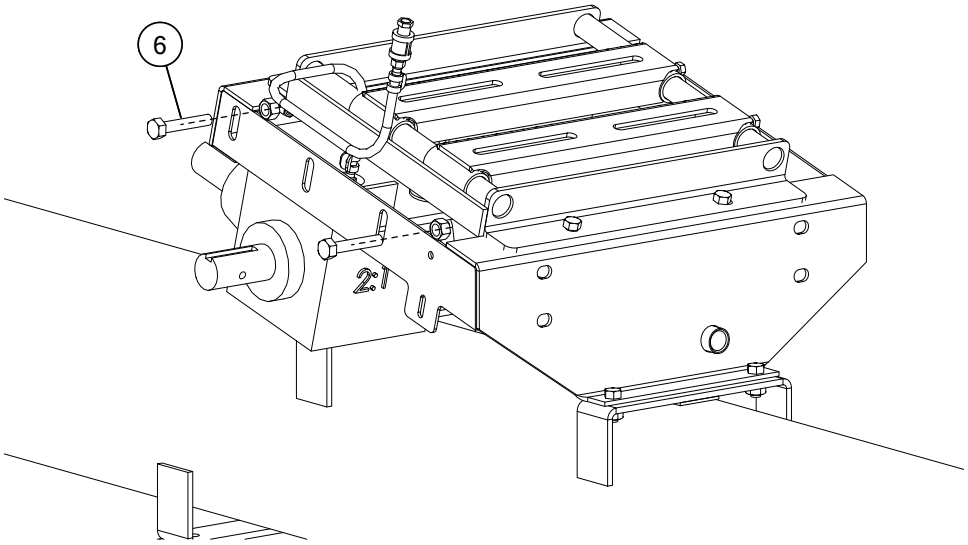

3.31.4 Install the Motor and Back Plates

1. Install the gas engine or electric motor (1) on the slider mount. At the same time, secure the ground wires for the battery, and clutch (if equipped), to the motor mount bolt (location indicated by the red arrow) using a flat washer (see Figure 64).

   Important

   Installation and wiring for the gas engine or the electric motor are to be done by a certified technician and should be based on OEM (original equipment manufacturer) specifications. Some hardware has been included in the drive kit. Not all installations will require all parts. After the conveyor is completely assembled, place finishing zip-ties on all cables and wiring to ensure all lines are snug in place.

   Note

   For Kohler engines, for the approximate correct position of the engine on the slider mount, measure 2–3/4" from the engine base to the outer edge of the slider mount pipe. Also measure approximately 7/8" from the slider bar closest to the hopper to the edge of the slider mount closest to the hopper. Then snugly install the motor mount bolts (but do not tighten).

2. **For a gas engine:**

   a. Secure the engine drain hose on the engine base (not shown).

   b. Install the choke and throttle cables to the engine and route them to the control box.

   c. Fasten the top end of the muffler support bracket onto the muffler shield and muffler (not shown).

   d. Install the engine exhaust pipes onto the engine (not shown). Install the muffler and muffler shield onto the engine exhaust pipes. Install the rain cap on the muffler.

   e. Fasten the bottom end of the muffler support bracket to the top of the base of the engine block with a motor mount bolt.

   f. Fill engine with oil up to the dipstick line (see Table 32).

Table 32. Oil Quantity Required

Engine	Approximate Oil Quantity Required
Kohler	2 L
Vanguard	2 L

3. Attach the engine back guard (2) to the motor mount using 7/16" x 1" bolts (3) and 7/16" locknuts (4) (see Figure 64).
4. Attach the top end of motor mount side plate (5) to the motor mount using 7/16" x 1" bolts (3), 7/16" flat washers (10), and 7/16" locknuts (4) (see Figure 65).
5. Secure the bottom end of the motor mount side plate to the s-drive guard using 1/4" x 3/4" bolts (6), 1/4" lock washers (8), 1/4" flat washers (9), and 1/4" threaded inserts (7).

Table 33. Motor and Guard Components

Item	Description
1	Electric Motor or Gas Engine (not included)
2	Engine Back Guard
3	7/16" x 1" Bolt Gr8 Plated
4	7/16" Nylon Locknut
5	Motor Mount Side Plate
6	1/4" x 3/4" Bolt UNC
7	1/4" Threaded Insert
8	1/4" Lock Washer Plated
9	1/4" Flat Washer Plated USS
10	7/16" Flat Washer Plated USS

Figure 64. Installing the Engine/Motor Back Guard

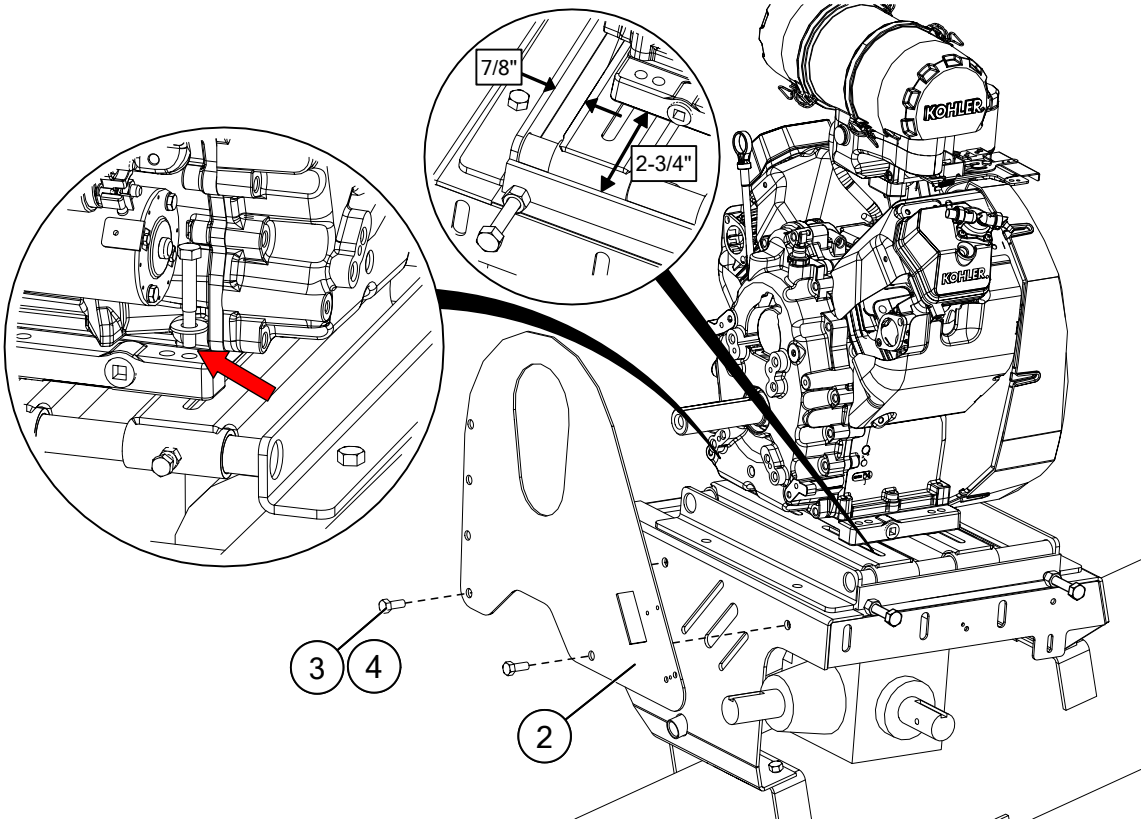

Figure 65. Installing the Motor Mount Side Plate

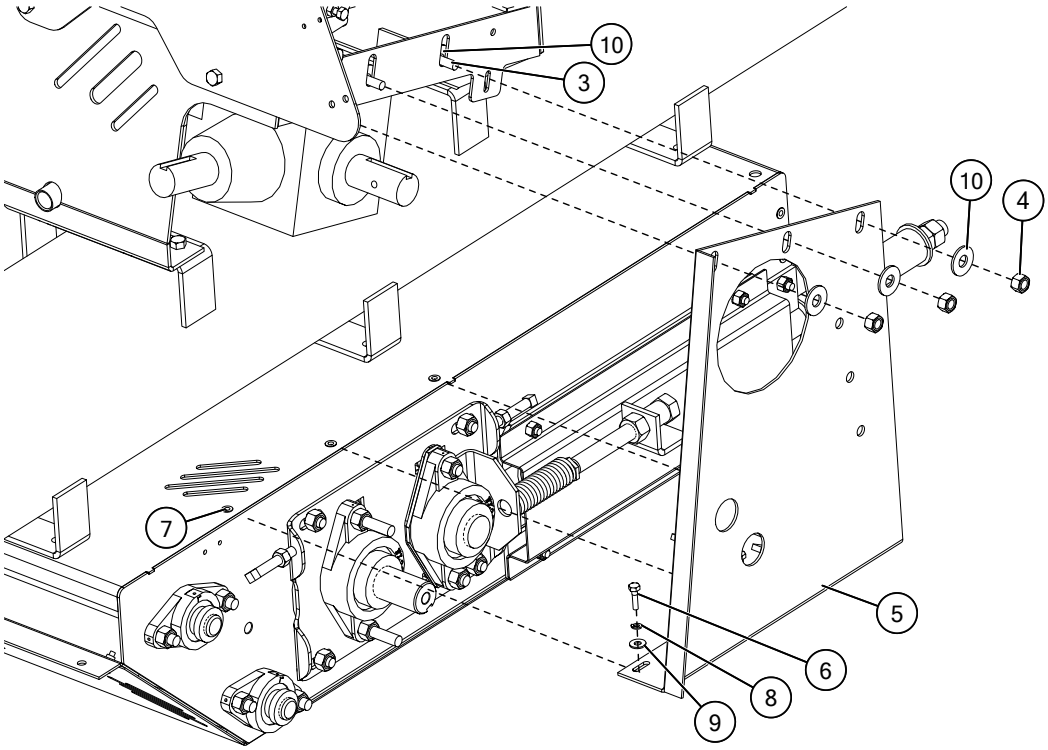

3.31.5 Install the Rocker Arm

1. Insert the rocker arm pivot shaft (1) into the motor mount back plate (see Figure 66).
2. Attach the rocker arm sleeve (2) and a 1" flat washer (16) with a 3/8" x 2" bolt (3) and 3/8" locknut (4).

Table 34. Rocker Arm Components

Item	Description
1	Rocker Arm Pivot Shaft
2	Rocker Arm Sleeve
3	3/8" x 2" Bolt Gr8 Plated
4	3/8" Nylon Locknut
16	1" Flat Washer
17	1/2" x 5" Tap Bolt
18	1/2" Hex Nut

Figure 66. Installing the Rocker Arm Pivot Shaft

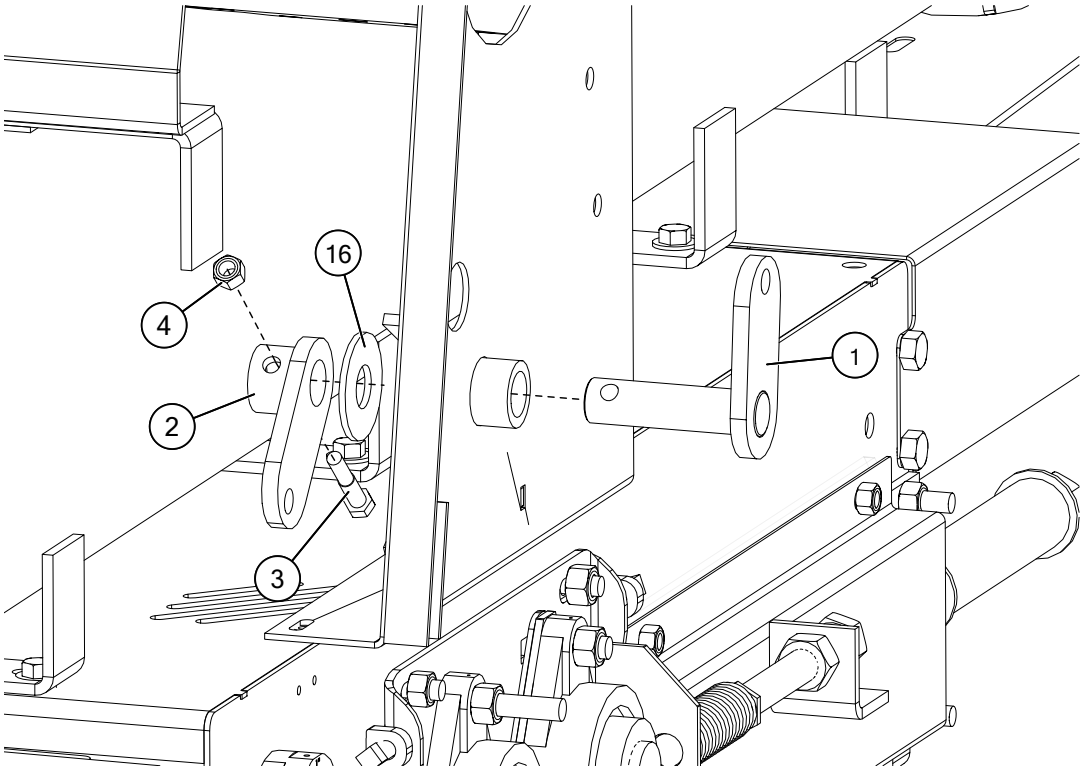

Important

If your conveyor has a gas engine drive installed on it, you must also install a soft start electric clutch. If your conveyor has an electric motor installed on it, this drive will not have a soft start electric clutch installed on it.

3. **For models with a gas engine and soft start electric clutch:** Fasten a 1/2" x 5" tap bolt (17) and a 1/2" hex nut (18) through the tab on the back of the motor mount side plate (see Figure 67).

Figure 67. Tap Bolt

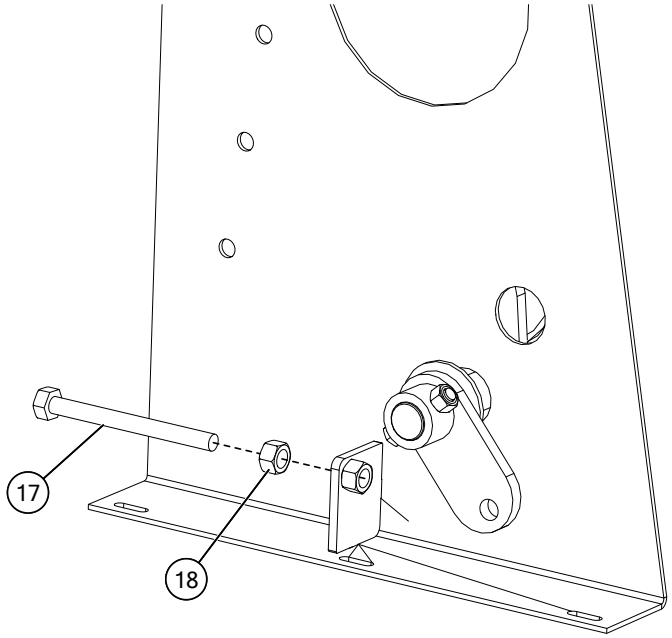

Note

After installing the belt, use the tap bolt (17) to adjust the belt tension.

3.31.6 Electric Drive — Install the Overcenter Handle

1. Attach the push rod (5) to the rocker arm sleeve with a bolt (6) and 1/2" locknut (7) (see Figure 68).

   Note

   Rotate the rocker arm pivot shaft to facilitate installation of the bolt through the available hole.

2. Thread the adjuster (8) into the push rod (5).

Table 35. Push Rod Components

Item	Description
5	Motor MT Over-Center Push Rod
6	1/2" x 2" Hex Bolt
7	1/2" Nylon Locknut
8	Over-Center Adjuster

Figure 68. Installing the Push Rod

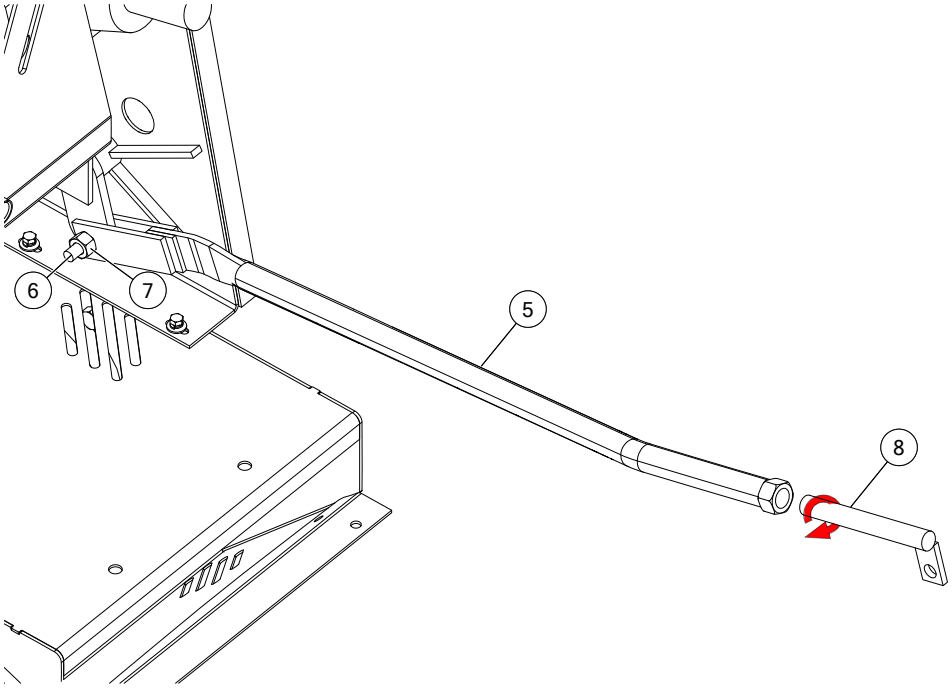

3. Attach the anchor bracket (9) and 10" x 2-1/2" u-clamp (10) to the tube with 7/16" x 1-1/2" bolts (11) and 7/16" locknuts (12) (see Figure 69).
4. Tighten the u-clamp until the tube begins to crimp.
5. Bolt the handle (13) to anchor bracket (9) with a 1/2" x 2-1/2" bolt (14) and 1/2" locknut (7).
6. Connect the adjuster to the handle with a 3/16" x 1-1/2" cotter pin (15).

Table 36. Overcenter Handle Components

Item	Description
9	Motor MT Over-Center Anchor Bracket
10	10" x 2-1/2" U-clamp
11	7/16" x 1-1/2" Hex Bolt
12	7/16" Nylon Locknut
13	Motor MT Over-Center Handle
14	1/2" x 2-1/2" Hex Bolt
15	3/16" x 1-1/2" Cotter Pin

Figure 69. Installing the Overcenter Handle

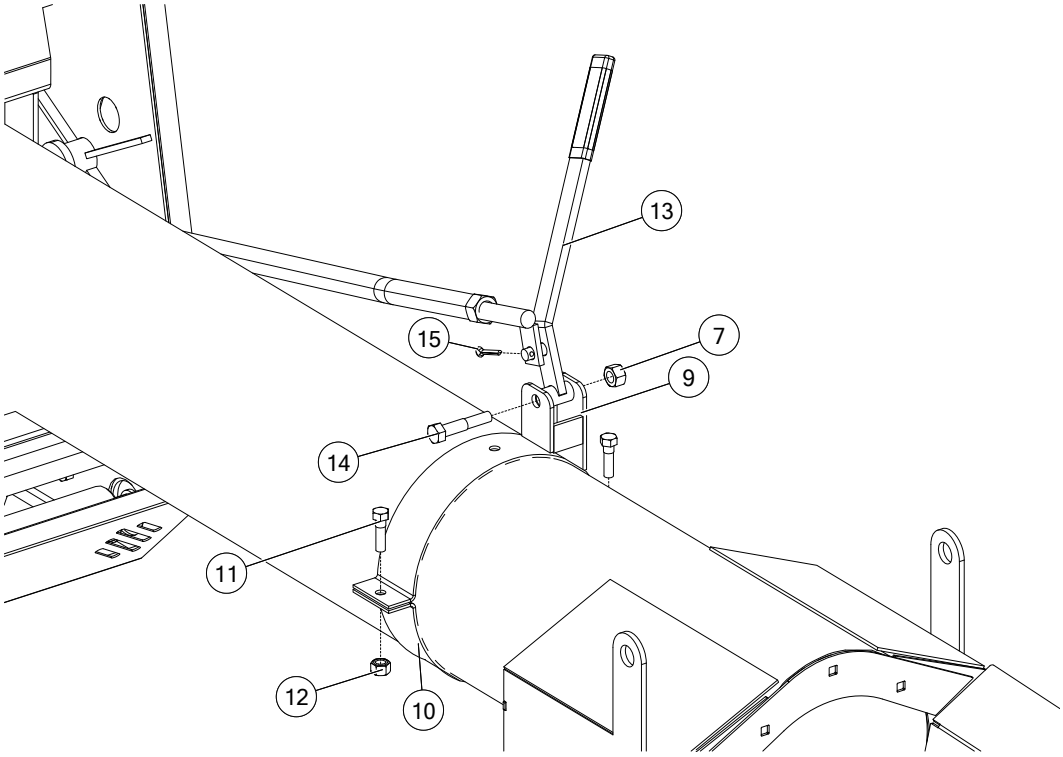

3.31.7 Install the Pulleys and Belts, and if equipped, the Soft Start Electric Clutch

1. Install the idler pulley (1) onto the rocker arm pivot shaft using a 1/2" bolt (2), 1/2" flat washers (3), two bushings (12), and a 1/2" locknut (4) (see Figure 70). The side of the idler pulley with an inset hub faces away from the engine/motor.
2. Apply grease to the idler pulley.
3. Install the pulleys (5, 6) and keys (9) onto the gearbox and s-drive shaft, with the “noses” of the pulleys facing inward toward the gearbox and s-drive. Do not tighten pulley set screws until pulleys are aligned.
4. Align the pulleys with a straightedge.
5. **For models with mover kit:** see Section 3.35 – Hydraulic Wet Kit on page 120 to install the hydraulic pump pulleys and belt.
6. **For models without mover kit:** insert a 1/4" x 3–1/4" square key (not shown) onto the gas engine or electric motor shaft for the double pulley.

   Important

   If your conveyor has a gas engine drive installed on it, you must also install a soft start electric clutch. If your conveyor has an electric motor installed on it, this drive will not have a soft start electric clutch installed on it.

7. **For models with a gas engine and soft start electric clutch:**
   a. Install the clutch stop bracket (15) onto the engine using one 3/8" x 1" bolt (16) with 1/2" lock washer (17) (see Figure 71).

b. Slide the soft start electric clutch (with factory pre-assembled double pulley) (18) onto the engine shaft and clutch stop bracket (15). Tighten the clutch using a 7/16" x 3" fine-thread bolt (19) and 7/16" lock washer (22).

c. Attach the electric clutch module (20) to the back of the motor guard plate using tek screws (21) (see Figure 72).

d. Install the wiring for the soft start electric clutch (see Figure 73). Secure the ground wire to the motor mount bolt.

8. **For models with an electric motor:** Install the pulley (7) and bushing (14) onto the motor shaft (see Figure 71). Do not tighten bushing bolts until pulleys are aligned.

Note

If an electric motor drive model has a mover kit, the double pulley (7) and the hydraulic drive pulley that are installed on the motor shaft may be together replaced by a triple pulley.

9. Install the 12" pulley (8) and key (9) onto the gearbox (with the pulley “nose” facing inward toward the gearbox). Do not tighten pulley set screws until pulleys are aligned.

10. Align the pulleys with a straightedge.

11. Install the belts (10, 11).

12. Tighten gearbox bolts, motor base bolts, slider mount bolts, motor mount tap bolts, and tighten the pulley set screws.

Important

Once all bolts and set screws are tightened, re-check alignment. Proper alignment will prolong belt life.

13. **For models with a gas engine:** set the belt tension on the s-drive and gearbox using the adjustment tap bolt against the rocker arm sleeve.

14. **For models with an electric motor:** set the belt tension on the s-drive and gearbox using the threaded adjuster rod connected to the overcenter handle.

Note

Belts should deflect 1/2" (1.27 cm) to 3/4" (1.91 cm) when pushed on with a 5 lb (22.2 N) force.

Table 37. Pulleys, Belts, and Electric Clutch Components

Item	Description
1	Idler Flat 4" Triple 2-7/16" Wide
2	1/2" x 3" Hex Bolt (For Electric Drive)
	1/2" x 4" Hex Bolt (For Gas Drive)
3	1/2" Flat Washer
4	1/2" Nylon Locknut
5	Pulley Double 6" with 1-1/2" Bore
6	Pulley Double 10" with 1-1/2" Bore
7	Pulley Double BK 4" H
8	Pulley Double 12" with 1-1/2" Bore
9	3/8" x 2" Key

Table 37 Pulleys, Belts, and Electric Clutch Components (continued)

Item	Description
10	Belt 2B65 Banded
11	Belt B52 (quantity of 2) (For Electric Drive)
	Belt B54 (quantity of 2) (For Gas Drive)
12	Bushing 3/4" OD x 1/2" ID x 1" Bronze
14	Bushing for Pulley
15	Clutch Stop Bracket
16	3/8" x 1" Hex Bolt Gr8
17	1/2" Lock Washer Plated
18	Soft Start Electric Clutch (with factory pre-assembled double pulley)
19	7/16" x 3" Hex Bolt Gr8 Fine
20	Electric Clutch Module
21	#10-16 UN X 3/4" Tek Screw
22	7/16" Lock Washer

Figure 70. Installing the Pulleys and Belts to the S-drive and Gearbox

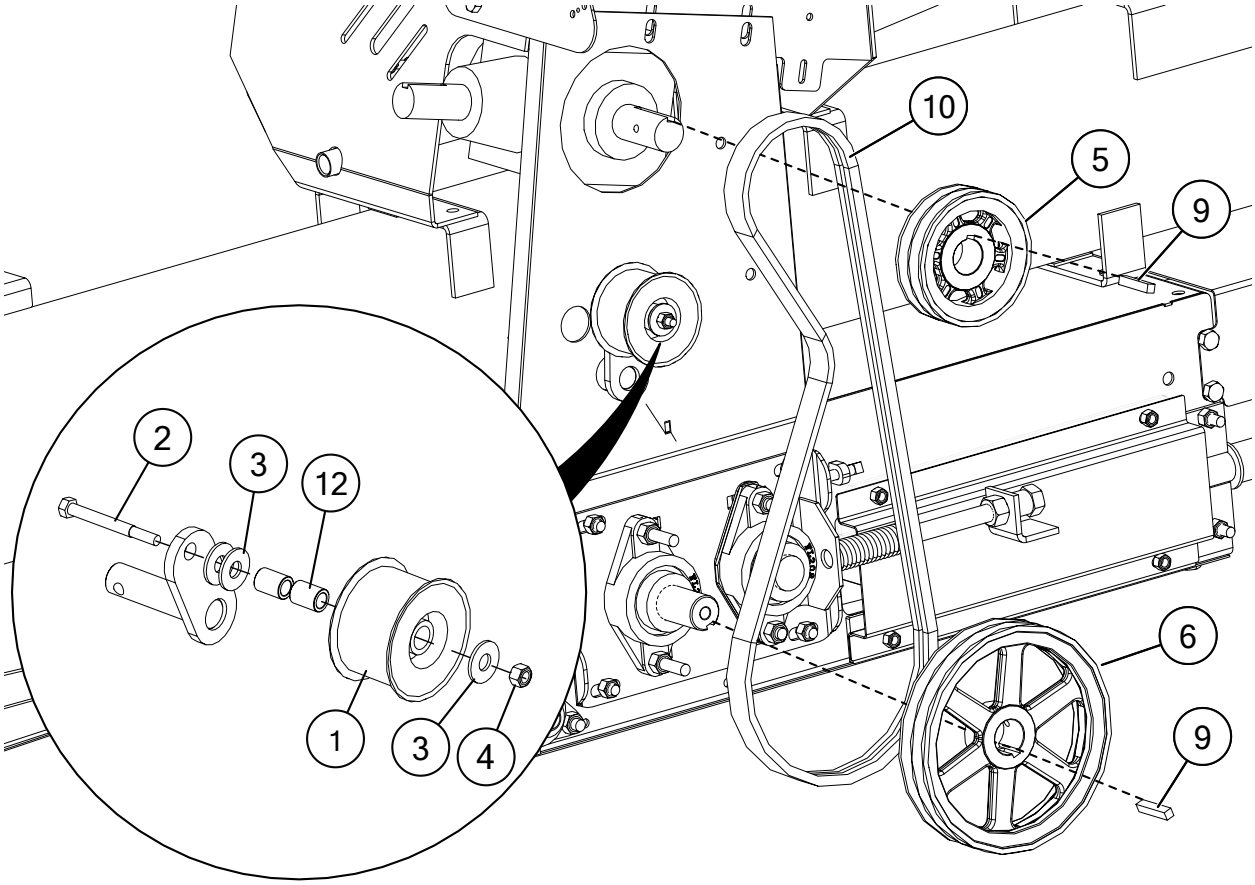

Figure 71. Installing the Pulleys and Belts to the Motor Shaft and Gearbox (and Electric Clutch, if equipped)

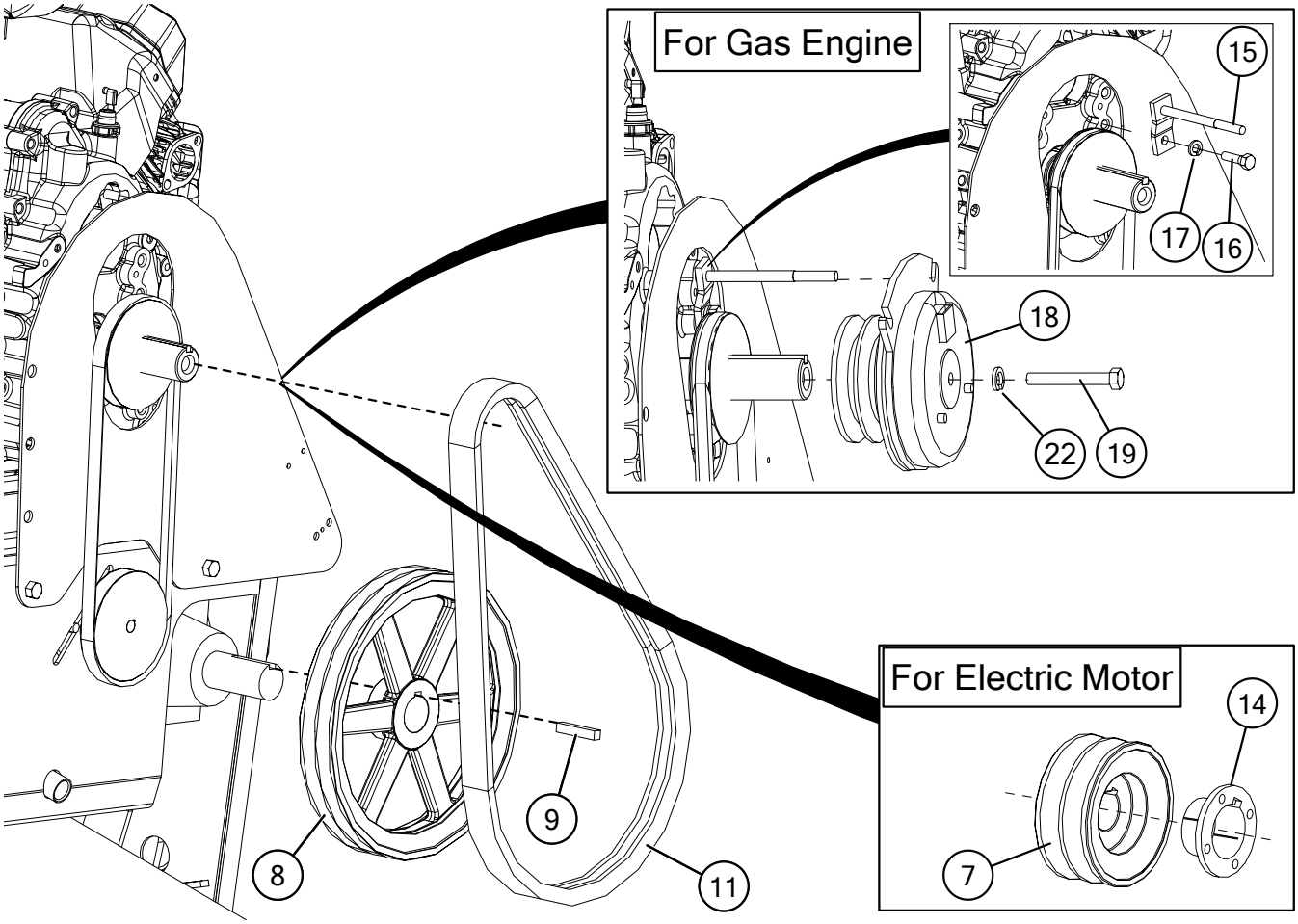

Figure 72. Installing the Electric Clutch Module

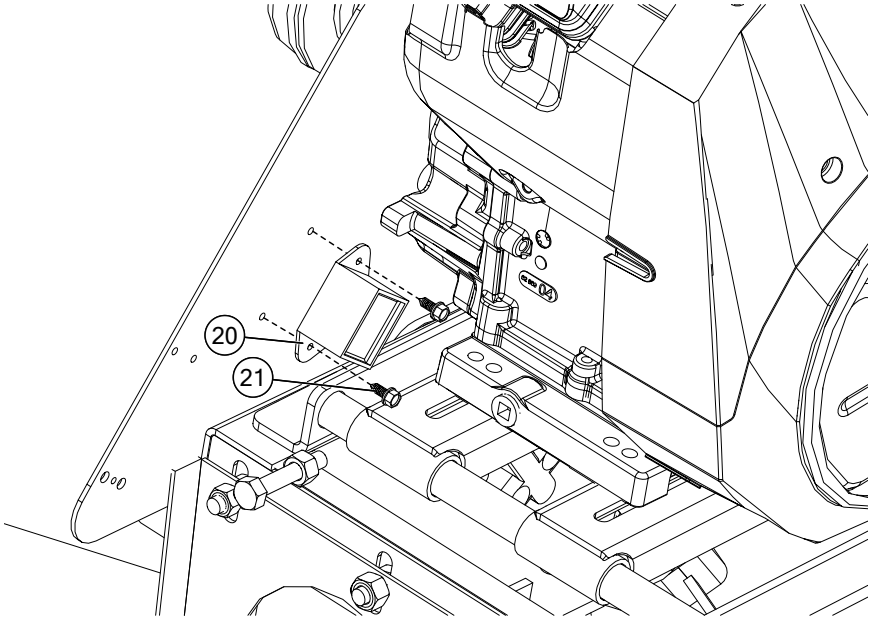

Figure 73. Soft Start Electric Clutch Wiring

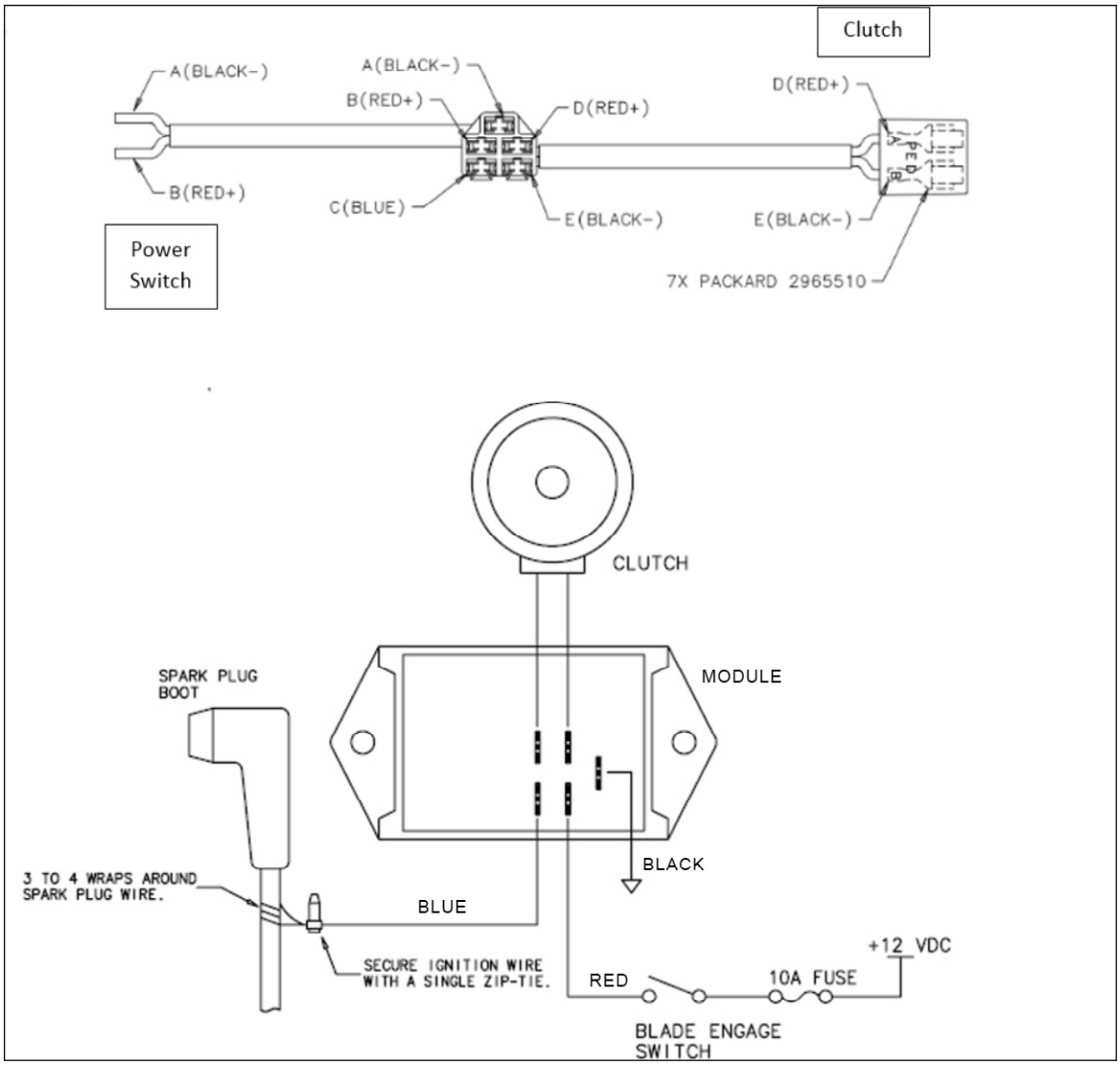

3.31.8 Install the Pulley Guards

1. Attach the safety decals on and under the pulley guards (1, 2) (see Figure 74 and Figure 75). See decal location diagram in Safety chapter.
2. For each pulley guard, hold the guard over the belt and attach the hinge to the back plate using 7/16" x 1" bolts (3) and 7/16" locknuts (4).
3. Attach the latch (5) to the s-drive side plate using 3/16" x 1/2" rivets (6).
4. Attach the latch (5) to the motor guard using 3/16" x 1/2" rivets (6).
5. Install the shaft guard (see Section 3.36 – Install the Shaft Guard on page 127).

Table 38. Pulley Guard Components

Item	Description
1	Pinch Guard — Small Assembled
2	Pinch Guard — Medium Assembled
3	7/16" x 1" Hex Bolt Gr8 Plated
4	7/16" Nylon Locknut
5	Latch
6	3/16" x 1/2" Rivet Steel Body

Figure 74. Installing the Pulley Guard on the S-drive and Gearbox

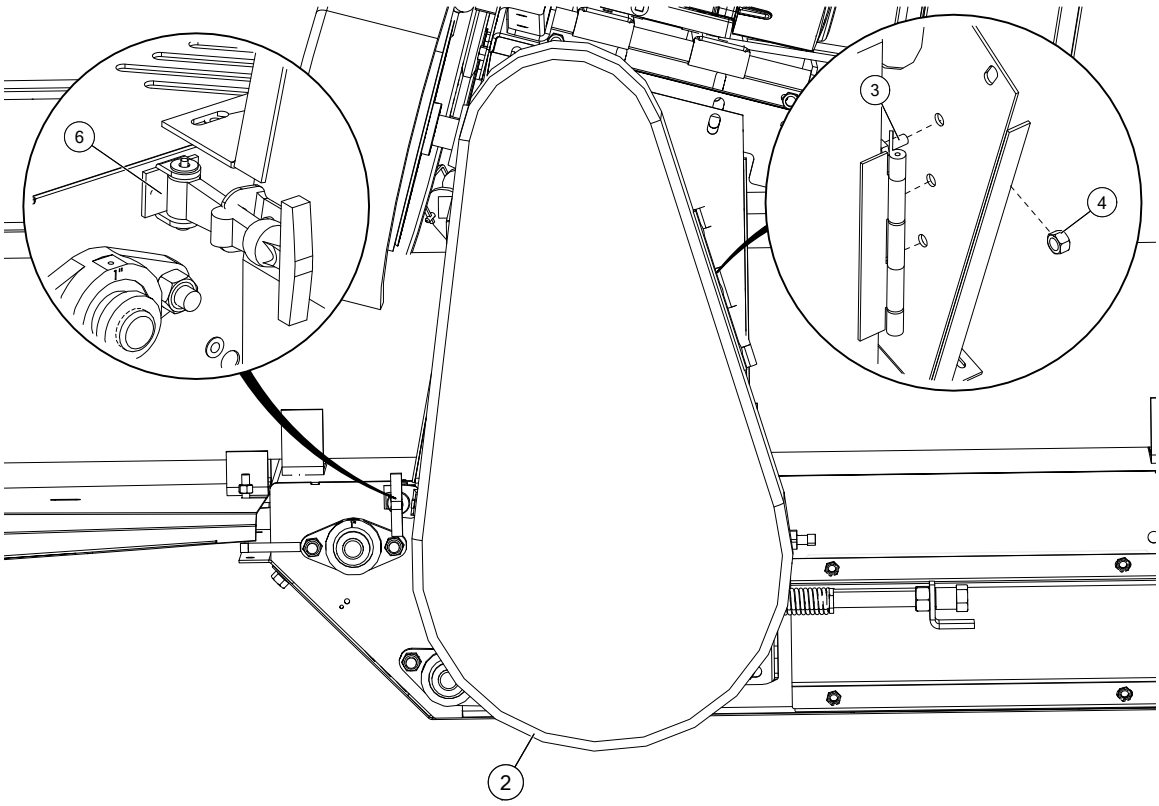

Figure 75. Installing the Pulley Guard on the Engine and Gearbox

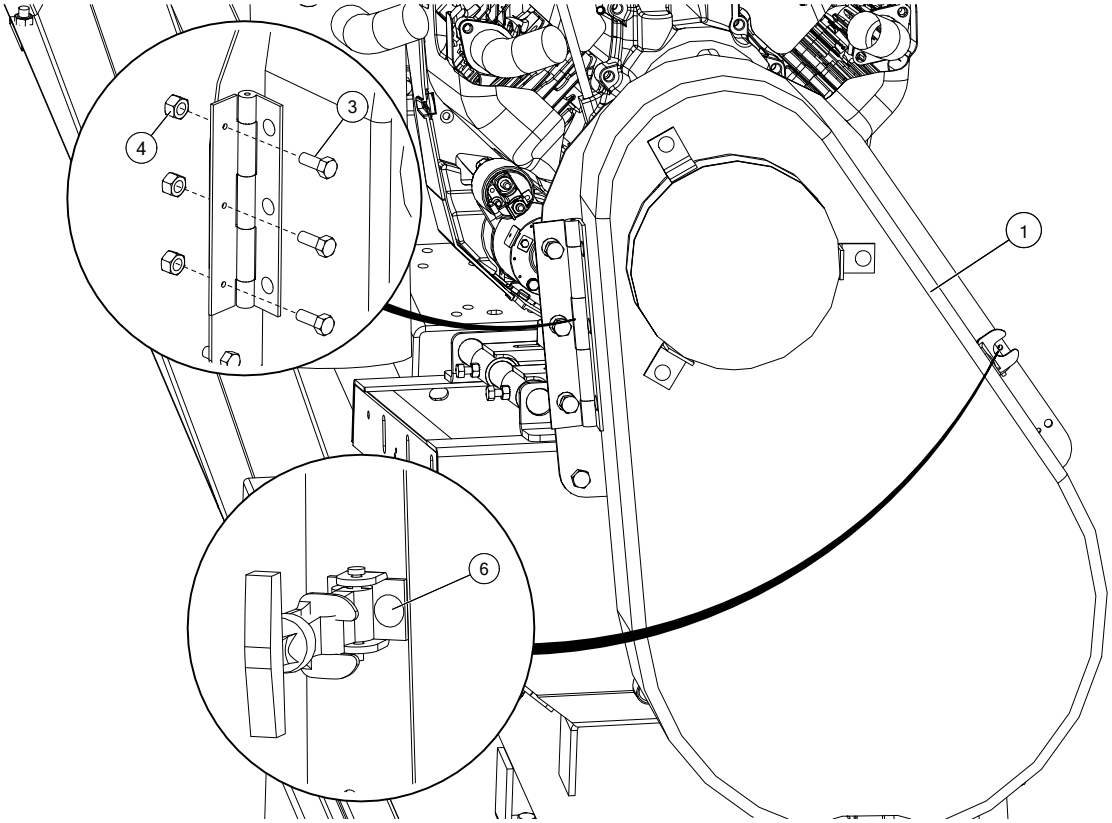

Note

Pulley guard shown is for drive with electric clutch.

3.31.9 Gas Drive — Battery Kit

1. Attach the battery mount (2) to the engine mount with 7/16" x 1" bolts (3), 7/16" flat washers (8), and 7/16" locknuts (1) (see Figure 76).
2. Set the battery (6) in place.
3. Secure the battery with clamp (5) and 3/8" locknuts (7).
4. Connect the battery cables (4) to the engine as follows:
   a. The ground cable is fastened to a motor mount bolt.
   b. The positive cable is connected to the starter.

Table 39. Battery Components

Item	Description	Quantity
1	7/16" Locknut	4
2	Battery Mount	1
3	7/16" x 1" Bolt	4
4	37" Battery Cable (94 cm)	2
5	Battery Clamp	1

Table 39 Battery Components (continued)

Item	Description	Quantity
6	Battery — 12V, min. 420 CCA	1
7	3/8" Locknut	2
8	7/16" Flat Washer	4

Figure 76. Installing the Battery

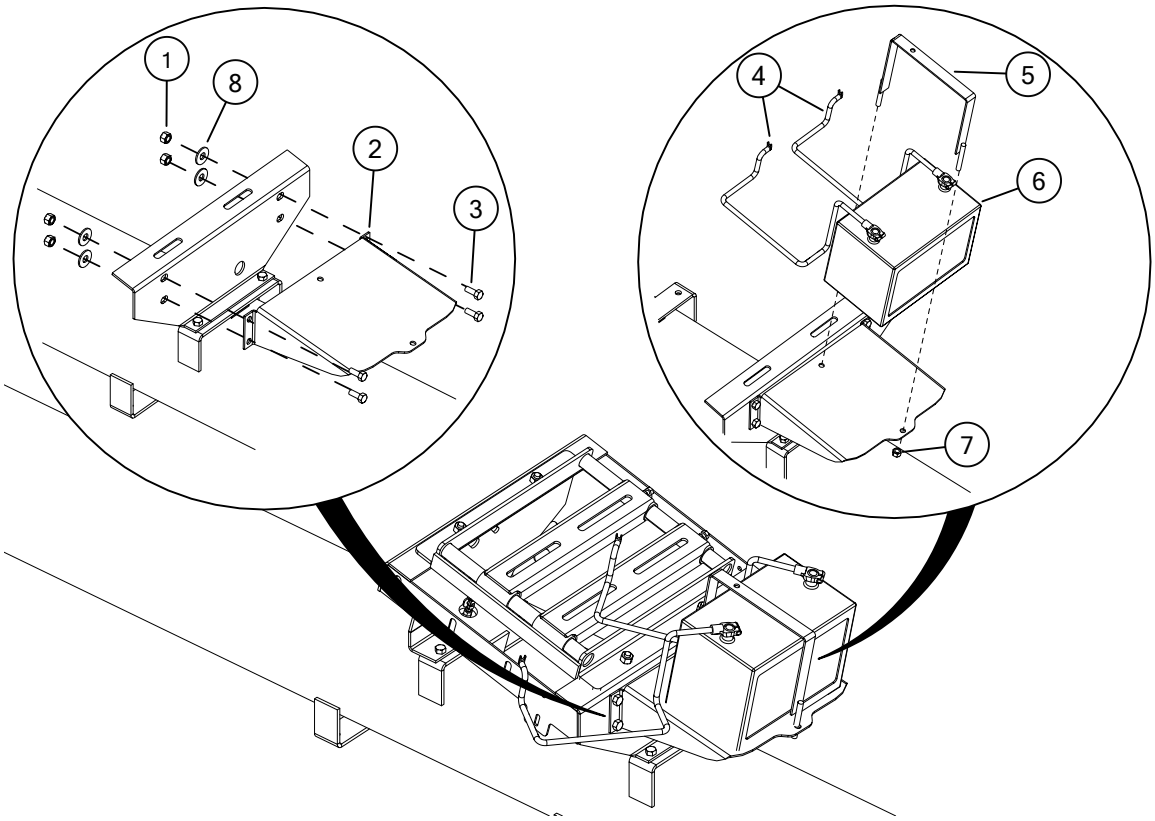

3.32. Install the Under-Mount Gas Drive (Option for FX1545FL Only)

3.32.1 Install the Drive Mount and Platform

1. Install the crossbar mount (1) to the conveyor tube using 7/16" x 1" bolts (2) and 7/16" locknuts (3) (see Figure 77).

   Note

   Orient the crossbar mount precisely as indicated in Figure 78.

2. Install the hopper-side mount arms (4, 7) onto the crossbar mount using 3/8" x 1-1/4" bolts (5) and 3/8" locknuts (6).

   Note

   In this section, the left and right sides are defined by viewing from the conveyor's hopper toward the spout.

   Note

   Do not tighten the mount arm bolts. They will be squared and tightened later.

3. Install the spout-side mount arms (11, 12) onto the crossbar mount using 3/8" x 1-1/4" bolts (5) and 3/8" locknuts (6).
4. Install the engine platform (8) onto the bottom of the mount arms using 3/8" x 1" bolts (9) and 3/8" locknuts (10).

Table 40. Crossbar Mount, Mount Arms, and Engine Platform

Item	Description	Quantity
1	Crossbar Mount	1
2	7/16" x 1" Flange Bolt	4
3	7/16" Flange Locknut	4
4	Hopper-side Left Mount Arm	1
5	3/8" x 1-1/4" Flange Bolt	6
6	3/8" Flange Locknut	6
7	Hopper-side Right Mount Arm	1
8	Engine Platform	1
9	3/8" x 1" Flange Bolts	12
10	3/8" Flange Locknut	12
11	Spout-side Left Mount Arm	1
12	Spout-side Right Mount Arm	1

Figure 77. Crossbar Mount, Mount Arms, and Engine Platform

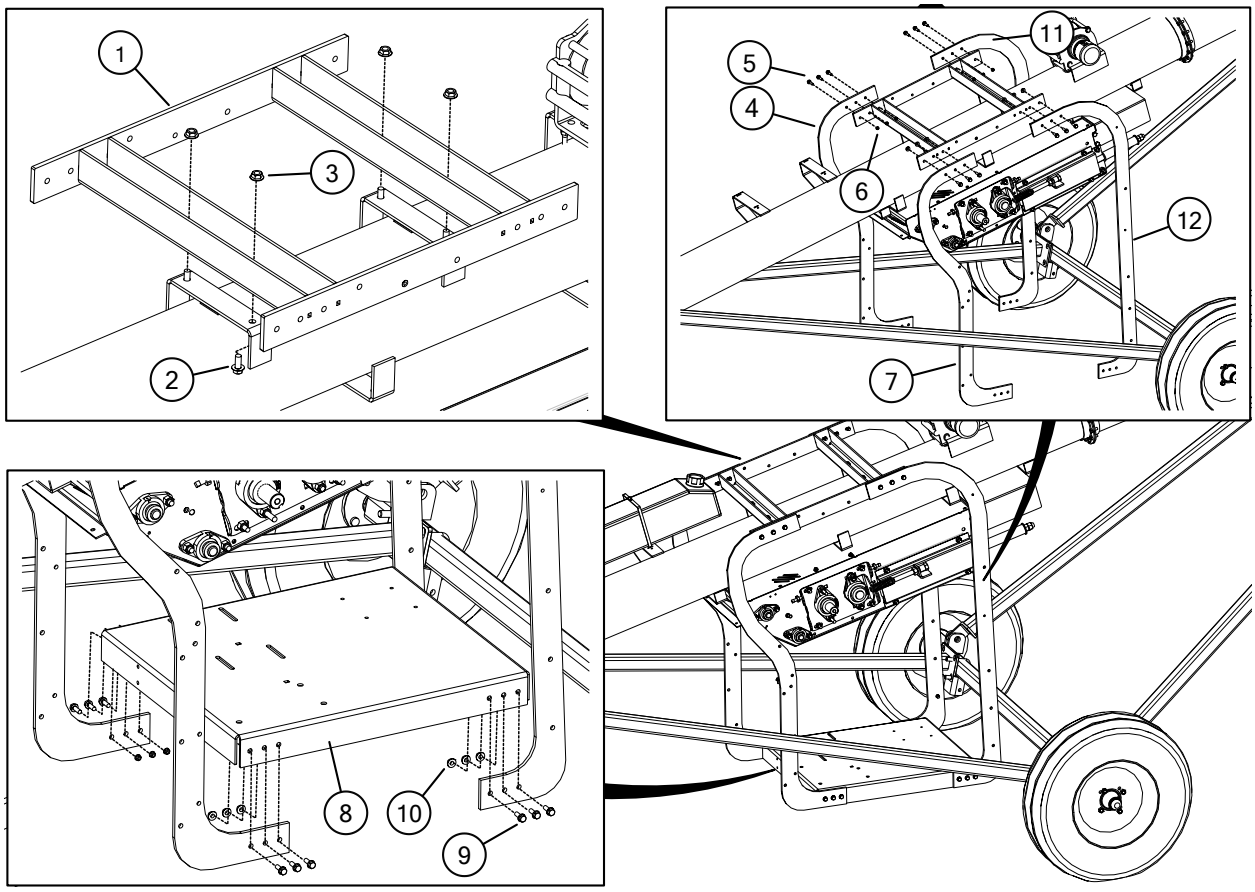

Figure 78. Orientation of the crossbar mount on the tube

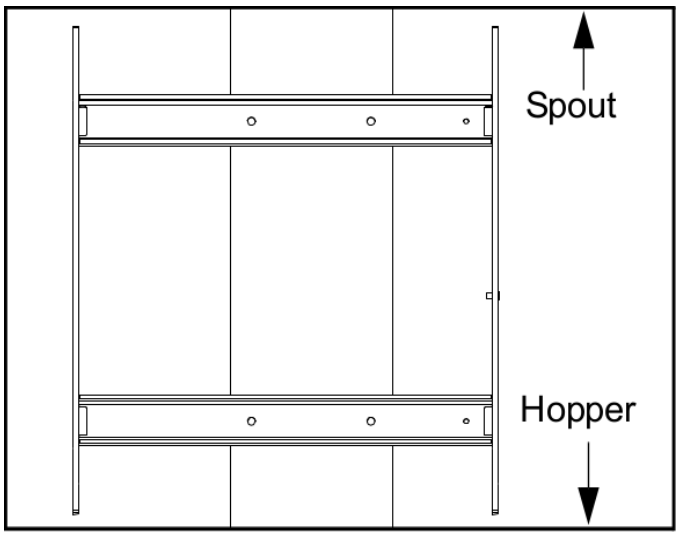

3.32.2 Install the Frame Stabilizers

1. Remove the 1/2" nylock nut (8) on the end of the s-drive (nearest the hopper) as shown in Figure 79 and replace the existing s-drive bolt at this location with the supplied 1/2" x 1-3/4" bolt (4).

2. Install the hopper-side frame stabilizer (7) using a 3/8" x 1-1/4" bolt (1) and 3/8" locknut (3) onto the hopper-side right mount arm, and using the 1/2" x 1-3/4" bolt (4) and the 1/2" nylock nut (8) onto the s-drive.
3. Remove the 1/2" nylock nut (8) on the end of the s-drive (nearest the spout) and replace the existing s-drive bolt at this location with the supplied 3/8" x 1-1/2" bolt (5).
4. Install the spout-side frame stabilizer (2) using a 3/8" x 1-1/4" bolt (1) and 3/8" locknut (3) onto the spout-side right mount arm, and using the 3/8" x 1-1/2" bolt (5) and the 1/2" nylock nut (8) onto the s-drive.
5. Tighten the mount arm bolts.

Note

Use a clamp to keep the mount arms square and flush with the crossbar mount plates while tightening the bolts.

Table 41. Frame Stabilizers

Item	Description	Quantity
1	3/8" x 1-1/4" Flange Bolt	1
2	Spout-side Frame Stabilizer	1
3	3/8" Flange Locknut	2
4	1/2" x 1-3/4" Bolt	1
5	3/8" x 1-1/2" Bolt	1
7	Hopper-side Frame Stabilizer	1
8	1/2" Nylock Nut	1

Figure 79. Frame Stabilizers

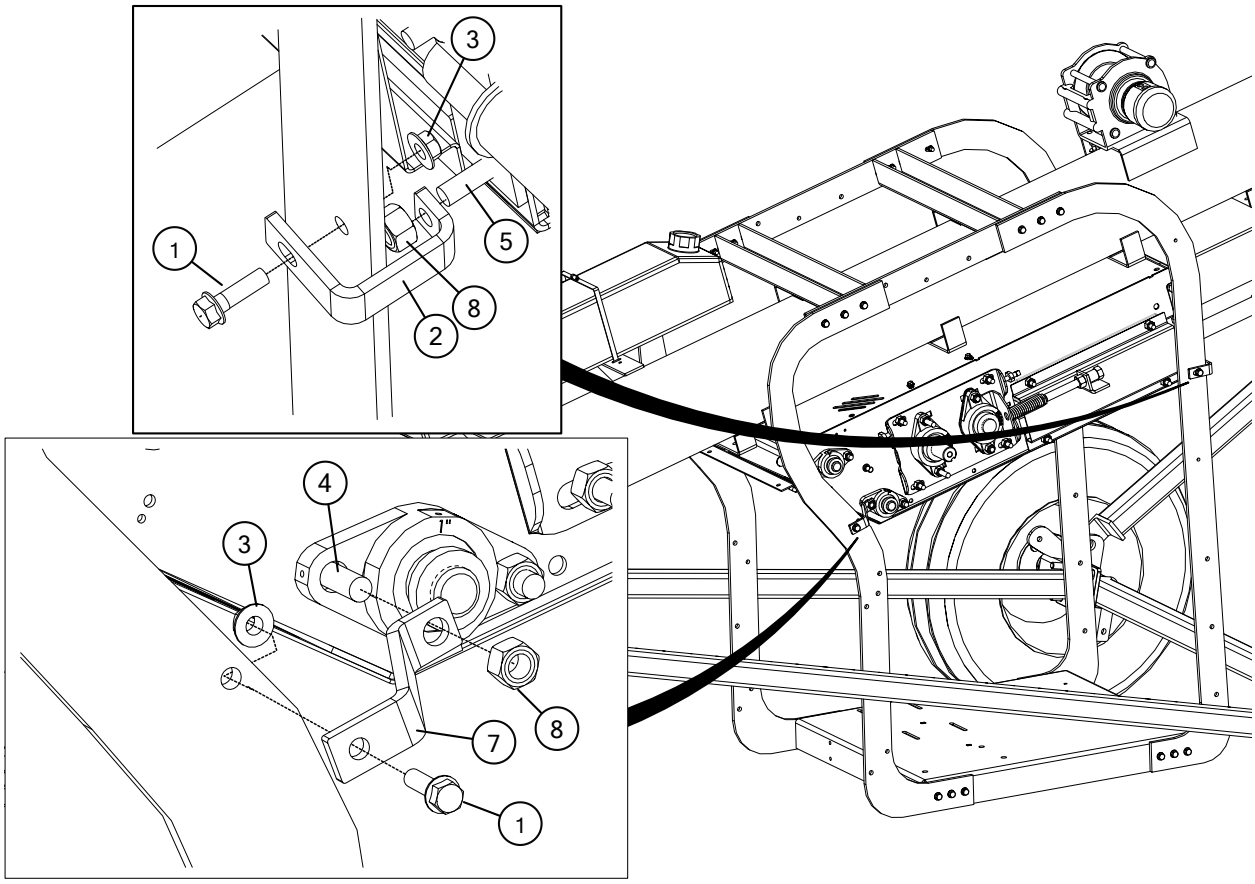

3.32.3 Install the Hydraulic Pump, Gearbox, and Belt Tightener

1. Assemble the hydraulic pump engagement handle (1) (see Figure 80) as follows:
   a. Attach the pivot handle (2) to the pivot shaft (3) using a 3/8" x 2-1/2" bolt (4), a 3/8" locknut (5), and six 3/8" washers (6).
   b. Attach the 1/4" x 2-1/4" quick pin (7).
2. Install the fittings (24, 25) on the hydraulic pump (see Figure 81).
3. Install the pump mount plate (8) and hydraulic pump (9) onto the gearbox mount (10) using 3/8" x 1-1/2" carriage bolts (11), and 3/8" locknuts (5).

   Note

   Make sure the orientation of the fittings and direction arrow on the pump are as shown as the pump is mounted.

4. Thread the end of the pivot shaft (3) into the nut of the pump mount plate (8).
5. Install the gearbox mount (10) onto the engine platform using four 1/2" x 1-1/2" hex bolts (12) and 1/2" locknuts (13).
6. Install the gearbox (14) on top of the gearbox mount (10) using four 1/2" x 1-1/2" hex bolts (12), 1/2" lock washers (15), and 1/2" flat washers (16) (see Figure 82).

   Note

   Do not tighten the gearbox bolts at this time.

7. Install the belt tightener swivel mount (17) on top of the gearbox using four 1/2" x 1-1/2" hex bolts (12), 1/2" lock washers (15), and 1/2" flat washers (16).
8. Insert the rocker arm pivot shaft (18) into the pipe of the swivel mount (17).
9. Attach the rocker arm sleeve (19) with a 3/8" x 2" bolt (20) and 3/8" locknut (5).
10. Insert the 1/2" x 4" adjustment tap bolt (21) and 1/2" hex nut (22) in the swivel mount (17).
11. Install the gearbox oil filler extension / breather (23).

Table 42. Hydraulic Pump, Gearbox, and Belt Tightener Components

Item	Description
1	Hydraulic Pump Engagement Handle
2	Pivot Handle
3	Pivot Shaft
4	3/8" x 2-1/2" Hex Bolt GR8
5	3/8" Nylon Locknut
6	3/8" Flat Washer
7	1/4" x 2-1/4" Quick Pin
8	Pump Mount Plate
9	Hydraulic Pump
10	Gearbox Mount
11	3/8" x 1-1/2" Carriage Bolts
12	1/2" x 1-1/2" Hex Bolt
13	1/2" Nylon Locknut
14	Gearbox
15	1/2" Lock Washer
16	1/2" Flat Washer
17	Belt Tightener Swivel Mount
18	Rocker Arm Pivot Shaft
19	Rocker Arm Sleeve
20	3/8" x 2" Hex Bolt GR8
21	1/2" x 4" Adjustment Tap Bolt
22	1/2" Hex Nut
23	Gearbox Oil Filler Extension / Breather
24	Hose Barb — 10 MORB x 3/4" Hose
25	Swivel — 8 ORB x 1/2" FPS

Figure 80. Installing the Hydraulic Pump

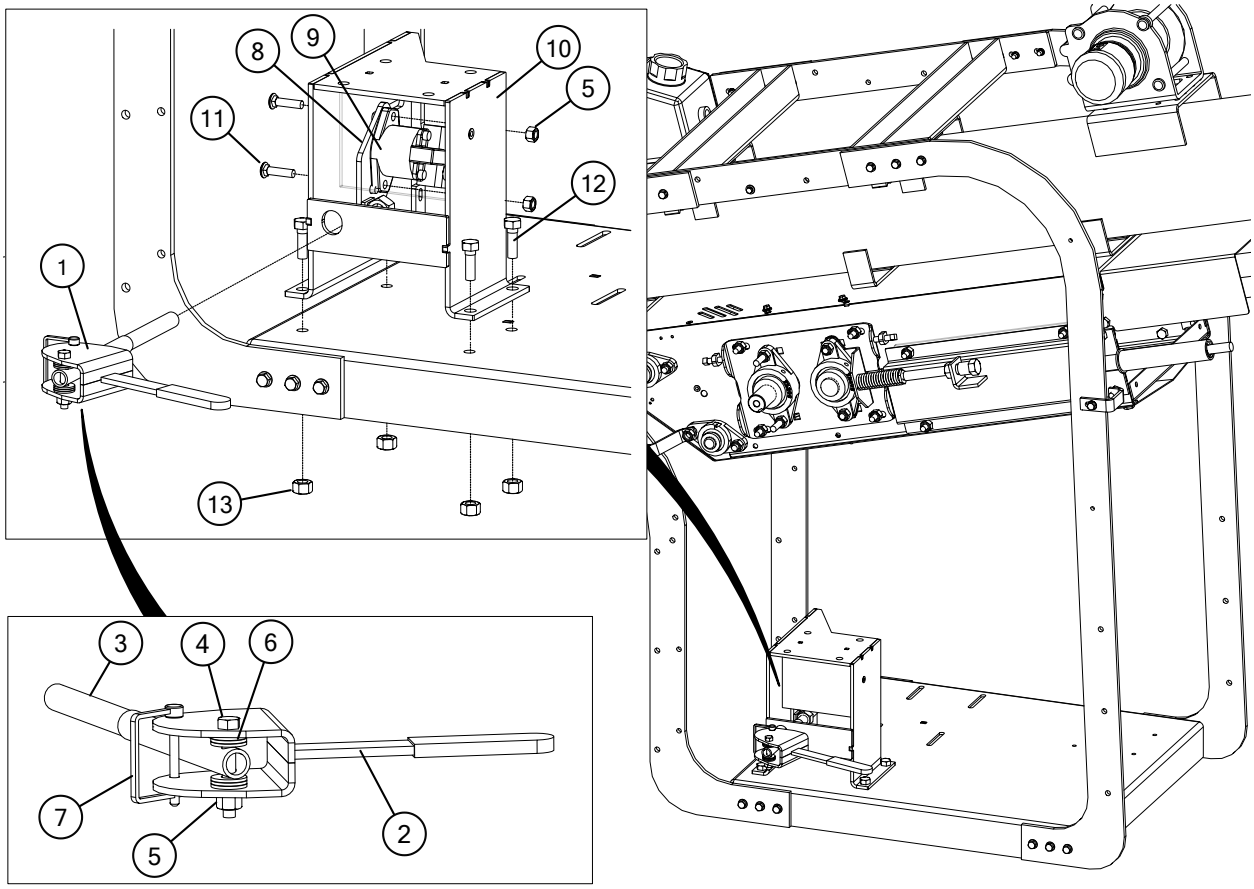

Figure 81. Installing Hydraulic Fittings

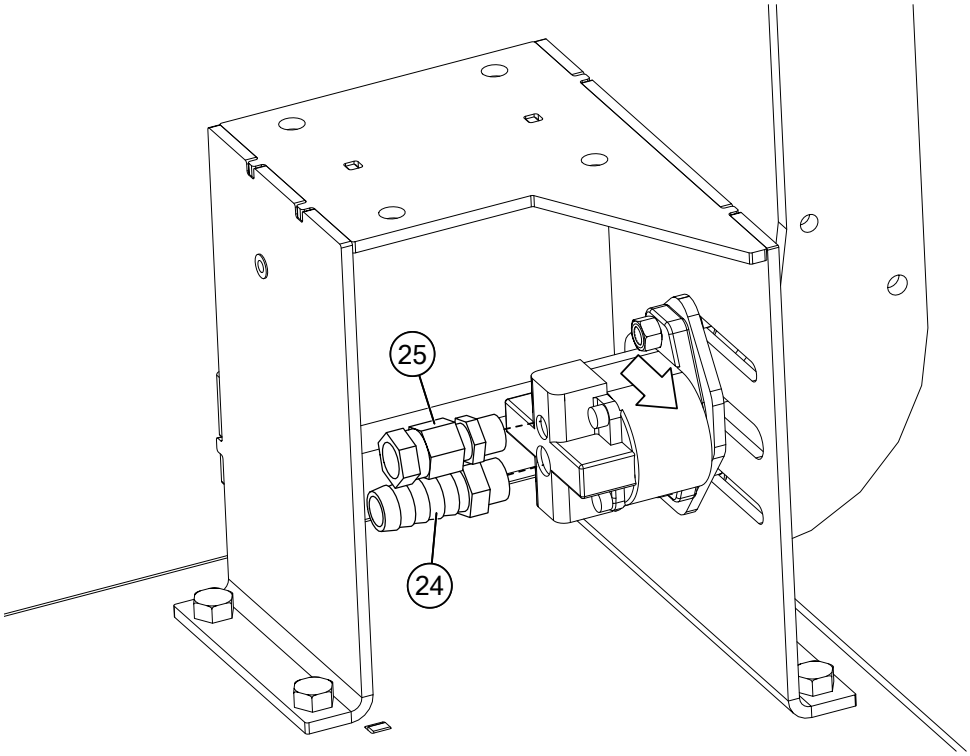

Figure 82. Installing the Gearbox and Belt Tightener

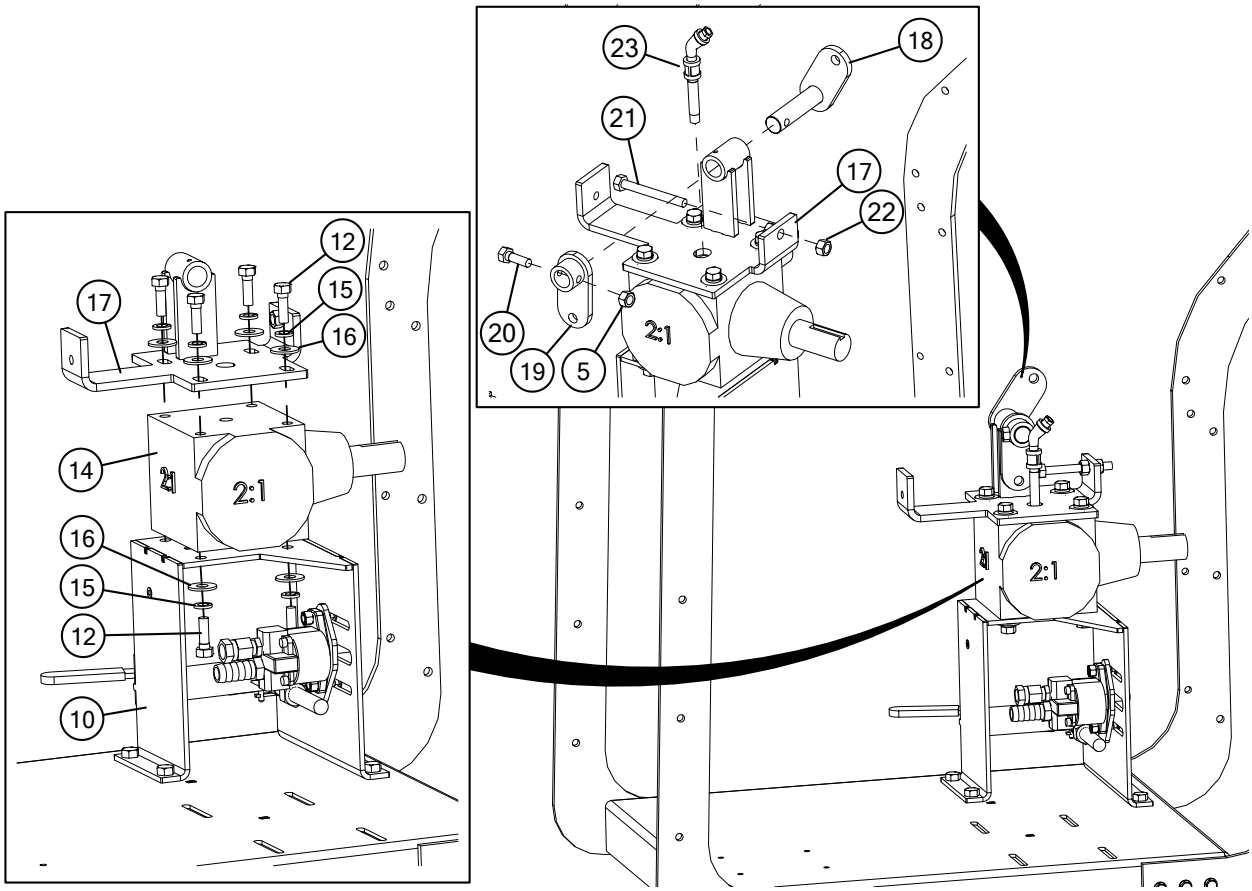

3.32.4 Install the Gas Engine

1. Install the engine adjustment plate (1) and engine (2) onto the engine platform using four 3/8" x 2" hex bolts (3), 3/8" flat washers (4), and 3/8" locknuts (5). At the same time, secure the ground wires for the battery and clutch to the motor mount bolt (3) (location indicated by the red arrow) using a 3/8" flat washer (4) (see Figure 83).

   Important

   Installation and wiring for the gas engine are to be done by a certified technician and should be based on OEM (original equipment manufacturer) specifications. Some hardware has been included in the drive kit. Not all installations will require all parts. After the conveyor is completely assembled, place finishing zip-ties on all cables and wiring to ensure all lines are snug in place.

2. Remove the plug insert (6) and assemble the square plug (7), elbow (8), and drain pipe (9) into the engine's oil drain port.

Table 43. Engine Components

Item	Description
1	Engine Adjustment Plate
2	Engine
3	3/8" x 2" Hex Bolt

Table 43 Engine Components (continued)

Item	Description
4	3/8" Flat Washer
5	3/8" Nylon Locknut
6	Plug Insert
7	Square Plug
8	Elbow
9	4–1/2" Drain Pipe

Figure 83. Installing the Engine

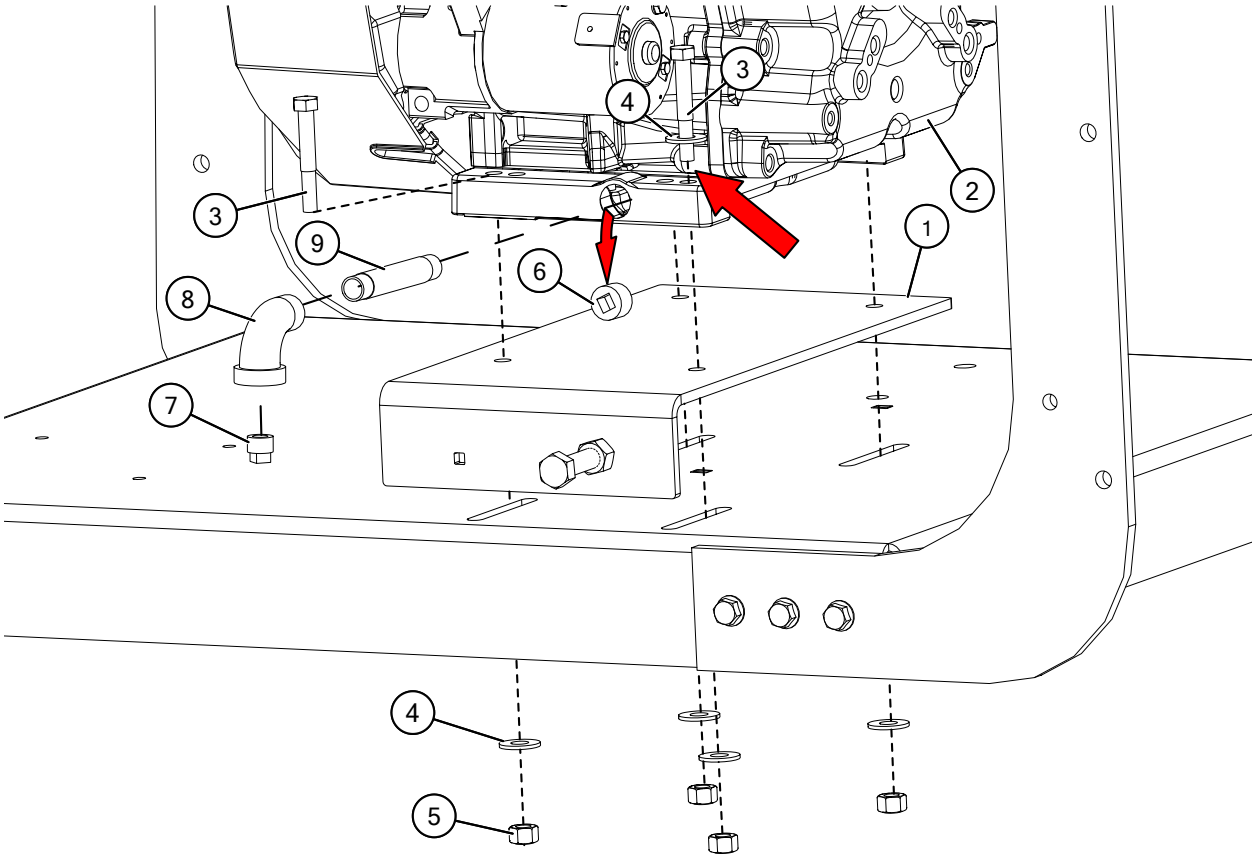

3.32.5 Install the Pulleys, Belts, and Soft Start Electric Clutch

1. Install the hydraulic pump pulley (1) onto the hydraulic pump (see Figure 84).

   Note

   The key for the pump pulley is factory pre-installed on the hydraulic pump shaft.

2. Install the hydraulic drive pulley (2) onto the engine shaft with a 1/4" x 3-1/4" square key (3).
3. Align the hydraulic pump and drive pulleys with a straightedge.
4. Install the hydraulic pump belt (4).

5. Install the 12" pulley (5) onto the gearbox with a 3/8" x 2" square key (6) (with the pulley “nose” facing outward away from the gearbox).
6. Tighten gearbox bolts.
7. Install the idler pulley (7) onto the rocker arm pivot shaft (8) with a 1/2" x 3-1/2" bolt (9), three 1/2" flat washers (10), two bushings (11), and a 1/2" locknut (12). The side of the idler pulley with an inset hub faces away from the engine.
8. Install the 6" pulley (13) onto the gearbox with a 3/8" x 2" square key (6) (with the pulley “nose” facing inward toward the gearbox).
9. Install the 10" pulley (14) onto the s-drive with a 3/8" x 2" square key (6) (with the pulley “nose” facing inward toward the s-drive).
10. Align the gearbox and s-drive pulleys with a straightedge.
11. Apply grease to the idler pulley.
12. Install the banded belt (15) on the gearbox and s-drive pulleys (13, 14).
13. Set the tension on the banded belt using the adjustment tap bolt (16) in the swivel mount.

    Note

    For tensioning, belts should deflect 1/2" (1.27 cm) to 3/4" (1.91 cm) when pushed on with a 5 lb (22.2 N) force.

Table 44. Pulley and Belt Components

Item	Description
1	4-1/2" x 1/2" Hydraulic Pump Pulley
2	4-1/2" x 1-1/8" Hydraulic Drive Pulley
3	1/4" x 3-1/4" Square Key
4	30" Hydraulic Pump Belt (B30)
5	12" Double Pulley with 1-1/2" Bore
6	3/8" x 2" Square Key
7	4" Flat Triple Idler Pulley
8	Rocker Arm Pivot Shaft
9	1/2" x 3-1/2" Hex Bolt
10	1/2" Flat Washer
11	Bushing 3/4" OD x 1/2" ID x 1" Bronze
12	1/2" Nylon Locknut
13	6" Double Pulley with 1-1/2" Bore
14	10" Double Pulley with 1-1/2" Bore
15	Banded Belt (2B65)
16	1/2" x 4" Tap Bolt

Figure 84. Installing the Pulleys and Belts

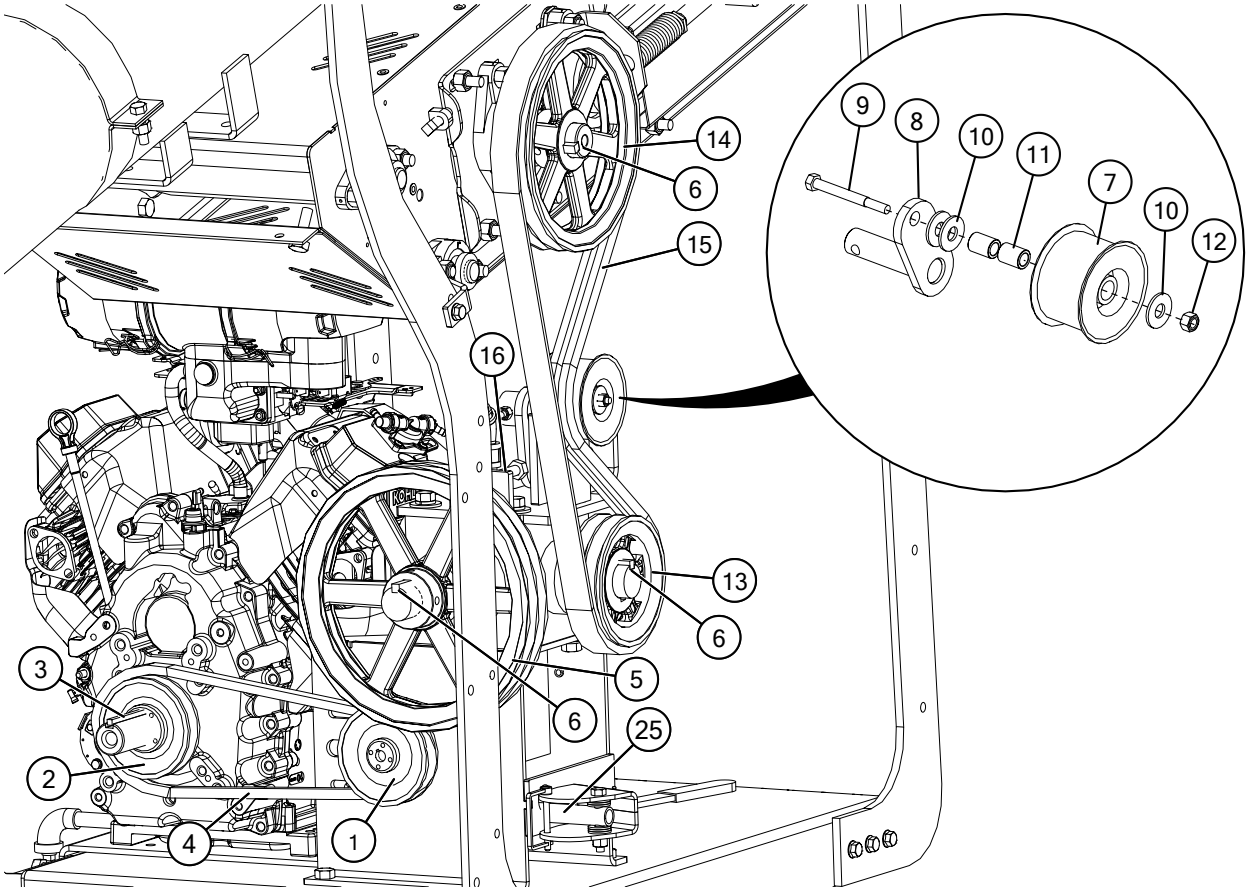

14. Install the clutch stop bracket (17) onto the engine with a 3/8" x 1-1/4" bolt (18) and 3/8" lock washer (19) (see Figure 85).
15. Slide the soft start electric clutch (20) onto the engine shaft and clutch stop bracket (17). Align the clutch pulley with the 12" pulley (5) using a straightedge. Tighten the clutch using a 7/16" x 3" fine-thread bolt (21) and 7/16" lock washer (22).

    Note

    The soft start electric clutch comes with a factory pre-assembled 4" double pulley which is assembled onto the engine shaft using the same 1/4" x 3-1/4" key (3) that was used to install the hydraulic drive pulley (1).

16. Install two drive belts (23).
17. Set the tension of the drive belts (23) using the tap bolt (24) for the engine adjustment plate.
18. Set the tension of the hydraulic pump belt (4) by threading the pivot shaft (25) in or out of the nut of the pump mount plate.
19. Install the clutch wiring module mount (26) using one 3/8" x 1" flange bolt (27) and locknut for the hopper-side left mount arm.
20. Install the electric clutch wiring module (28) using two 1/4" x 1" Tek screws (29).
21. Install the wiring for soft start electric clutch (see Figure 86). Secure the ground wire to the motor mount bolt.

Table 45. Soft Start Clutch and Belt Components

Item	Description
17	Clutch Stop Bracket
18	3/8" x 1-1/4" Hex Bolt Gr8
19	3/8" Lock Washer Plated
20	Soft Start Electric Clutch (with 4" Double Pulley)
21	7/16" x 3" Hex Bolt Gr8 Fine
22	7/16" Lock Washer Plated
23	Drive Belt (B56)
24	1/2" x 3" Tap Bolt
25	Pump Pivot Shaft
26	Clutch Wiring Module Mount
27	3/8" x 1" Flange Bolt
28	Electric Clutch Wiring Module
29	1/4" x 1" Tek Screw

Figure 85. Installing the Soft Start Electric Clutch

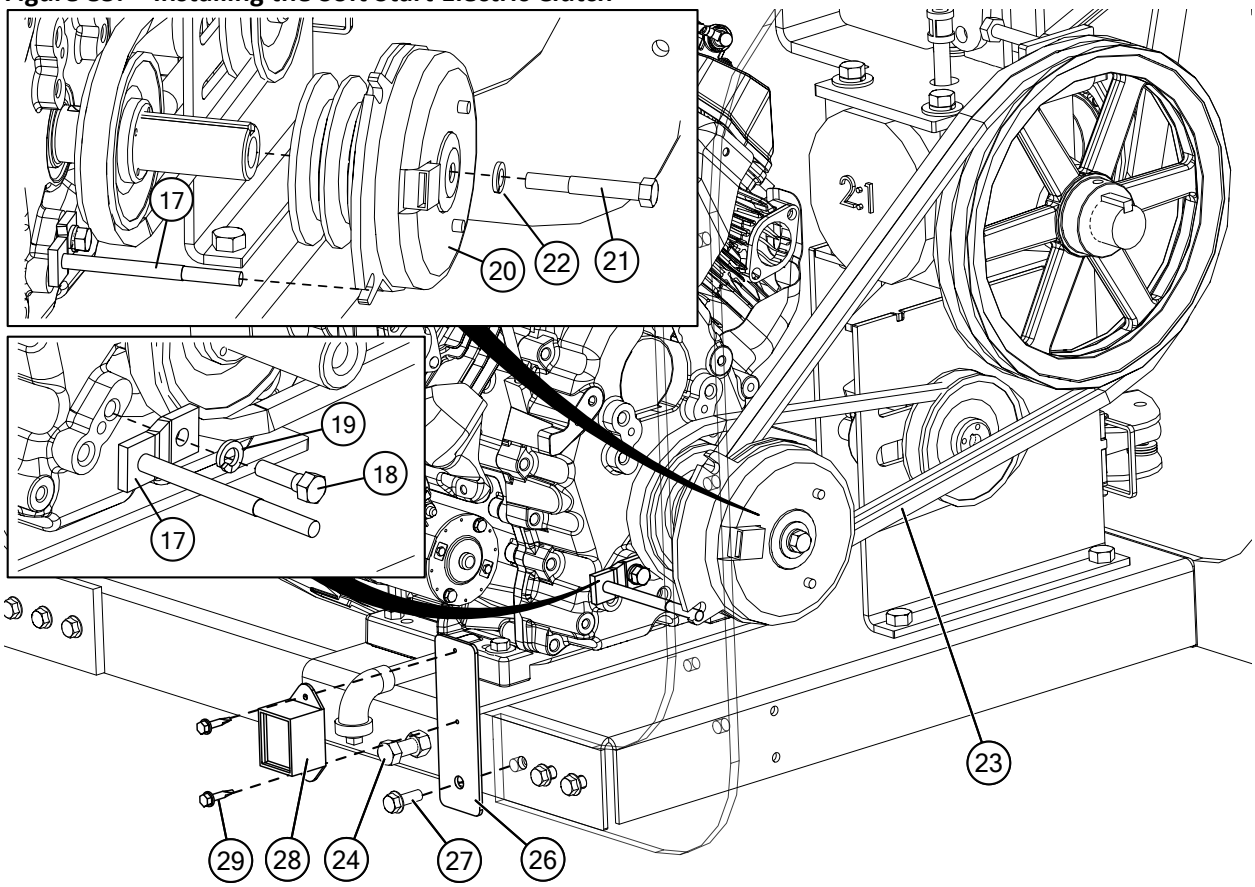

Figure 86. Soft Start Electric Clutch Wiring

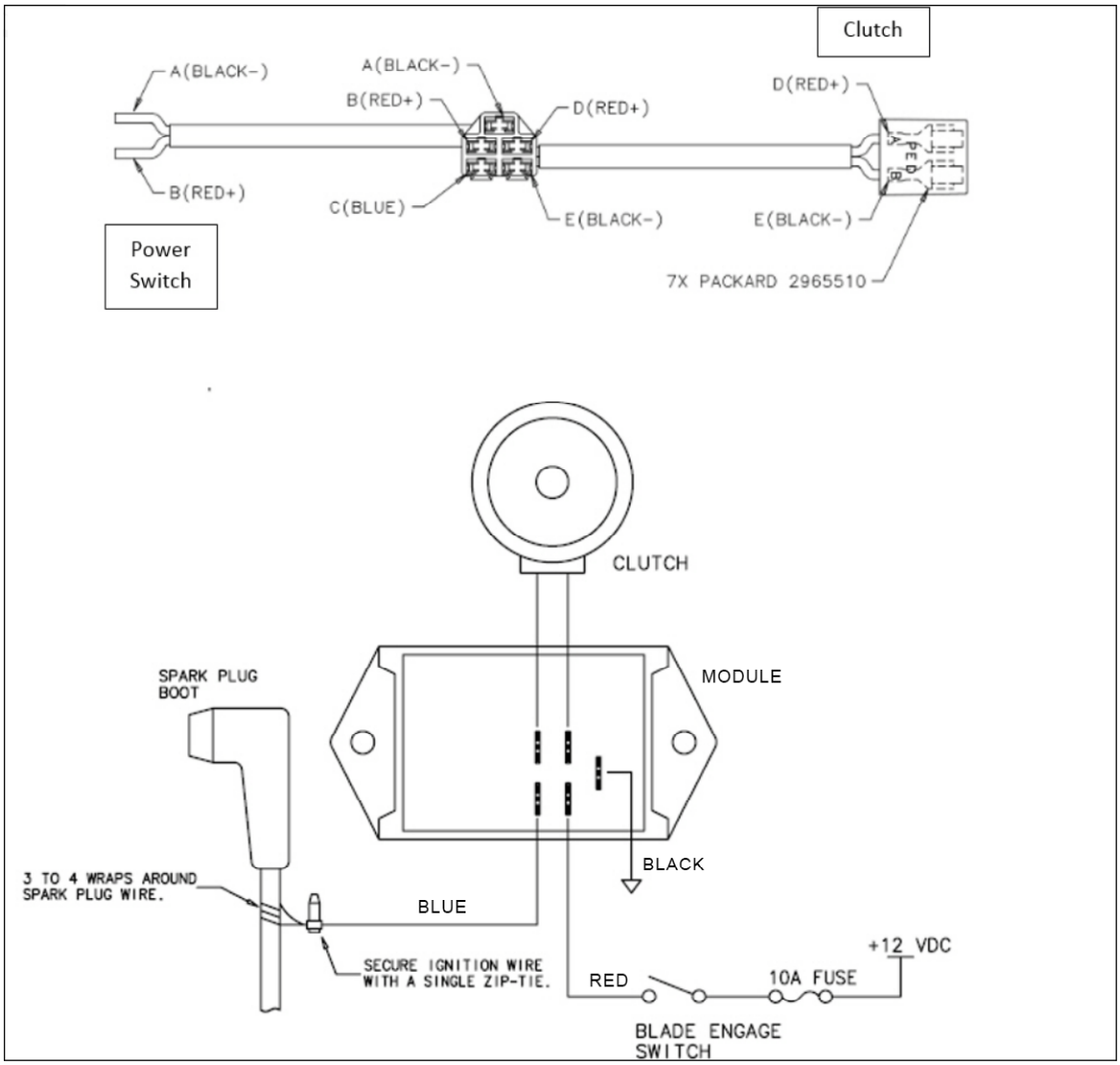

3.32.6 Install the Battery and Engine Guards

1. Install battery box (4) by drilling holes in the box that align with the pre-drilled holes on the engine platform and using 5/16" x 1" bolts (2) and 5/16" locknuts (1) (see Figure 87).
2. Install battery (3) into battery box (4).
3. Connect two 37" battery cables (4) to the engine as follows:
   a. The ground cable is fastened to a motor mount bolt.
   b. The positive cable is connected to the starter.
4. Install the choke and throttle cables to the engine and route them to the control box.
5. Fasten the top end of the muffler support bracket (7) onto the muffler shield and muffler (not shown).
6. Install the engine exhaust pipes onto the engine (not shown). Install the muffler and muffler shield onto the engine exhaust pipes. Install the rain cap on the muffler.

7. Fasten the bottom end of the muffler support bracket (7) to the engine adjustment plate with a 1/4" x 3/4" carriage bolt (6) and 1/4" locknut (8).
8. Fill engine with oil up to the dipstick line.

   Note

   For a Kohler engine, the oil quantity required is approximately 1.8 L.

9. Refer to the Hydraulic Wet Kit section to install the hydraulic tank.
10. Route and install the hydraulic hoses (see “Assemble the Hydraulic Hose” in your wheel move manual for guidelines on routing hydraulic hoses).
11. Install the hopper-side engine guard (6) using 3/8" x 1" bolts (7) and 3/8" locknuts (8) (see Figure 88).
12. Install the spout-side engine guard (9) using 3/8" x 1" bolts (7) and 3/8" locknuts (8).

    Note

    Make sure the flange nuts are on the side of the engine guard as shown so the serrations in the flange nuts cut through the paint and into the metal of the engine guard to provide a good connection for the ground wire.

Figure 87. Battery and Muffler Support Bracket

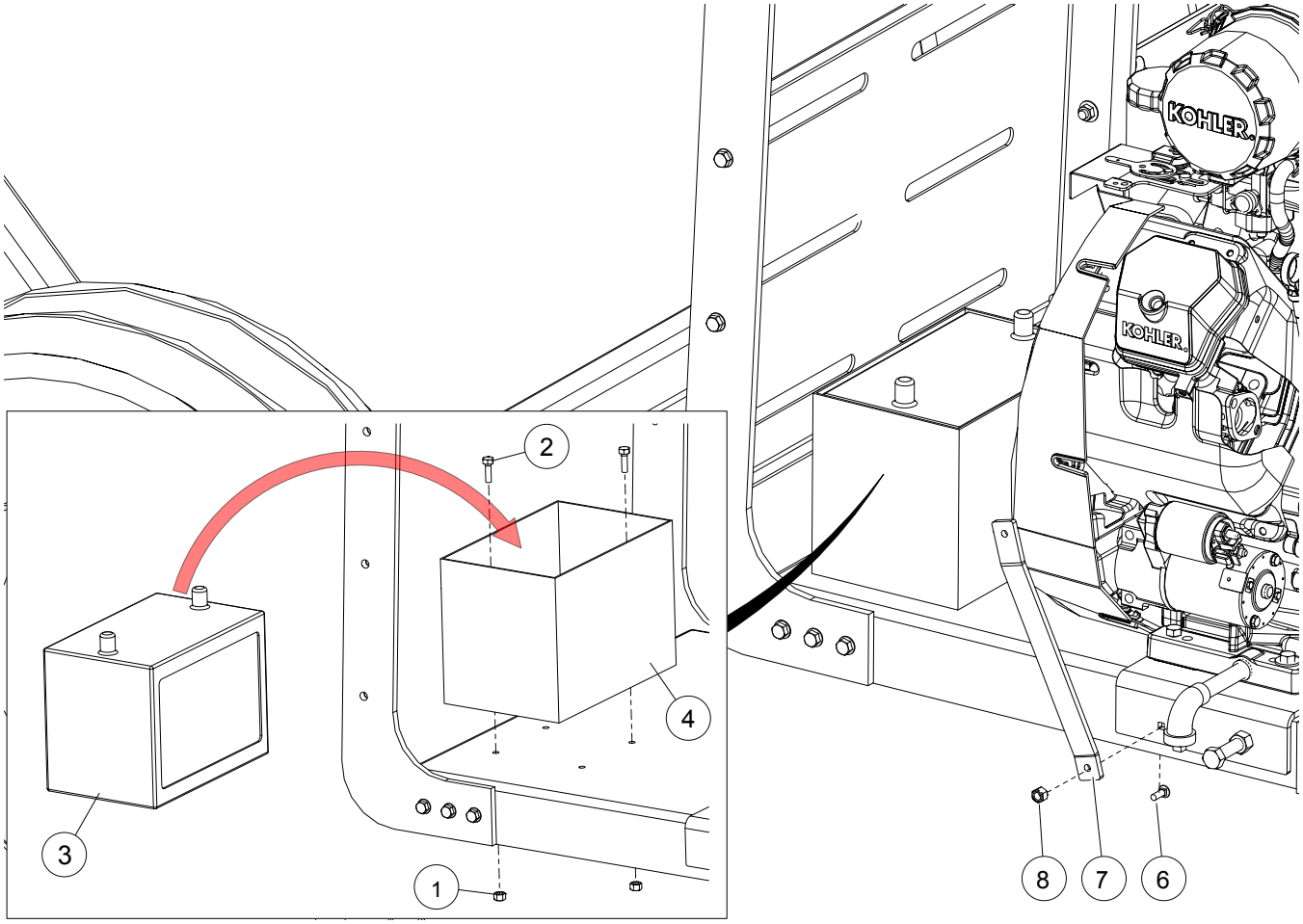

Figure 87 Battery and Muffler Support Bracket (continued)

Table 46. Battery and Engine Guards

Item	Description	Quantity
1	5/16" Nylon Locknut	2
2	5/16" x 1" Hex Bolt	2
3	Battery	1
4	Battery Box	1
6	1/4" x 3/4" Carriage Bolt	1
7	Muffler Support Bracket	1
8	1/4" Nylon Locknut	1

Figure 88. Engine Guards

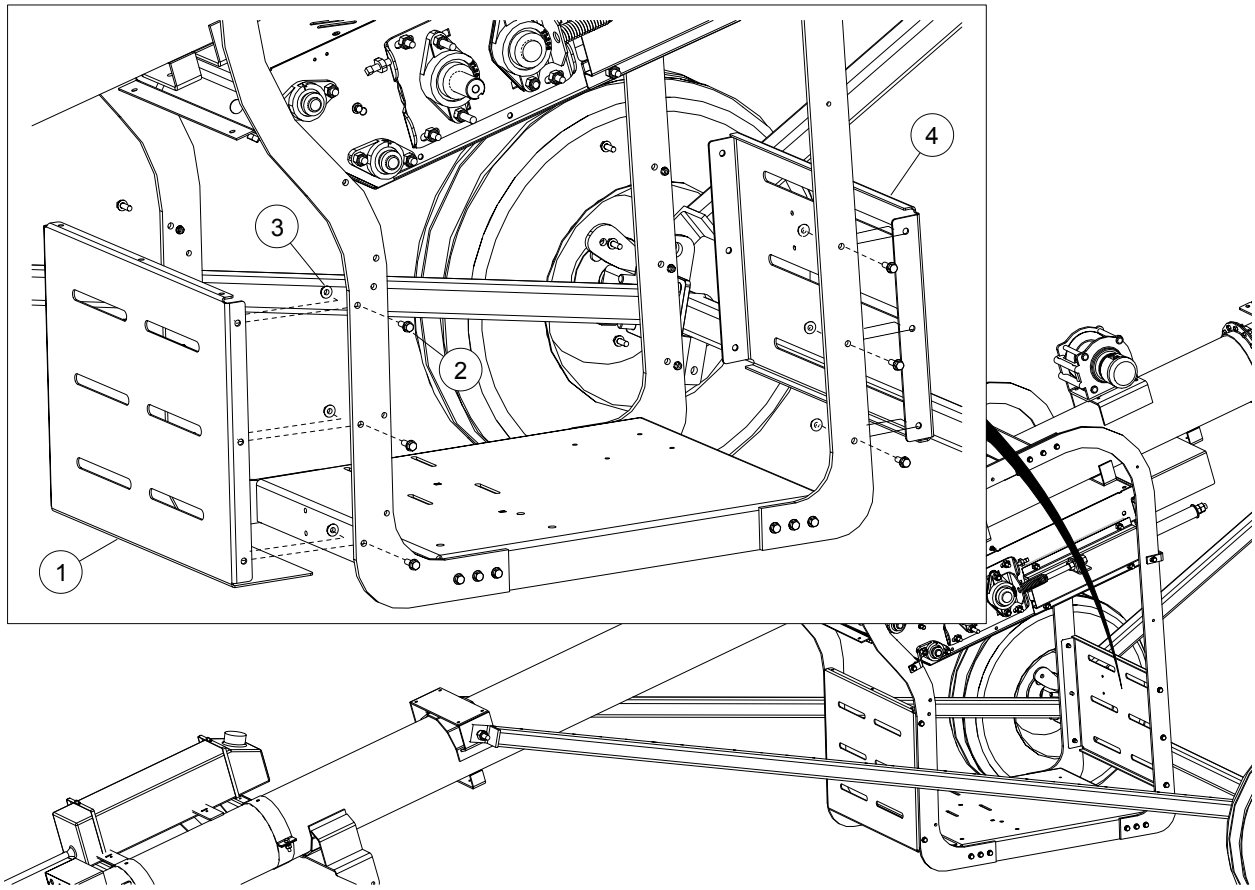

Item	Description	Quantity
1	Hopper — Side Engine Guard	1
2	3/8" x 1" Flange Bolt	12
3	3/8" Flange Locknut	12
4	Spout — Side Engine Guard	1

Figure 88 Engine Guards (continued)

10–7	Muffler Support Bracket	1
11–6	1/4" x 3/4" Carriage Bolt	1
12–8	1/4" Nylon Locknut	1

3.32.7 Install the Guards

1. Install the top guard back plate (5) using 1/4" x 3/4" bolts (4), 1/4" lock washers (2), and 1/4" flat washers (3) (see Figure 89).
2. Install the bottom guard back plate (6) using 1/4" x 3/4" bolts (4), 1/4" lock washers (2), and 1/4" flat washers (3).
3. Install the belt guard hinge (7) using 3/8" x 1" bolts (8) and 3/8" locknuts (10).
4. Install the clasp plate (11) using a 3/8" x 1-1/4" bolt (9) and 3/8" locknut (10).
5. Install the two top clasp brackets (12) using 3/8" x 1" bolts (8) and 3/8" locknuts (10).
6. Install the belt guard (14) using the belt guard hinge 3/8" x 5-1/2" bolt (13) and 3/8" locknut (15). Adjust the top clasp brackets and belt guard clamps as necessary for the guard to close properly and tightly.
7. Install the top (17) and side (16) engine guards using 1/4" x 3/4" bolts (4), 1/4" lock washers (2), and 1/4" flat washers (3).
8. Install the lower left s-drive guard (18) using 1/4" x 3/4" bolts (4), 1/4" lock washers (2), and 1/4" flat washers (3).

Table 47. Guard Components

Item	Description	Quantity
2	1/4" Lock Washer	15
3	1/4" Flat Washer	15
4	1/4" x 3/4" Hex Bolt	15
5	Top Guard Back Plate	1
6	Bottom Guard Back Plate	1
7	Belt Guard Hinge	1
8	3/8" x 1" Bolt	4
9	3/8" x 1-1/4" Bolt	1
10	3/8" Locknut	5
11	Clasp Plate	1
12	Top Clasp Bracket	2
13	3/8" x 5-1/2" Hex Bolt	1
14	Belt Guard	1
15	3/8" Nylon Locknut	1
16	Side Engine Guard	1

Table 47 Guard Components (continued)

17	Top Engine Guard	1
18	Lower Left S-Drive Guard	1

Figure 89. Guards

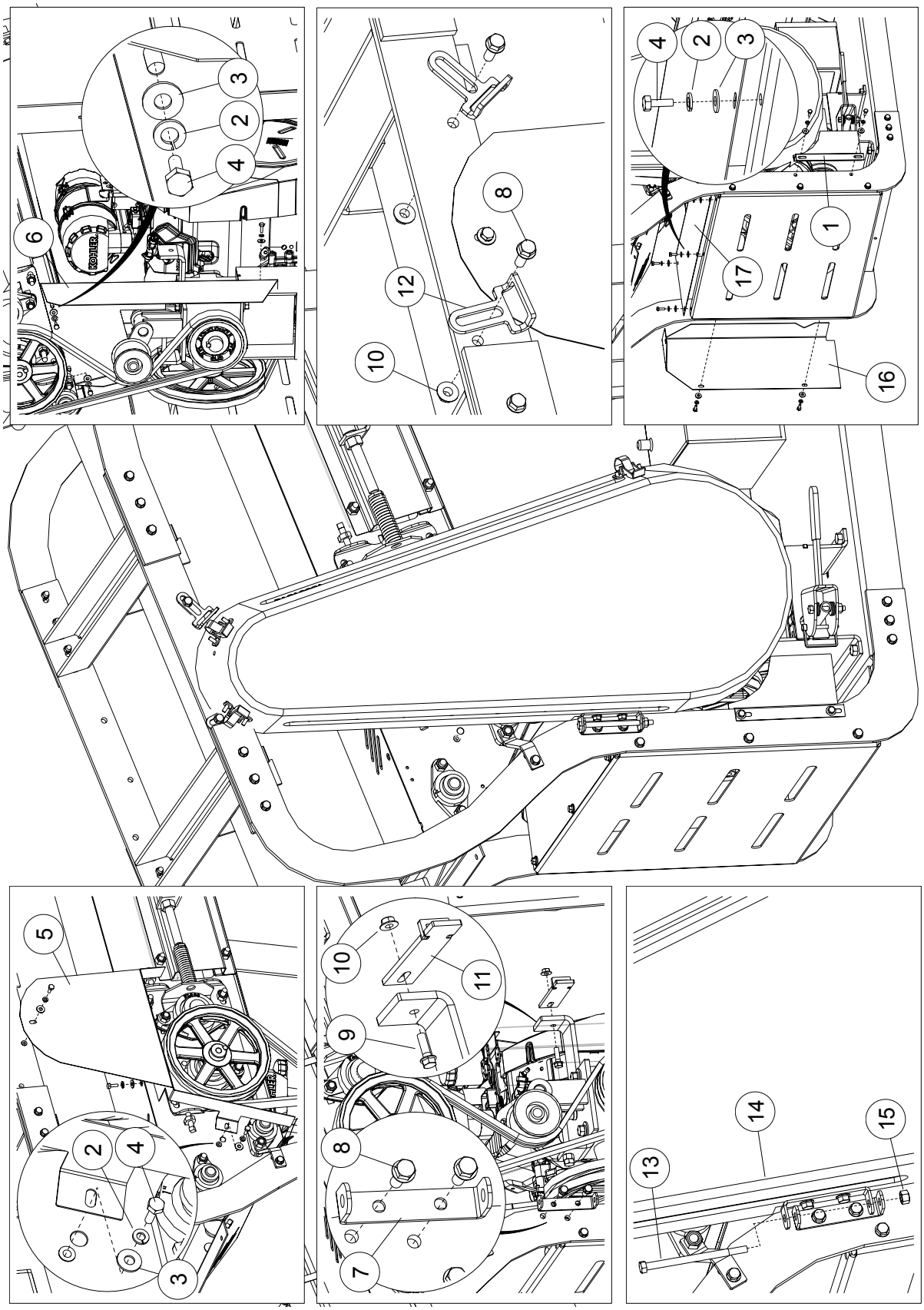

3.32.8 Installing Side Mounted Muffler

1. Loosely assemble the muffler and the muffler extension with the muffler clamps as seen in Figure 90
2. Use a pry bar to move plastic guard and loosely attach whiz-nut as seen in Figure 91
3. Ensure the muffler and the muffler extension are firmly inserted.
4. Tighten the whiz-nut and the muffler clamps.

Figure 90. Installing Muffler Extension to the Muffler

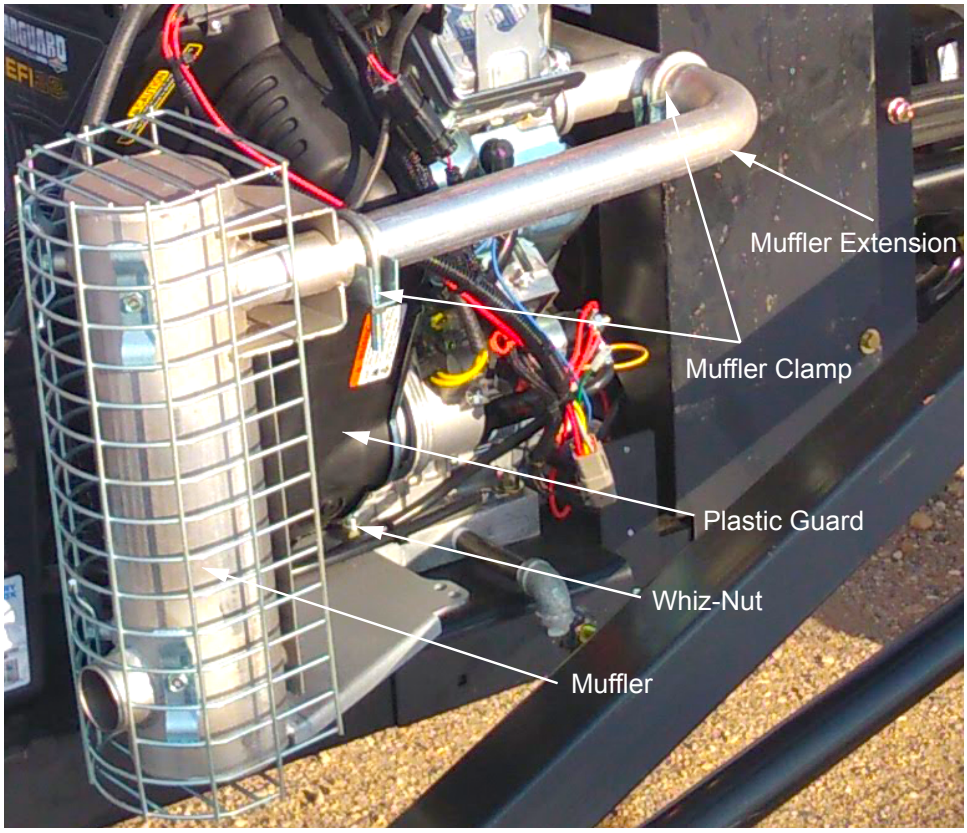

Figure 91. Setting the Muffler Into Position

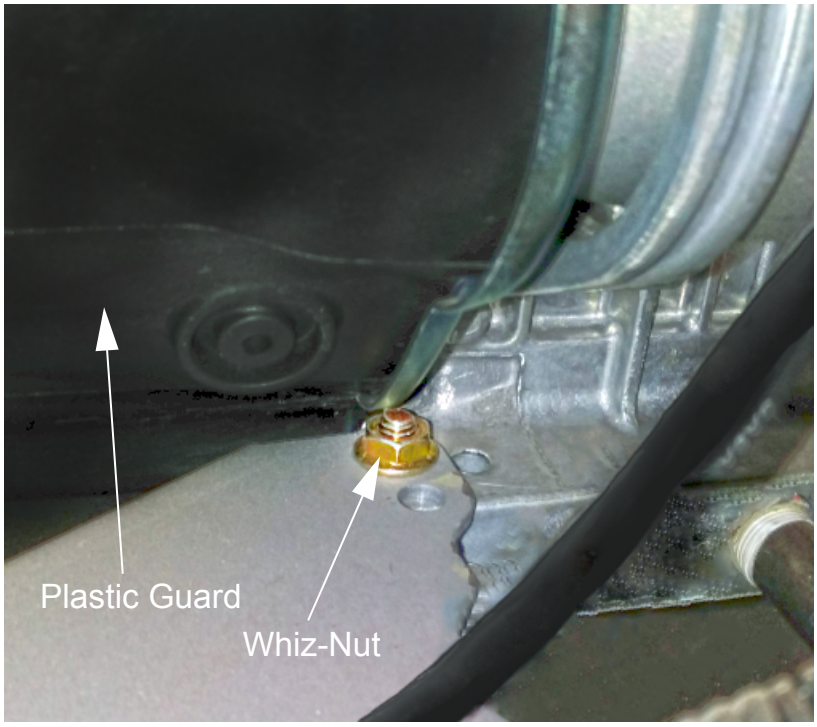

3.33. Gas Drive — Control Box

1. **For models that do not have a welded mount bracket:** Attach the control box to the tube with 10" x 2-1/2" u-clamp (9), 7/16" x 1-1/2" bolts (10) and 7/16" nylock nuts (11).
2. Remove the top cover (1) (see Figure 92 on page 110). Tighten the u-clamp until the tube begins to crimp.
3. Mount the throttle cable (2), choke cable (5) (if equipped with a carburetor engine), clutch switch (3) (if equipped with an electric clutch), and ignition switch (4). See Figure 93.
4. Consult the OEM (original equipment manufacturers) manual to make all required electrical connections. Remove the key, plug in the extension wiring harness (12), and fasten it to the side plastic guard on the engine using small self-tapping screws (see Figure 94). After the conveyor is completely assembled, place finishing zip-ties on all cables and wiring to ensure all lines are snug in place.
5. Replace the top cover and secure with 1/4" x 3/4" bolts (8), 1/4" washers (6), and 1/4" lock washers (7).

Table 48. Control Box Components

Item	Description	Quantity
1	Control Box Top Cover	1
2	Throttle Cable	1
3	Clutch Switch	1
4	Ignition Switch	1
5	Choke Cable	1
6	1/4" Flat Washer	2
7	1/4" Lock Washer	2

Table 48 Control Box Components (continued)

Item	Description	Quantity
8	1/4" x 3/4" Hex Bolt	2
9	10" x 2-1/2" U-clamp (Not Shown)	2
10	7/16" x 1-1/2" Bolt (Not Shown)	2
11	7/16" Nylon Locknut (Not Shown)	2
12	Extension Wiring Harness	1
13	Black Wire for Light Kit (Grounded on Control Box)	1

Figure 92. Control Box Connections and Hardware

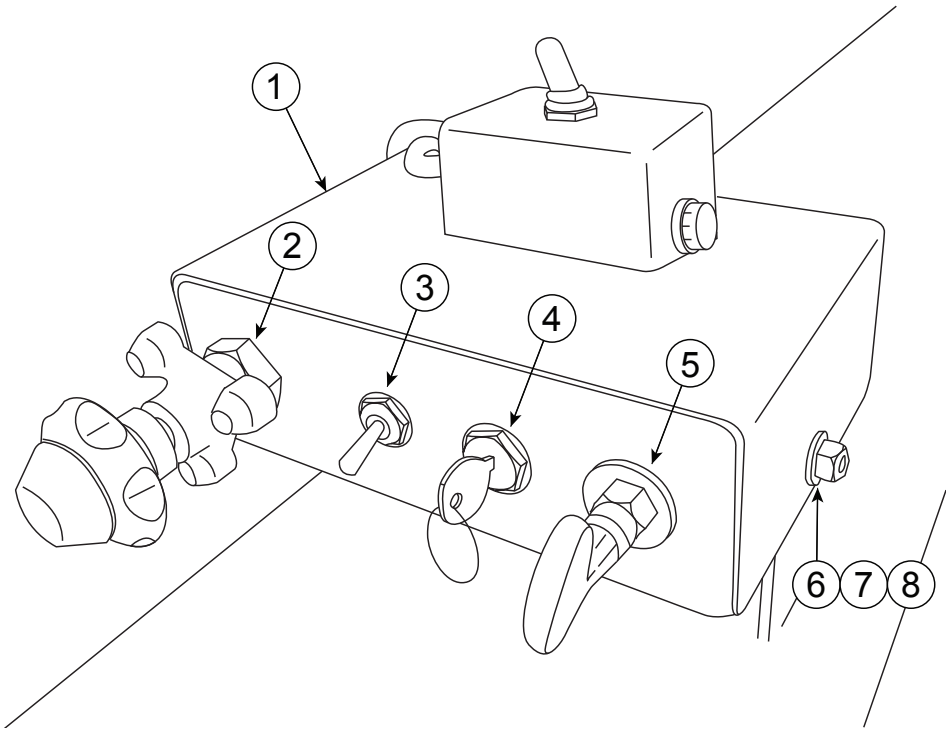

Figure 93. Control Box Inside Connections

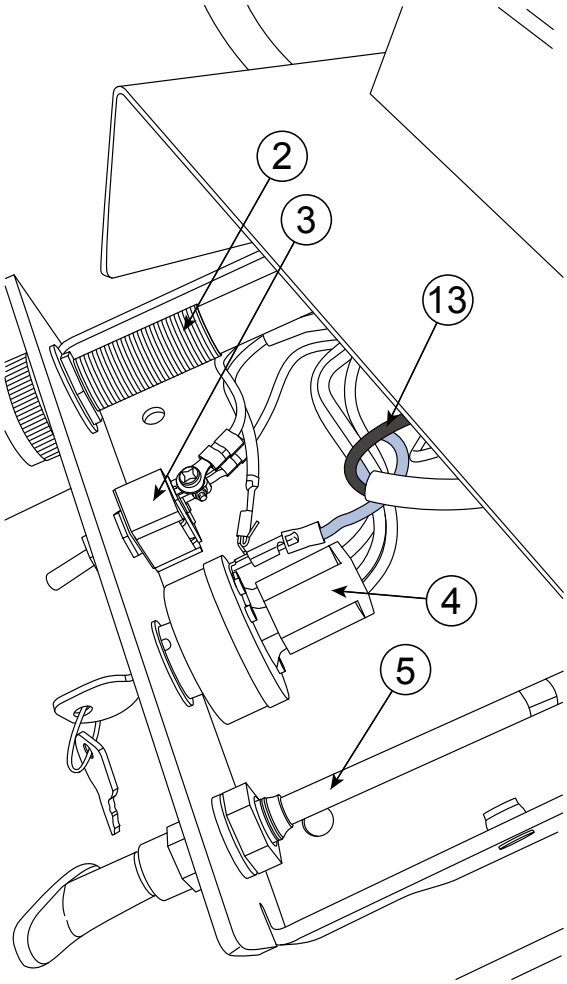

Figure 94. Plugging and Fastening Extension Wiring Harness

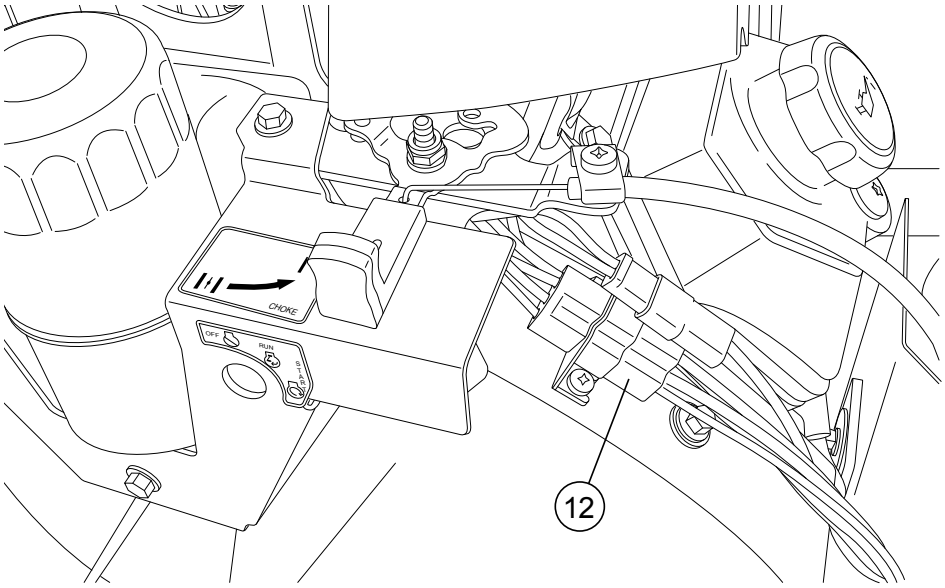

3.34. Install the Tank Kit and the Primer Bulb

Depending on the region two different versions of tank kit are provided with the conveyors. The size and shape of the fuel tank can vary depending on the conveyor series. EPA tanks are provided to the conveyor for US only. Examples of EPA and non-EPA tank are shown in Figure 95 below:

Figure 95. Gas Tank Type

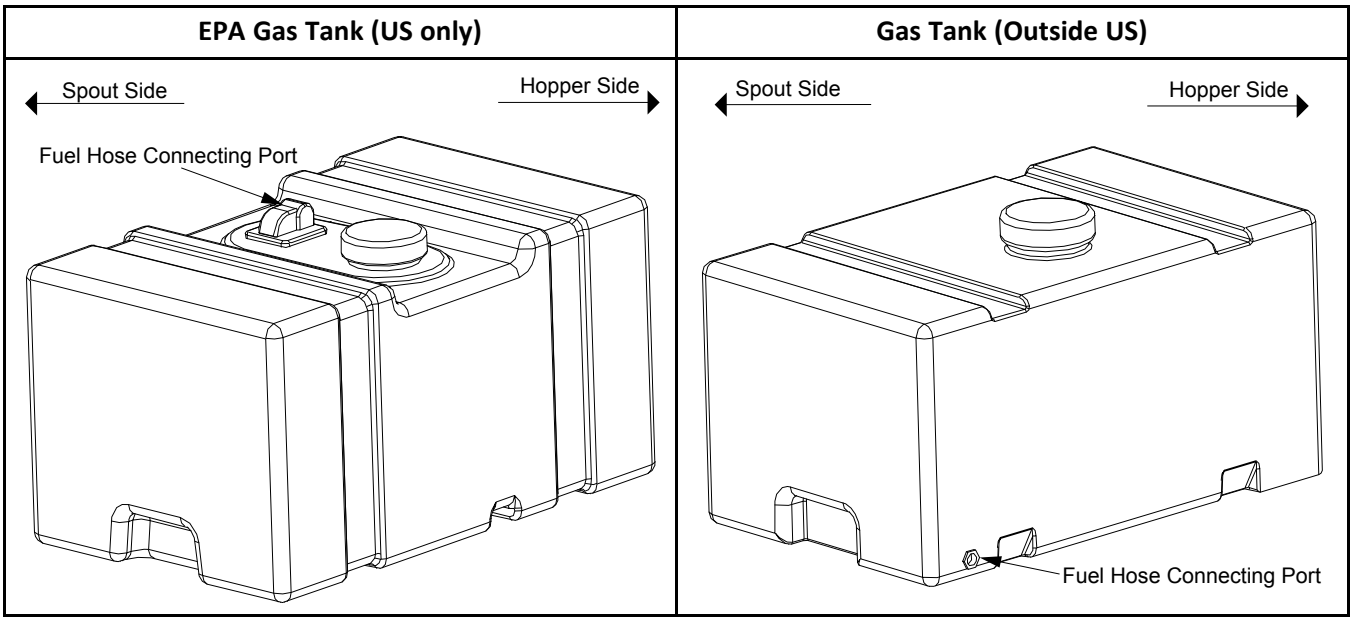

3.34.1 Gas Drive — EPA Tank Kit (for USA only)

1. Attach the plastic tank mount bracket (1) to the tube using 7/16" x 1" bolts (2) and 7/16" locknuts (3) (see Figure 96).
2. Secure the tank (6) to the tank bracket with gear clamps (4) (see Figure 97).
3. Attach the 1/4" hose barb (7) to the tank outlet (see Figure 98).
4. Connect the 1/4" fuel line to the hose barb and primer bulb with hose clamps (8).
5. Connect a fuel filter using 1/4" fuel line to the primer bulb. Use a reasonable length of fuel line so that the fuel demand valve can easily be installed between the primer bulb and the fuel filter.
6. Cut the 1/4" fuel line between the primer bulb and the fuel filter. Insert the fuel demand valve (10) into the fuel line with hose clamps (8) (see Figure 99).

Table 49. Gas Tank Components

Item	Description	Quantity
1	Plastic Tank Mount Bracket	1
2	7/16" x 1" Hex Bolt	4
3	7/16" Nylock Nut	4
4	36" Gear Clamp	2
6	45 L (12 gal) EPA Gas Tank w/Cap Fitting	1

Table 49 Gas Tank Components (continued)

Item	Description	Quantity
7	1/4" MPT x 1/4" Hose Barb	1
8	1/2" Hose Clamp	4
9	1/4" ID Fuel Line — 14' for over-mount drive, 20' for under-mount drive	1
10	EPA Fuel Demand Valve	1

Figure 96. Tank Mount

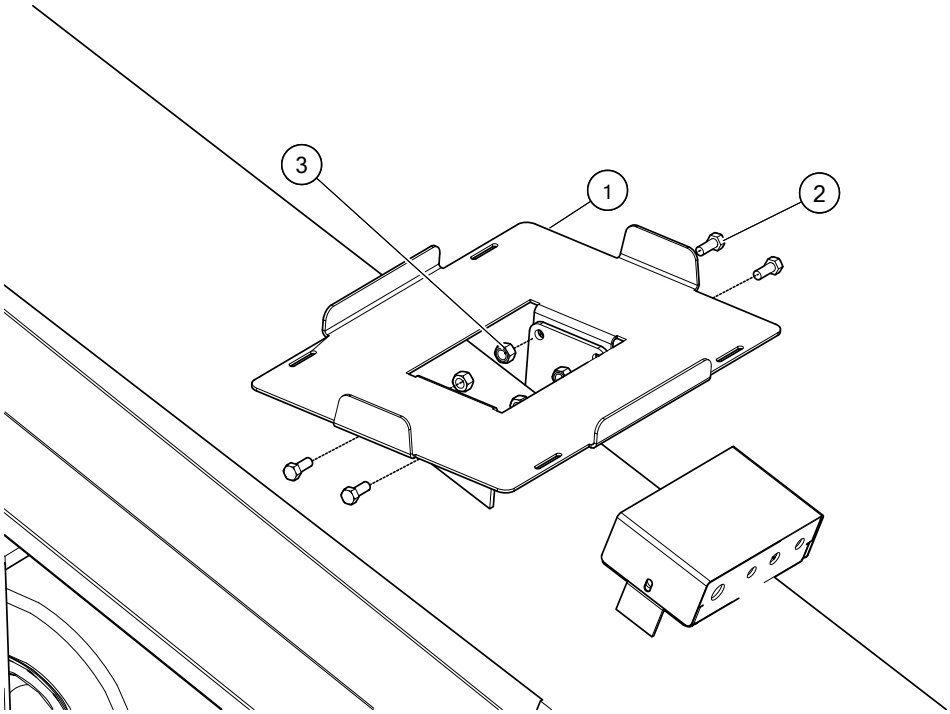

Figure 97. Gas Tank

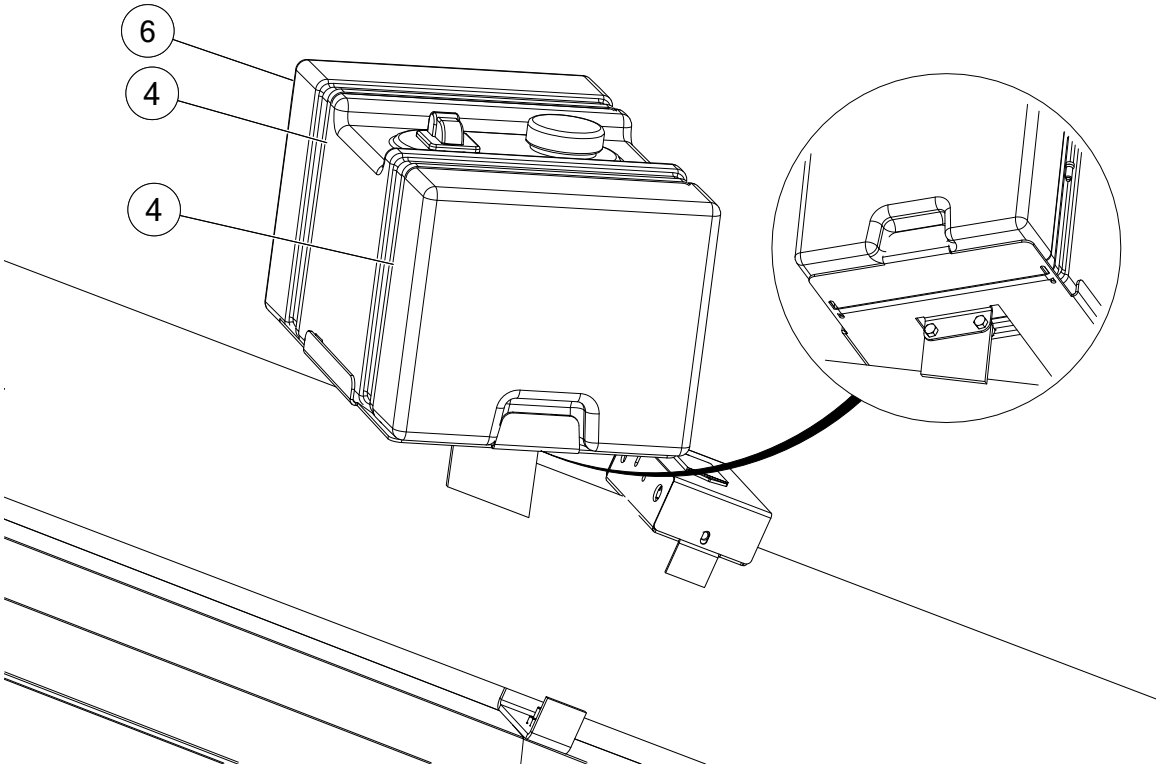

Figure 98. Fuel Line

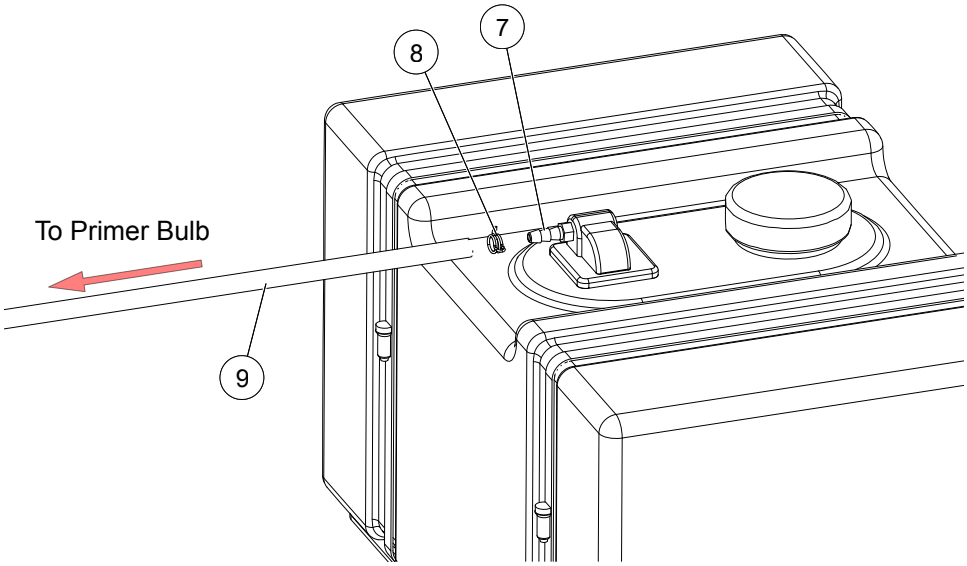

Figure 99. Fuel Demand Valve

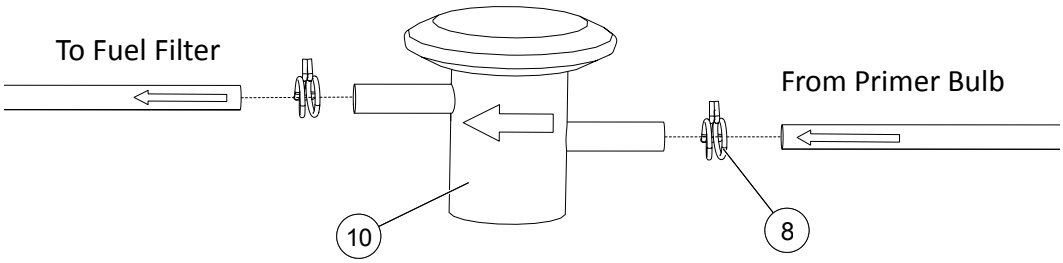

3.34.2 Gas Drive — Tank Kit (for outside USA)

1. Attach the plastic tank mount bracket (1) to the tube using 7/16" x 1" bolts (2) and 7/16" locknuts (3) (see Figure 100).
2. Secure the tank (6) to the tank bracket with gear clamps (4) (see Figure 101).
3. Attach the 1/4" hose barb (7) to the tank outlet.
4. Connect the 1/4" fuel line to the hose barb and primer bulb with hose clamps (8).
5. Insert the square plug (10) into the hole in the bottom of the tank nearer to the spout.

Table 50. Gas Tank Components

Item	Description	Quantity
1	Plastic Tank Mount Bracket	1
2	7/16" x 1" Hex Bolt	4
3	7/16" Nylock Nut	4
4	36" Gear Clamp	2
6	Gas Tank — 22 x 14 x 11.5 — 53 L (14 gal) — red	1
7	1/4" MPT x 1/4" Hose Barb	1
8	1/2" Hose Clamp	2
9	1/4" ID Fuel Line — 14'	1
10	Square Plug (threaded)	1

Figure 100. Tank Mount

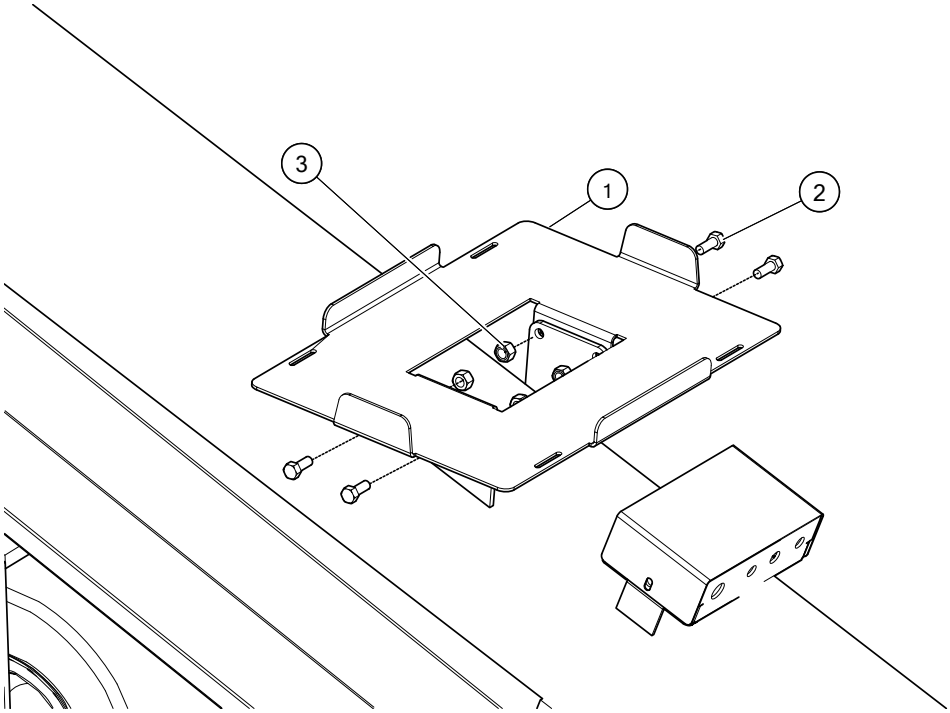

Figure 101. Gas Tank

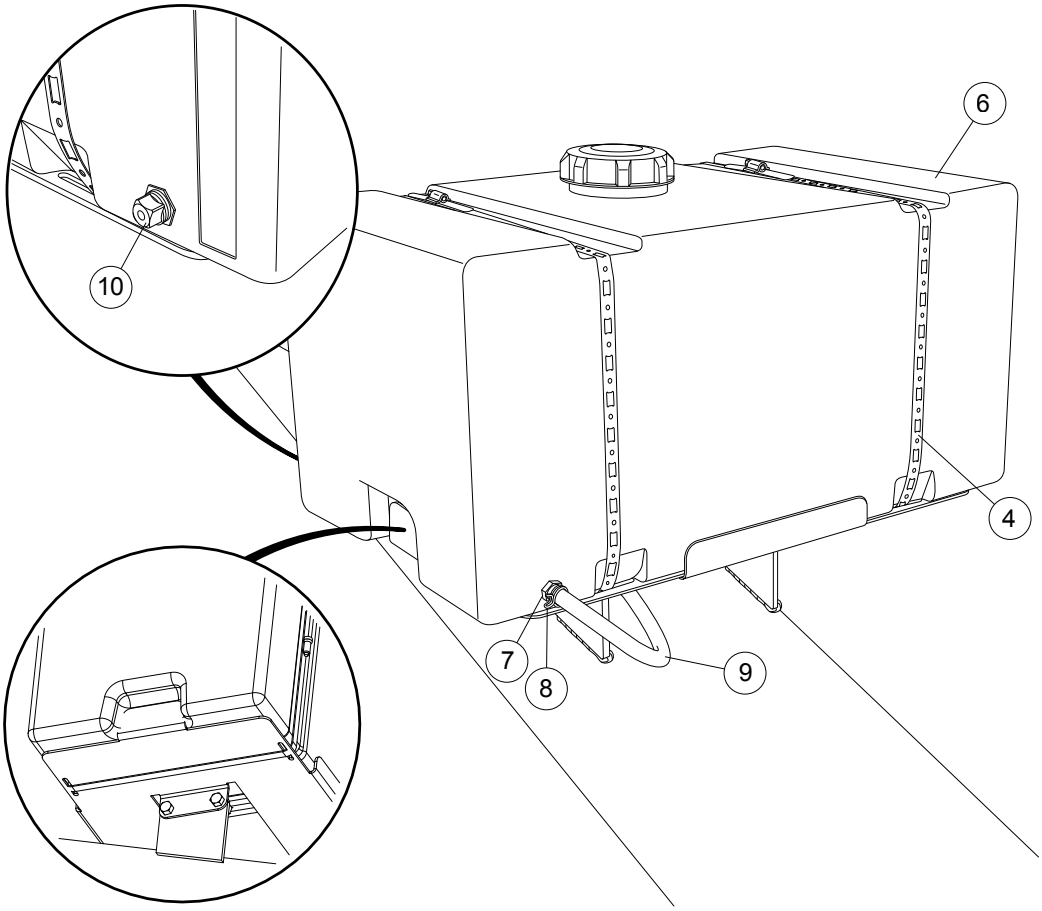

3.34.3 Gas Drive — Install Primer Bulb

Important

Check the primer bulb for setup orientation for proper fuel flow direction. The red end points of the bulb must connect to the gas tank side. Arrows, imprinted on the primer bulb, indicate the direction of fuel flow, which has to be from gas tank to gas engine. Check for any defects in the bulb and hoses prior to installation.

1. Route and install the fuel hose of reasonable length from the fuel tank to the primer bulb. The hose connection settings may very depending on the fuel tank type. Refer to Figure 102 and Figure 103.

Figure 102. Primer Bulb

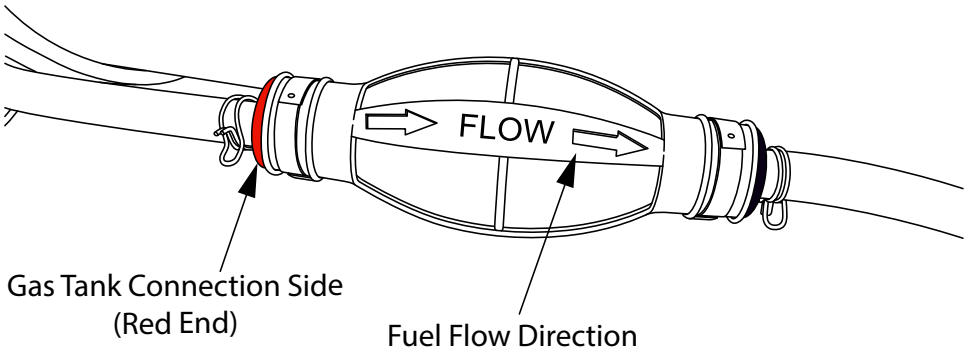

Figure 103. Hose Routing From Fuel Tank

EPA Tank	Non-EPA Tank
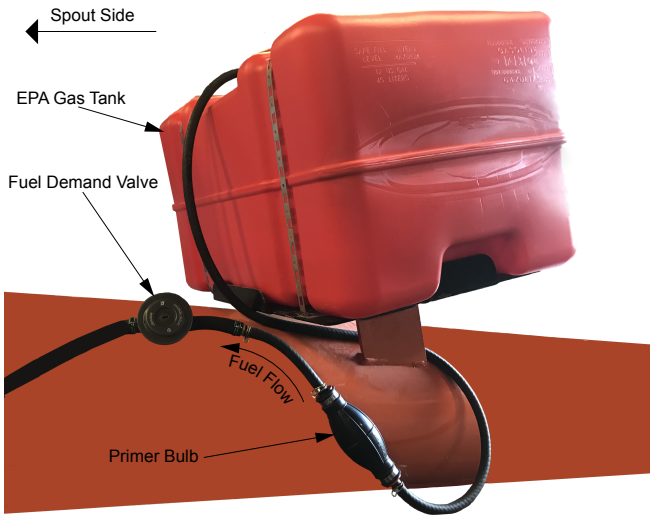	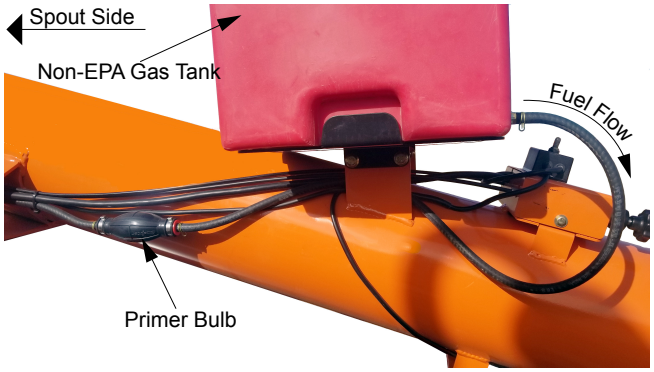

2. Use hose clamps to secure the hose tightly at each ends of the fuel hose.

Figure 104. Install and Secure the Primer Bulb

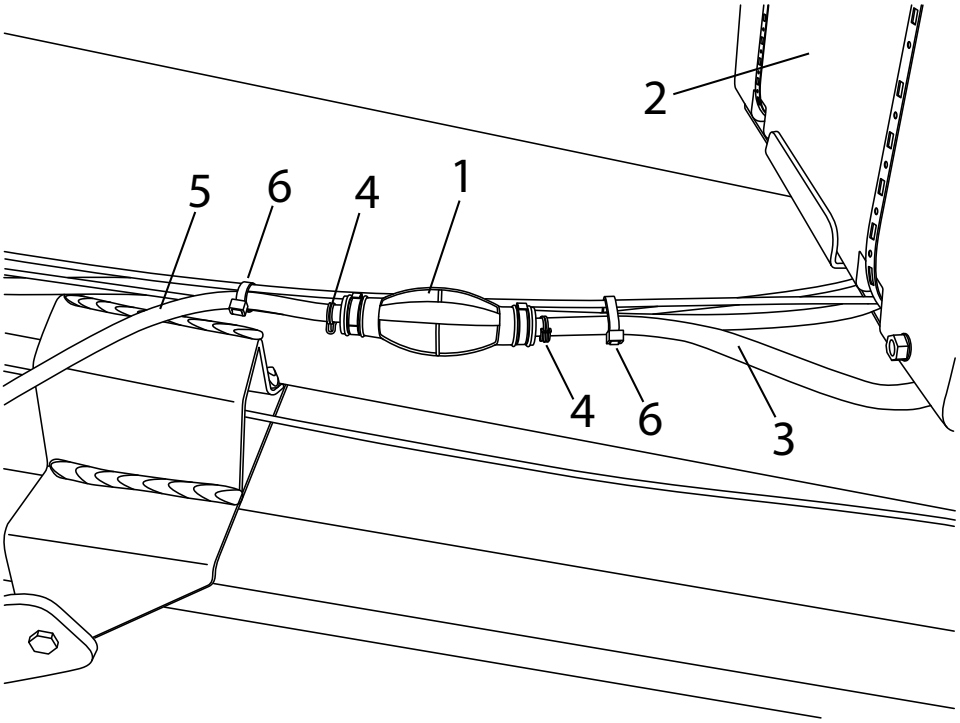

Item	Description	Item	Description
1	Primer Bulb	4	3/4" Hose clamps
2	Gas Tank	5	1/4" Fuel Hose (To Fuel Filter)
3	1/4" Fuel Hose (12")	6	Zip Tie

3. A fuel filter (Figure 105) also is required between the engine and the primer bulb. Connect the fuel filter to the primer bulb using a fuel hose with reasonable length and two clamps for each end of the

- If equipped with an EPA tank kit, a fuel demand valve is required to install with the primer bulb (refer to Figure 103). In this case, the fuel filter needs to be attached after the fuel demand valve before the engine.

Figure 105. Fuel Filter

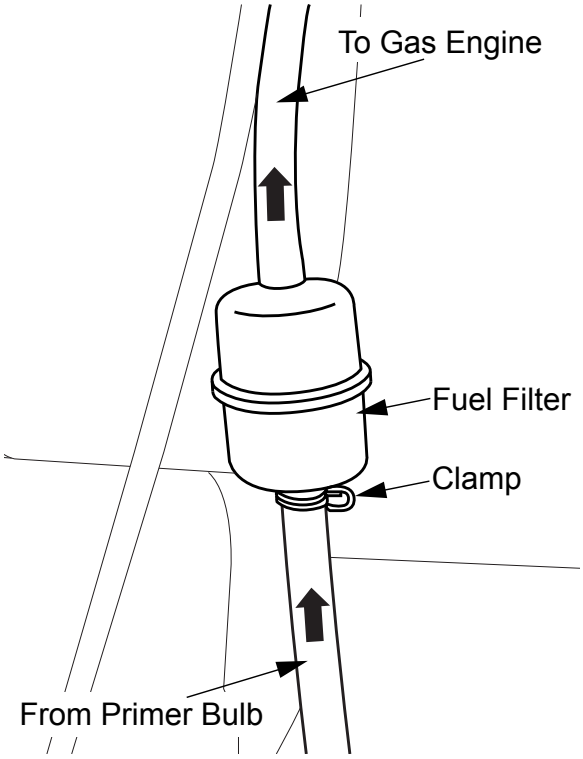

4. Secure the fuel hoses with zip ties.

Figure 106. Gas Hose Routing to Under-Mount Engine

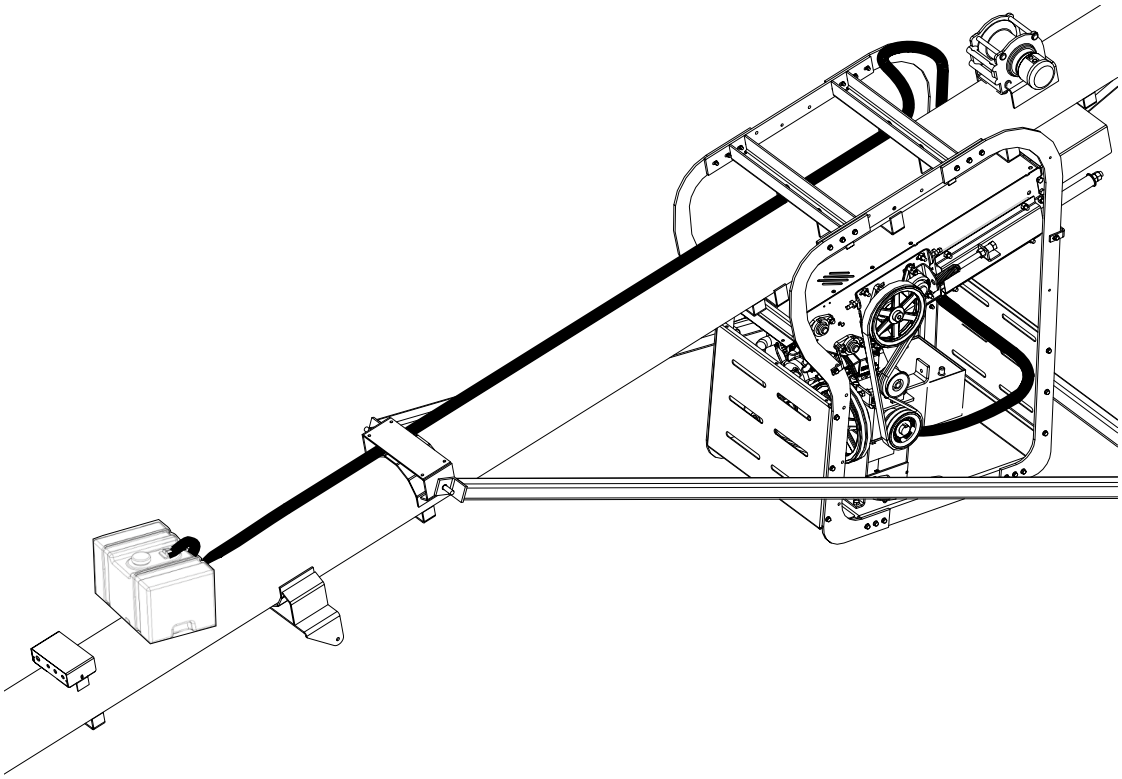

After installation check:

Note

Before checking the primer bulb, please proceed and complete all the assemblies first and after the conveyor is completely assembled, place finishing zip-ties on all fuel hoses to ensure all lines are snug in place. Also zip-tie the gearbox breather to the fuel hose above the fuel filter.

1. Prime the fuel system with the primer bulb until fuel is seen in the fuel filter.
2. Run the machine and check all connections for any leaks or loose fitting.

Important

Do not start the engine on empty fuel, before pumping the primer bulb. Otherwise you risk wearing out the battery, and may risk of engine failure.

3.35. Hydraulic Wet Kit

The hydraulic wet kit is an option for gas or electric drives.

3.35.1 Install the Hydraulic Tank Mount (for Over-Mount and Under-Mount)

➡ This procedure only applies for models with clamp-on tank mount brackets.

1. Position the mount brackets (1) just below the s-drive (see Figure 107).
2. Secure the brackets (1) to the tube using 10" x 2-1/2" u-clamps (2), 7/16" x 1-1/2" bolts (3), and 7/16" nuts (4).
3. Tighten the u-clamp until the tube begins to crimp.

Table 51. Hydraulic Tank Mount Components

Item	Description
1	Plastic Tank Side Mount Bracket
2	10" x 2-1/2" U-clamp
3	7/16" x 1-1/2" Hex Bolt GR8 Plated
4	7/16" Nylock Nut Gr8

Figure 107. Installing Hydraulic Tank Mount

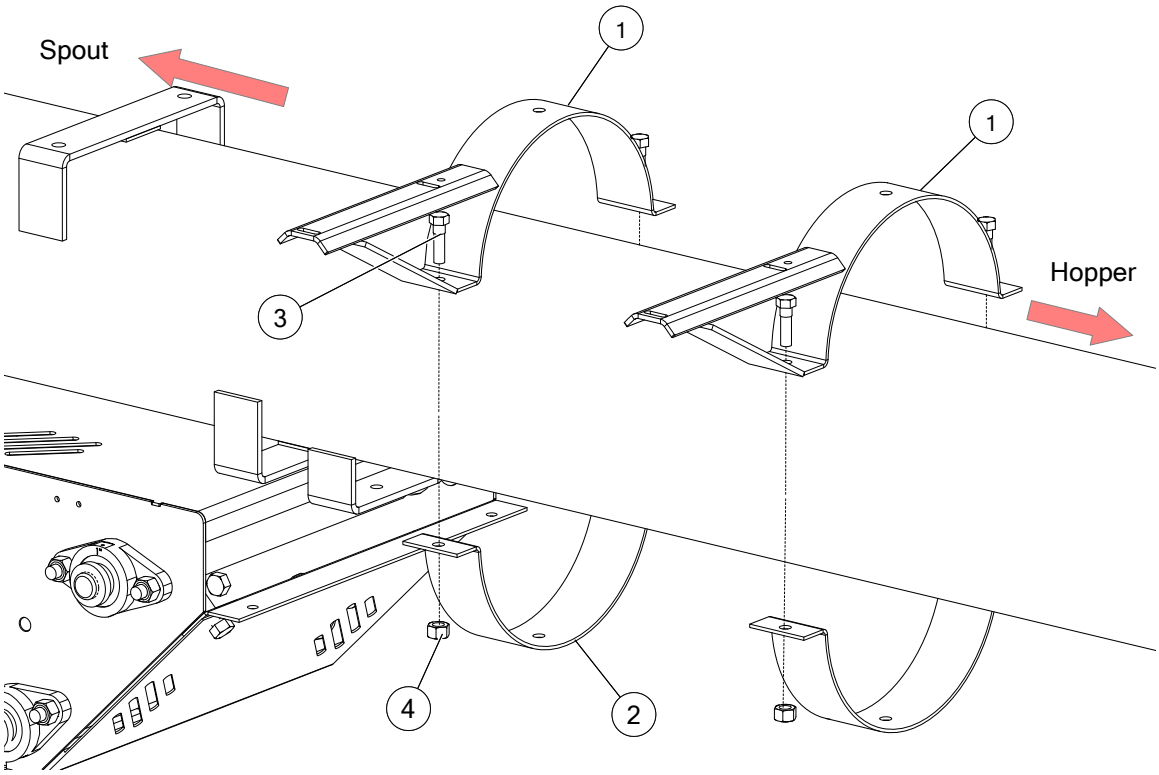

3.35.2 Install the Hydraulic Tank (for Over-Mount and Under-Mount)

1. Install the hydraulic tank (1) to the mount brackets with gear clamps (2) (see Figure 108).

   Note

   Fittings (3, 4) are factory pre-installed on the tank.

Table 52. Hydraulic Tank Components

Item	Description
1	Hydraulic Tank
2	32" Gear Clamp
3	#8 ORB x 1/2 FPT (not shown)
4	10 ORB x 3/4" Hose Barb

Figure 108. Installing the Hydraulic Tank

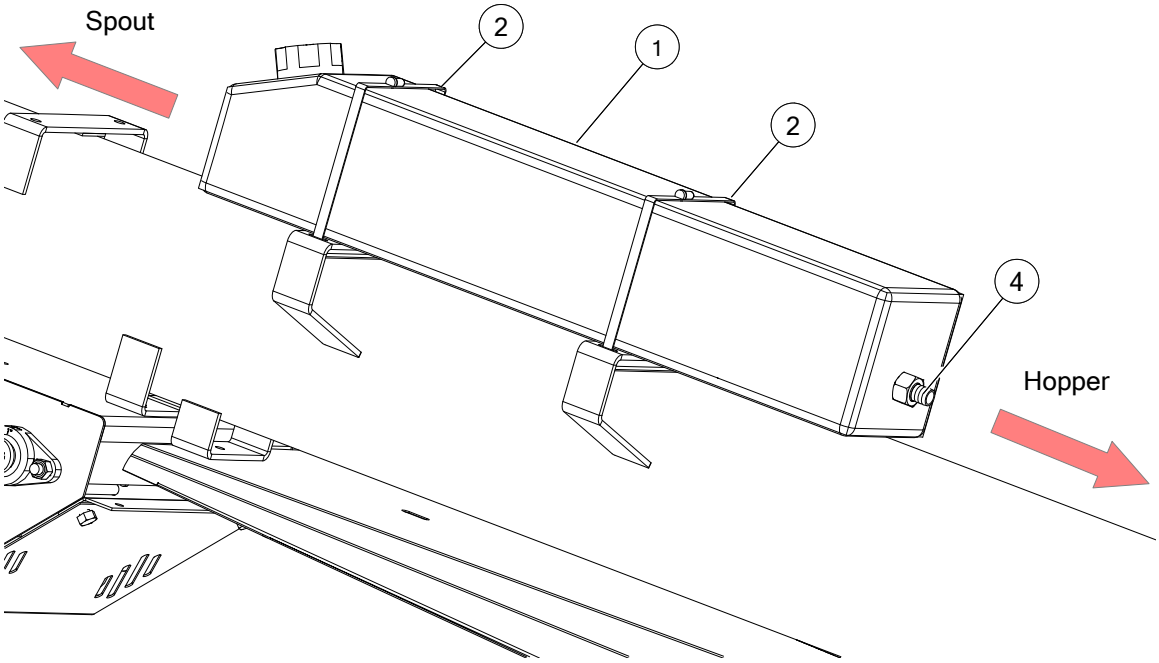

Note

The preceding figure depicts a weld-on bracket.

3.35.3 Install the Hydraulic Pump (for Over-Mount)

1. Install the fittings (5, 6) on the hydraulic pump (see Figure 109).
2. Secure the pump mount (1) and pump (2) to the slots in the motor back plate using 3/8" x 1-1/2" bolts (3) and 3/8" nuts (4). Leave the bolts loose.

Note

Make sure the orientation of the fittings and direction arrow on the pump are as shown as the pump is mounted.

Table 53. Hydraulic Pump and Fasteners

Item	Description
1	Pump Mount — Pinch Drive
2	Hydraulic Pump
3	3/8" x 1-1/2" Carriage Bolt Plated
4	3/8" Locknut
5	Hose Barb — 10 MORB x 3/4" Hose
6	Swivel — 8 ORB x 1/2" FPS

Figure 109. Installing Hydraulic Pump (Over-Mount Gas/Electric Drive)

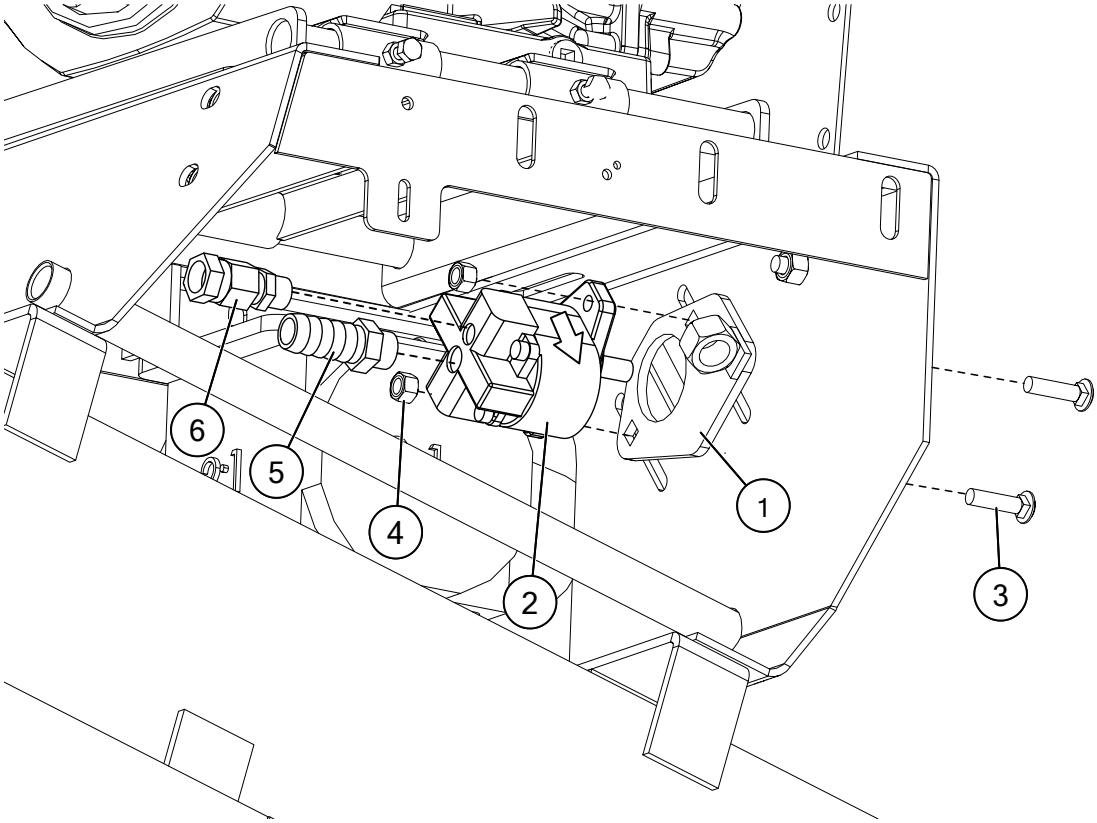

3.35.4 Install the Pivot Handle (for Over-Mount)

1. Attach the pivot handle (1) to the pivot shaft (2) using a 3/8" x 2-1/2" bolt (3), a 3/8" locknut (4), and six 3/8" washers (5) (see Figure 110).
2. Attach the 1/4" x 2-1/4" quick pin (6).
3. Thread the end of the pivot shaft (2) into the nut on the pump mount.

Table 54. Pivot Handle and Fasteners

Item	Description
1	Pivot Handle
2	Pivot Shaft
3	3/8" x 2-1/2" Hex Bolt GR8
4	3/8" Locknut
5	3/8" Flat Washer
6	1/4" x 2-1/4" Quick Pin

Figure 110. Installing Pivot Handle (Over-Mount Gas/Electric Drive)

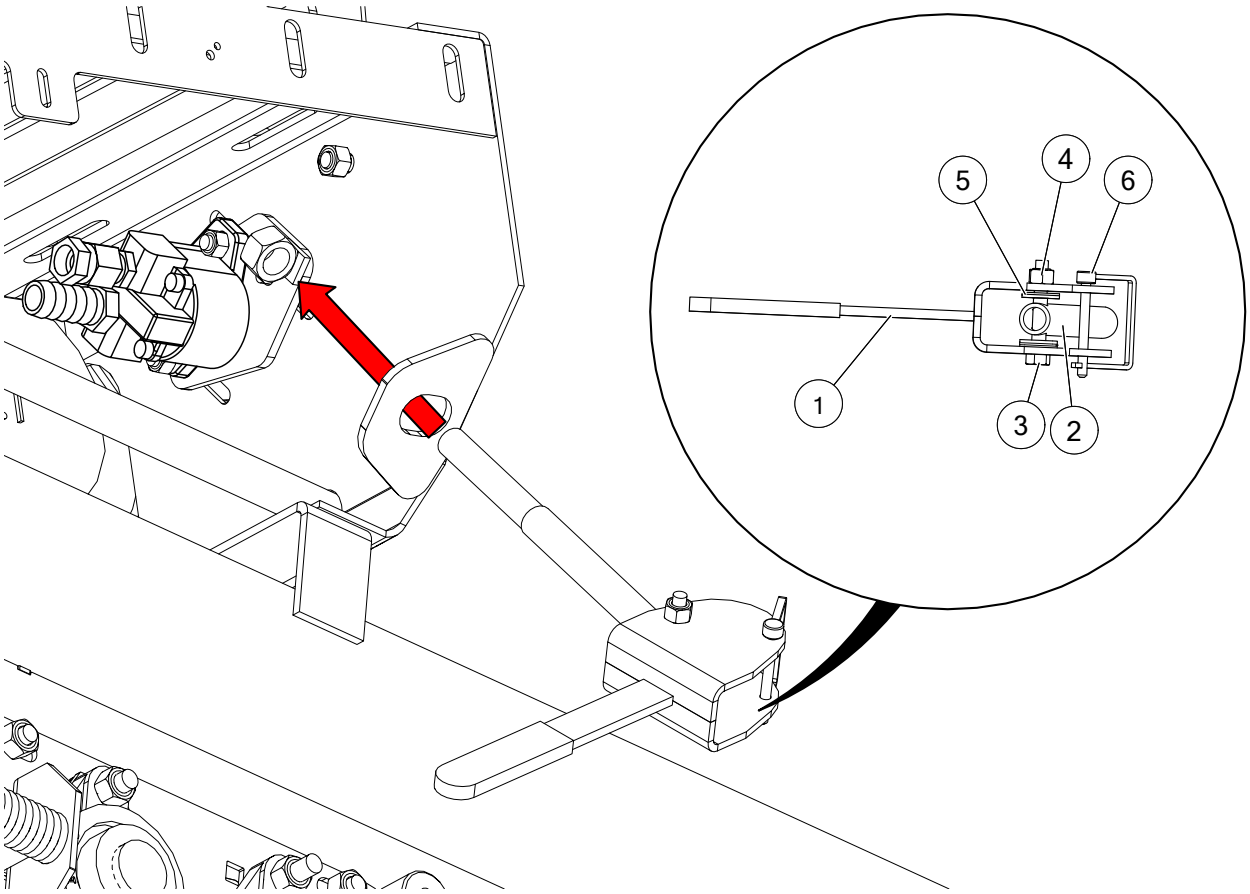

3.35.5 Install the Pulleys and Belt (for Over-Mount)

1. Install the hydraulic pump pulley (2) onto the hydraulic pump (see Figure 111).

   Note

   The key for the pump pulley is factory pre-installed on the hydraulic pump shaft.

2. Install the hydraulic drive pulley (1) onto the engine shaft with a 1/4" x 3-1/4" square key (4).
3. Align the pulleys using a straight edge.
4. Tighten hydraulic pump base bolts and pulley set screws.

   Important

   Once all bolts and set screws are tightened, re-check alignment. Proper alignment will prolong belt life.

5. Install the belt (3).
6. Set the belt tension by adjusting threaded pivot shaft connected to the pivot handle.

   Note

   Belts should deflect 1/2" (1.27 cm) to 3/4" (1.91 cm) when pushed on with a 5 lb (22.2 N) force.

Table 55. Pulleys and Belt

Item	Description
1	Pulley 4-1/2" x 1-1/8"
2	Pulley 4-1/2" x 1/2"
3	Belt B35
4	1/4" x 3-1/4" Square Key

Figure 111. Installing Pulleys and Belt (Over-Mount Gas/Electric Drive)

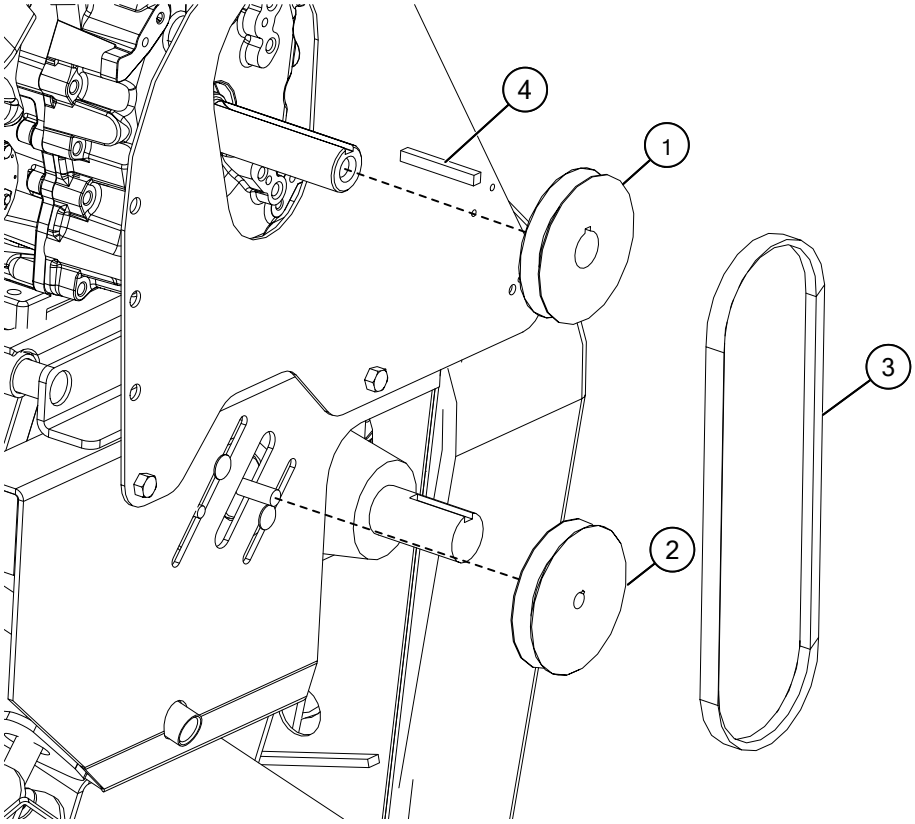

3.35.6 Attach the Hydraulic Hoses (for Over-Mount and Under-Mount)

1. Connect the hoses (3, 5, and 6) to the hydraulic pump (2), wheel move spool valve (not shown) and hydraulic oil tank (1) (see Figure 112 or Figure 113).
2. Add hydraulic fluid up to approximately 2" [51 mm] from the tank opening. Use the hydraulic fluid noted in the Specifications chapter.
3. Replace tank cap.
4. Test the function of the hydraulic system.
5. Refill hydraulic fluid up to approximately 2" [51 mm] from the tank opening.
6. Replace tank cap.
7. After the conveyor is completely assembled, place finishing zip-ties on all hydraulic hoses to ensure all lines are snug in place.

Table 56. Hydraulic Hoses

Item	Description
1	Hydraulic Tank
2	Hydraulic Pump
3	3/4" Hose (tank to pump)
4	3/4" Hose Clamp
5	1/2" Hose (pump to valve)
6	1/2" Hose (valve to tank)

Figure 112. Hydraulic Hose Routing for Over-Mount Gas/Electric Drive

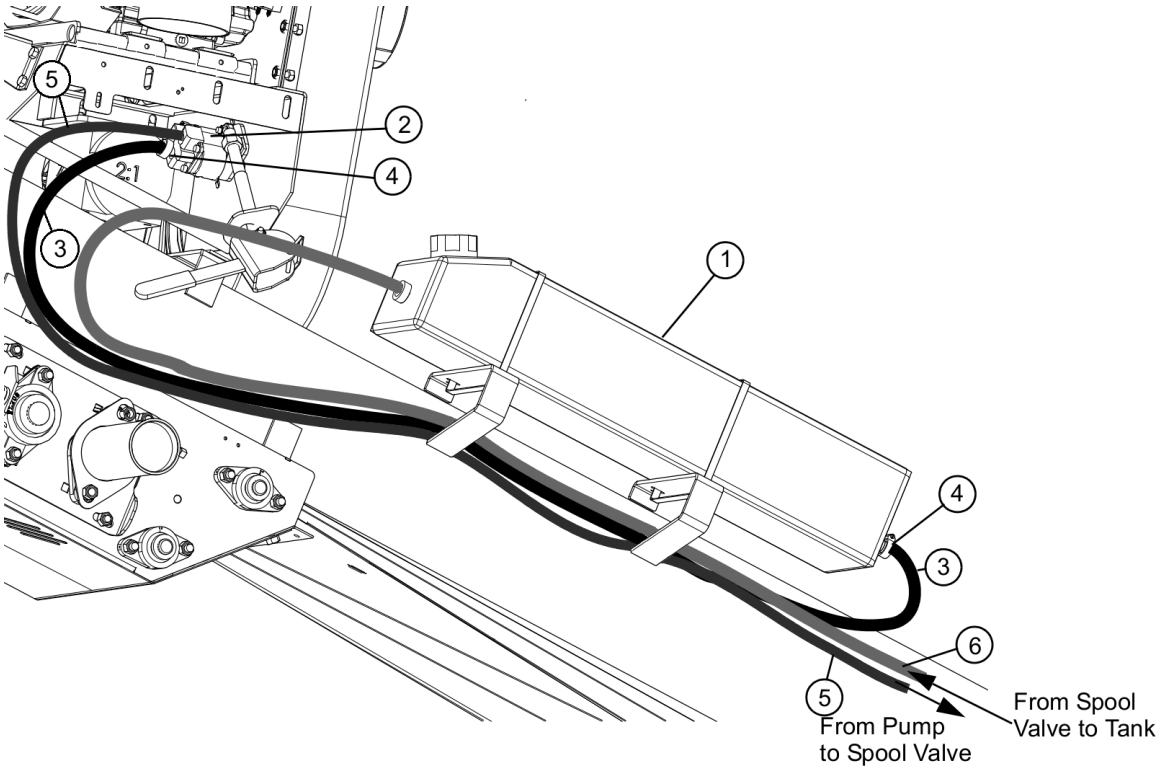

Figure 113. Hydraulic Hose Routing for Under-Mount Gas Drive

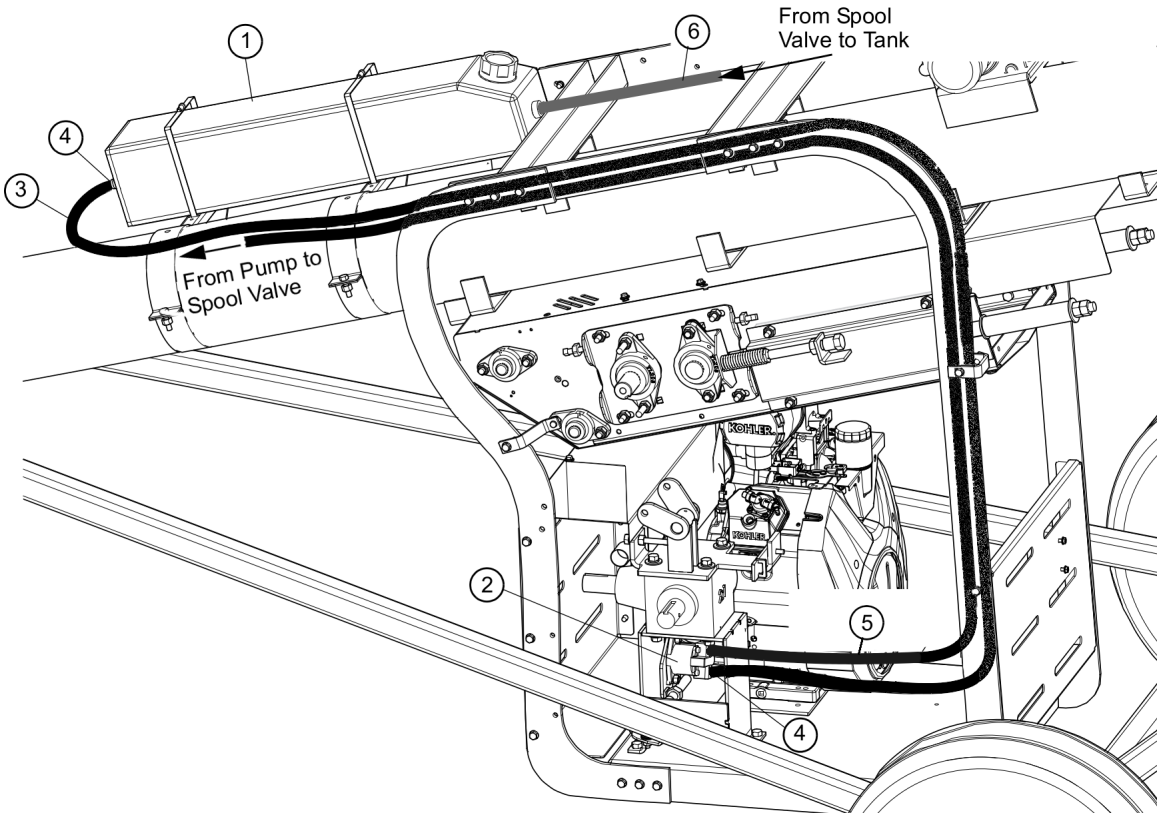

Note

The hoses are shown in Figure 113 on the outside of the under-mount arms for clarity, but they are actually routed on the inside of the mount arms.

3.36. Install the Shaft Guard

1. Mount the shaft guard (2) over the roller shaft and onto the flange bearing carriage bolts (see Figure 114).
2. Secure the shaft guard in place using two locknuts (3) and two flat washers (4).

Note

When mounting onto a 15/16" bearing (FL210), use 5/8" locknuts and flat washers.
When mounting onto a 1-1/4" bearing (FL206) or 1-1/2" bearing (FL208), use ½" locknuts and flat washers.

Figure 114. Installing Shaft Guard

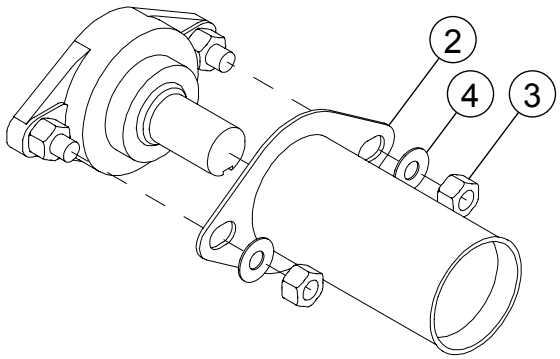

3.37. Install the Inspection Step

The inspection step is used on conveyors with a gas engine or electric motor.

1. Position the inspection step adjacent to the portion of the axle frame with anti-slip tape (and below the gas engine or electric motor) as shown in Figure 115.
2. Attach 5/8" x 2-1/2" u-bolts (2) from the underside of the axle frame and through the inspection step (1) with 5/8" nylock nuts (3) and 5/8" flat washers (4) (see Figure 116).

Table 57. Inspection Step Components

ITEM	DESCRIPTION	QTY
1	Inspection Step	2
2	U-Bolt 5/8" x 2-1/2"	4
3	5/8" Nylon Locknut	8
4	5/8" Flat Washer	8

Figure 115. Anti-Skid Grit Strip

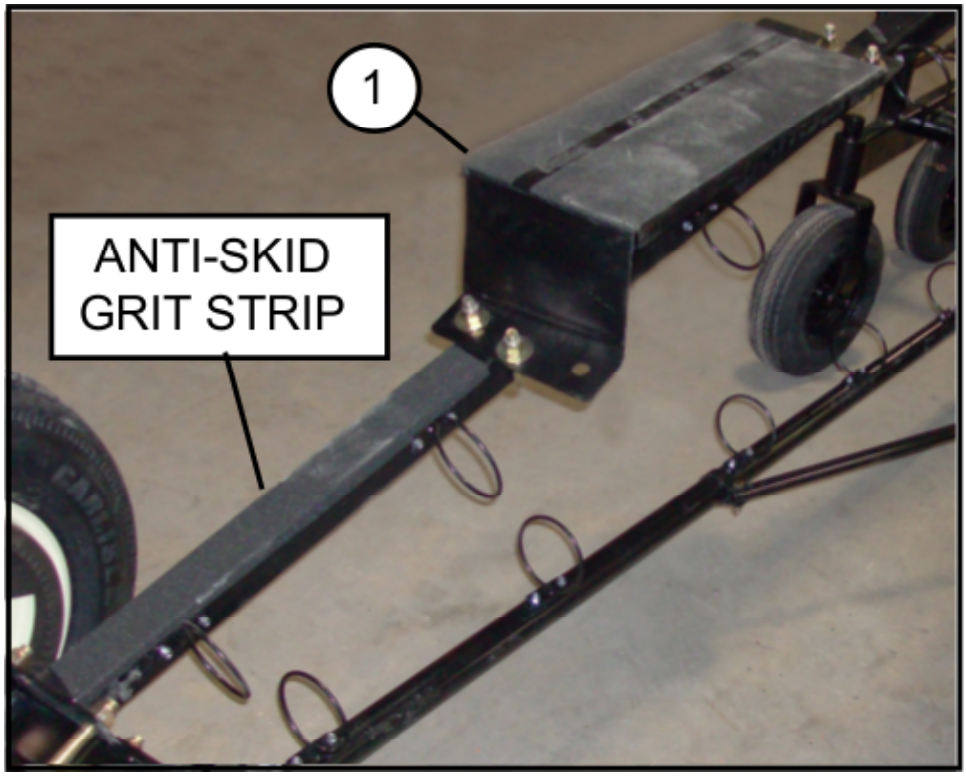

Figure 116. Installing Inspection Step

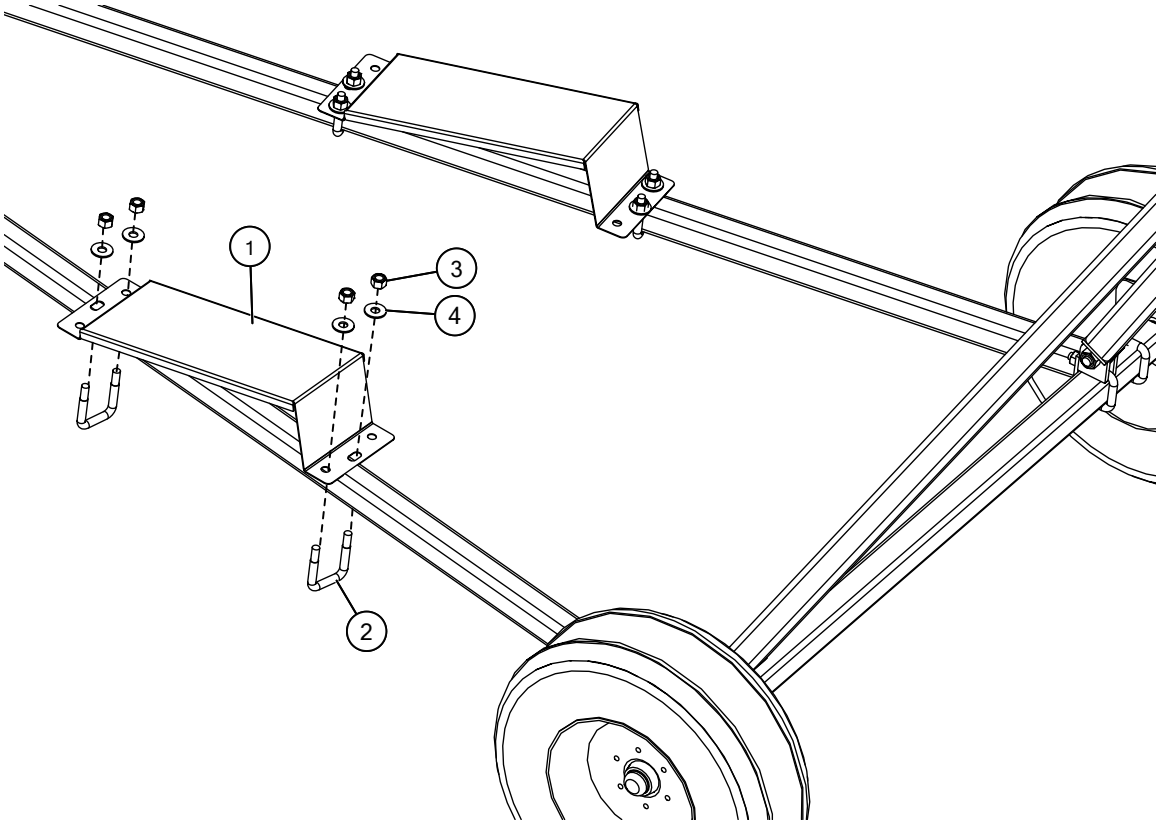

3.38. Install the Manual Container

1. Position the manual container (1) on the axle arm.
2. Depending on your type of container, either:
   a. secure with two gear clamps (2) (see Figure 117), or
   b. secure with two self-tapping screws (3) (see Figure 118).

Figure 117. Clamp-on Manual Container

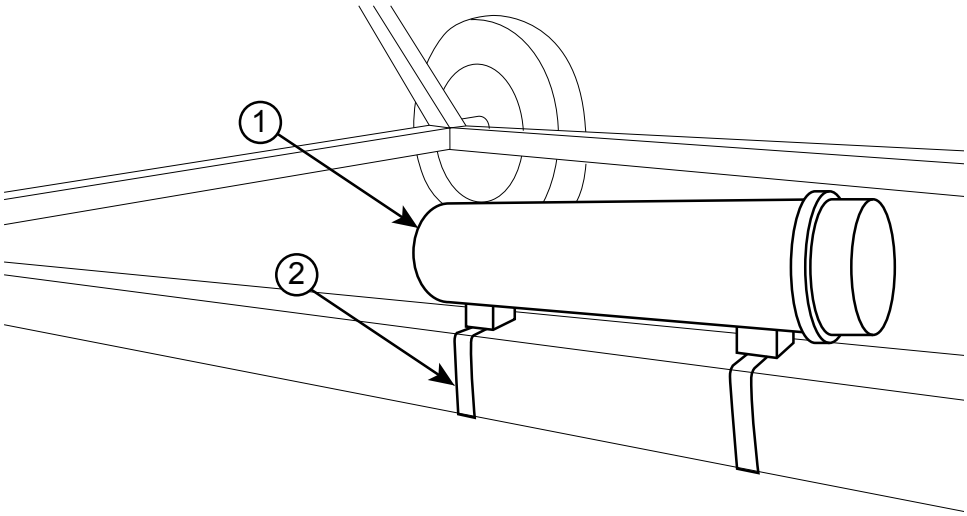

Figure 118. Screw-on Manual Container

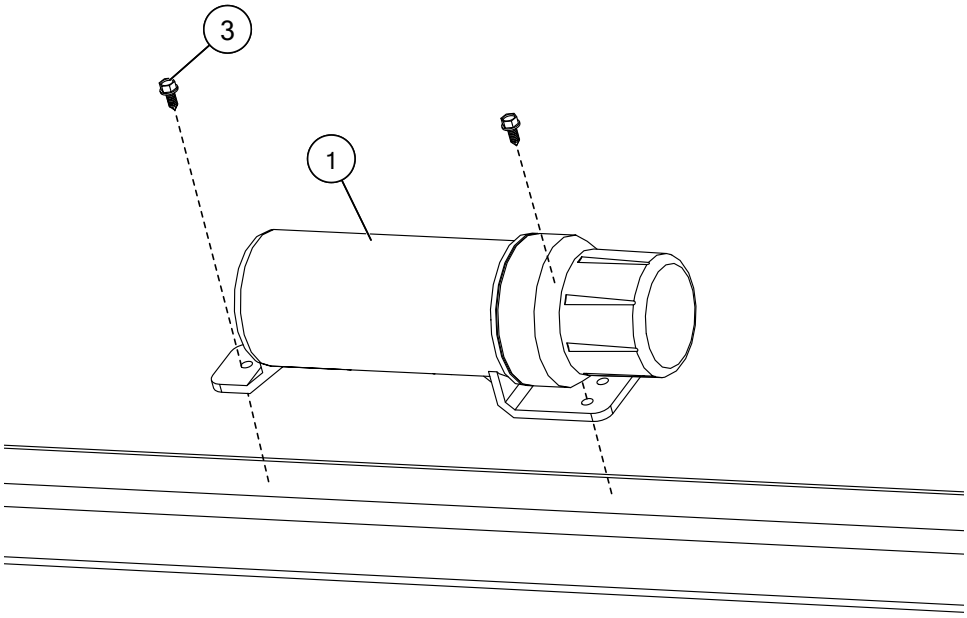

Item	Description
1	Manual Container
2	Gear Clamps
3	Self-Tapping Screw #14 x 5/8"

3.39. Attach the Jack

1. Insert the jack (1) into the jack stub (located on the conveyor hitch) (see Figure 119).
2. Secure the jack in place with the pin (2) provided.

Figure 119. Attaching the Jack

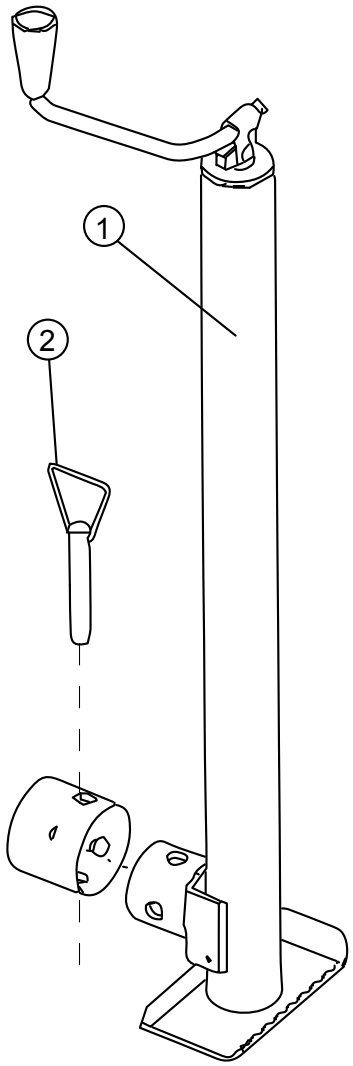

Ref	Description
1	Jack
2	Pin

4. Specifications

Specifications

Table 58. CX2 Field Loader (Model 1539 and 1549)

MODEL	1539 GAS/ELECTRIC	1539 SHORT HOPPER	1549 GAS/ELECTRIC
DIMENSIONS			
Conveyor Tube Diameter	10"		
Belt Length	87'2"	84'9"	107'2"
OTHER			
Electric Drive (HP)	10	N/A	15
Gas Drive (HP)	27	27	32
Gear Box Oil Type	SAE Approved 90W or equivalent		
Hydraulic Oil	ISO 32 Hydraulic Oil or equivalent		
Hitch Pin Size (Min. Diameter x Length)	1/2" x 3"		
Required Tractor Hydraulic Output	16–12 gal/min		

5. Appendix

5.1. Bolt Torque

Table 59 gives the correct torque values for various hardware. Tighten all bolts to the torque specified, unless otherwise noted. Check tightness periodically, using Table 59 as a guide. Replace the hardware with the same strength bolt, contact AGI if you are unsure.

Table 59. Recommended Bolt Torque[1]

Size	Dry or Lubricated	Threads per inch (Course/ Fine)	Area of Bolt (sq in.)		Recommended Torque (ft-lb)							
					Grade 2		Grade 5		Grade 8		8.8 S/S	
			Coarse	Fine	Coarse	Fine	Coarse	Fine	Coarse	Fine	Coarse	Fine
1/4"	Dry	20/28	0.0318	0.0364	5.5	6.3	8	10	12	14	6.3	7.8
	Lubricated				6.3	4.7	6.3	7.2	9	10	-	-
5/16"	Dry	18/24	0.0524	0.058	11	12	17	19	24	27	11	11.8
	Lubricated				8	9	13	14	18	20	-	-
3/8"	Dry	16/24	0.0775	0.0878	20	23	30	35	45	50	20	22
	Lubricated				15	17	23	25	35	35	-	-
7/16"	Dry	14/20	0.1063	0.1187	32	36	50	55	70	80	31	33
	Lubricated				24	27	35	40	50	80	-	-
1/2"	Dry	13/20	0.1419	0.1599	50	55	75	85	110	120	43	45
	Lubricated				35	40	55	65	80	90	-	-
9/16"	Dry	12/18	0.182	0.203	70	80	110	120	150	170	57	63
	Lubricated				55	60	80	90	110	130	-	-
5/8"	Dry	11/18	0.226	0.256	100	110	150	170	210	240	93	104
	Lubricated				75	85	110	130	160	180	-	-
3/4"	Dry	10/16	0.334	0.373	175	200	260	300	380	420	128	124
	Lubricated				130	140	200	220	280	310	-	-
7/8"	Dry	9/14	0.462	0.508	170	180	430	470	600	670	194	193
	Lubricated				125	140	320	350	180	180	-	-
1"	Dry	8/14	0.606	0.679	250	280	640	720	910	1020	287	289
	Lubricated				190	210	480	540	680	760	-	-
1-1/8"	Dry	7/12	0.763	0.856	350	400	790	890	1290	1440	288	290
	Lubricated				270	300	590	670	970	1080	-	-
1-1/4"	Dry	7/12	0.989	1.073	500	550	1120	1240	1820	2010	289	291
	Lubricated				380	420	840	930	1360	1510	-	-
1-1/2"	Dry	6/12	1.405	1.581	870	960	1950	2200	3160	3560	-	-
	Lubricated				650	730	1460	1640	2370	2670	-	-

1. Torque value for bolts and cap screws are identified by their head markings. Established at 75% of yield strength of bolt given the cross-sectional area.

Note

Torque figures in table are valid for non-greased or non-oiled threads and head unless otherwise specified. Therefore, do not grease or oil bolts or cap screws unless otherwise specified in this manual. When using locking elements, increase torque values by 5%.

5.2. Fittings Torque Values

These specifications are for carbon steel. With Zinc plating always lubricate threads and seals. For stainless steel, use the high value of the torque range of steel. For brass, use 70% of the torque value of steel. For mixed metals, use the torque of the lower of the two metals. Torque range is normally calculated +/- 10%.

Table 60. Pipe Rigid - Tapered Pipe Threads (NPTF, N/NF) - Carbon Steel

Pipe Size	Turns-from-finger	Max ft-lbs	Max N-m
1/8" (-2)	3/4 - 1 3/4	12	16
1/4" (-4)	3/4 - 1 3/4	25	34
3/8" (-6)	3/4 - 1 3/4	40	54
1/2" (-8)	1/2 - 1 1/2	54	73
3/4" (-12)	1/2 - 1 1/2	78	106
1" (-16)	1/2 - 1 1/2	112	152
1 1/4" (-20)	1/2 - 1 1/2	154	209
1 1/2" (-24)	1/2 - 1 1/2	211	286
2" (-32)	1/2 - 1 1/2	300	407

Table 61. Pipe Swivel - Straight Pipe Threads (NPSM, N/NFS) - Carbon Steel

Pipe Size	Max ft-lbs	Max N-m
1/8" (-2)	12	16
1/4" (-4)	25	3
3/8" (-6)	40	54
1/2" (-8)	54	73
3/4" (-12)	78	106
1" (-16)	112	152
1 1/4" (-20)	154	209
1 1/2" (-24)	211	286
2" (-32)	300	407
Note: seals on an internal male 30° seat		

Table 62. Stud End O-Ring Boss (ORB) SAE (U/UF)

		Carbon Steel	
Tube Size	**Thread UNF-2A**	**Max ft-lbs**	**Max N-m**
-2	5/16" - 24	6-7	8-9
-3	3/8" - 24	8-9	11-12
-4	7/16" - 20	13-15	18-20

Table 62 Stud End O-Ring Boss (ORB) SAE (U/UF) (continued)

		Carbon Steel	
Tube Size	**Thread UNF-2A**	**Max ft-lbs**	**Max N-m**
-5	1/2" - 20	17-19	23-26
-6	9/16" - 18	22-24	29-33
-8	3/4" - 16	40-43	49-53
-10	7/8" - 14	43-48	59-64
-12	1 1'16" - 12	68-75	93-102
-14	1 3/16" - 12	90-99	122-134
-16	1 5/16" - 12	112-123	151-166
-20	1 5/8" - 12	146-161	198-218
-24	1 7/8" - 12	154-170	209-231

Table 63. JIC 37° Flare Tube Fitting (J/JFS)

Tube Size	Thread UNF-2A	Torque ft-lbs	Torque N-m
-2	5/16 - 24	6-7	8-9
-3	3/8 - 24	8-9	11-12
-4	7/16 - 20	11-12	15-16
-5	1/2 - 20	14-15	19-21
-6	9/16 - 18	18-20	24-28
-8	3/4 - 16	36-39	49-53
-10	7/8 - 14	57-63	77-85
-12	1 1/16 - 12	79-88	107-119
-14	1 3/16 - 12	94-103	127-140
-16	1 5/16 - 12	108-113	147-154
-20	1 5/8 - 12	127-133	172-181
-24	1 7/8 - 12	158-167	215-226
-32	2 1/2 - 12	245-258	332-350

Batco | Westfield
201 Industrial Drive, Swift Current
Saskatchewan S9H 5R4, CANADA
Phone: (877) 667-7421 (Canada & USA)
or (306) 773-7779
Fax: (306) 778-2524

Email: info@batcomfg.com
Website: www.batcomfg.com

Printed in Canada

If you have any comments or questions on this manual, or find an error, email us at comments@aggrowth.com.
Please include the part number listed on the cover page in your message.