STX2 & XTA Series

Portable Grain Auger Assembly Manual

This manual applies to:

Westfield STX2, AGI XTA, Hutchinson STX2, Mayrath STX2:

10-61

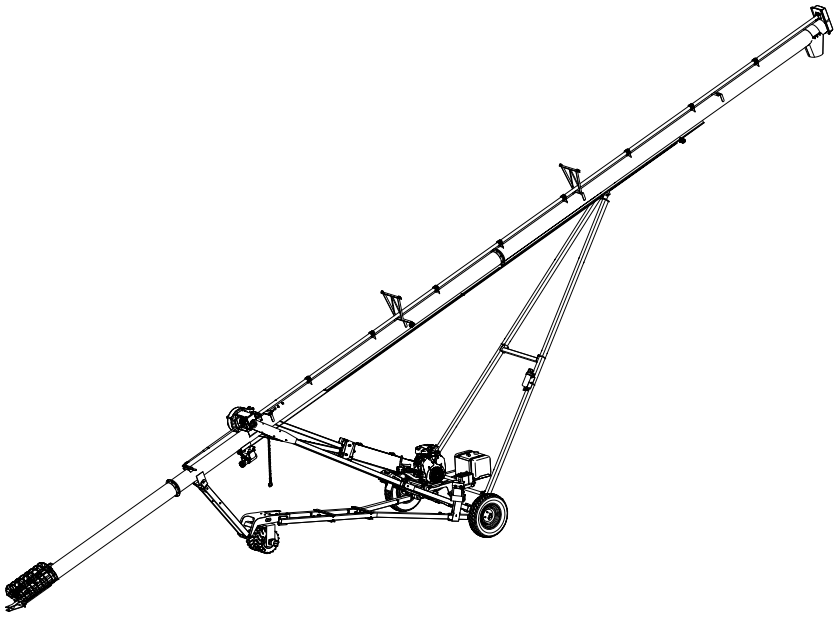

Read this manual before using product. Failure to follow instructions and safety precautions can result in serious injury, death, or property damage. Keep manual for future reference.

Part Number: 31136 R1

Revised: December 2021

Original Instructions

New in this Manual

The following changes have been made in this revision of the manual:

Description	Section
Added track holes	Section 4.7 – Install the Track Stops on page 26

CONTENTS

1. Introduction 5

2. Safety 6
2.1 Safety Alert Symbol and Signal Words 6
2.2 General Safety Information 6
2.3 Rotating Flighting Safety 7
2.4 Rotating Parts Safety 7
2.5 Hydraulic Winch Safety 7
2.6 Drives and Lockout Safety 8
2.6.1 Gas Engine Safety 8
2.6.2 Electric Motor Safety 9
2.6.3 Hydraulic Power Safety 10
2.6.4 Tire Safety 11
2.6.5 Battery Safety 11
2.6.6 Personal Protective Equipment 12
2.6.7 Safety Equipment 12
2.7 Safety Decals 13
2.7.1 Decal Installation/Replacement 13
2.7.2 Safety Decal Locations and Details 13

3. Features 22

4. Assembly 23
4.1 Assembly Safety 23
4.2 Check Shipment 23
4.3 Before You Begin 23
4.4 Hydraulic Fittings and Bolt Tightening 24
4.5 Brand and Model Decal Placement 24
4.6 Assemble Tube & Flighting 25
4.7 Install the Track Stops 26
4.8 Install the Driveshaft 27
4.8.1 Driveshaft Layout Drawing 27
4.8.2 Assemble the Driveshaft 27
4.9 Install the Spout 30
4.10 Add Grease to Head Cover 31
4.11 Install the Intake Cage 32
4.12 Install Truss Tower and Cable 33
4.13 Attach Lower Frame to Tube 35
4.14 Attach Lower Frame to Axle 37
4.15 Attach Upper Frame to Tube 38
4.16 Attach Upper Frame to Axle 38
4.17 Install the Over-Center Drive 40
4.18 Adjust the Pinion Gear 41
4.19 Install the Reversible Gearbox 42
4.20 Install the Motor Mount 44
4.21 Install the Gas Drive 46
4.21.1 Install the Battery and Fuel Tank 46
4.21.2 Install the Engine Slider Mount Bracket 47
4.21.3 Install the Hydraulic Pump 48
4.21.4 Install the Electric Clutch 49

4.21.5 Install the Motor 50
4.21.6 Install the Guard Assembly 51
4.21.7 Install the Belt 51
4.21.8 Install the Engine Pulley Guard 53
4.21.9 Tension the Belt 54
4.21.10 Install Fully Enclosed Guarding 55
4.21.11 Wire the Electric Clutch 57
4.22 Install the Lift Cable 58
4.23 Install the Hydraulic Winch 59
4.24 Connect the Lift Cable 59
4.25 Install the Hydraulic Oil Tank 60
4.26 Install the Hydraulic Filter 62
4.27 Install the Hydraulic Manifold 63
4.28 Install the Undercarriage 63
4.29 Install the Hydraulic Adapters 69
4.30 Attach the Transport Chain 73
4.31 Attach the Hydraulic Hoses 74
4.32 Install the Manual Holder 79
4.33 Install the Hitch 80
4.34 Install the Work Lights 80

5. Specifications 82

6. Appendix 83
6.1 Bolt Torque 83
6.2 Fittings Torque Values 84

1. Introduction

Before assembling, please read this manual. Familiarize yourself with the process and the necessary precautions for efficient and safe assembly of this AGI Portable Grain Auger.

Everyone present at the assembly site is required to be familiar with all safety precautions.

Keep this manual available for frequent reference and review it with new personnel. Call your local distributor or dealer if you need assistance or additional information.

2. Safety

2.1. Safety Alert Symbol and Signal Words

This safety alert symbol indicates important safety messages in this manual. When you see this symbol, be alert to the possibility of injury or death, carefully read the message that follows, and inform others.

Signal Words: Note the use of the signal words **DANGER**, **WARNING**, **CAUTION**, and **NOTICE** with the safety messages. The appropriate signal word for each message has been selected using the definitions below as a guideline.

DANGER Indicates an imminently hazardous situation that, if not avoided, will result in serious injury or death.

WARNING Indicates a hazardous situation that, if not avoided, could result in serious injury or death.

CAUTION Indicates a hazardous situation that, if not avoided, may result in minor or moderate injury.

NOTICE Indicates a potentially hazardous situation that, if not avoided, may result in property damage.

2.2. General Safety Information

Read and understand all safety instructions, safety decals, and manuals and follow them when assembling the equipment.

- Only experienced personnel who are familiar with this type of assembly and installation should perform this work. Untrained assemblers/installers expose themselves and bystanders to possible serious injury or death.
- Do not modify the auger in any way or deviate from the instructions in this manual without written permission from the manufacturer. Unauthorized modification or methods may impair the function and/or safety. Any unauthorized modification will void the warranty.
- Follow a health and safety program for your worksite. Contact your local occupational health and safety organization for information.
- Contact your local representative or AGI if you need assistance or additional information.
- Always follow applicable local codes and regulations.

2.3. Rotating Flighting Safety

DANGER

- KEEP AWAY from rotating flighting.
- DO NOT remove or modify flighting guards, doors, or covers. Keep in good working order. Have replaced if damaged.
- DO NOT operate the auger without all guards, doors, and covers in place.
- NEVER touch the flighting. Use a stick or other tool to remove an obstruction or clean out.
- Shut off and lock out power to adjust, service, or clean.

2.4. Rotating Parts Safety

WARNING

- Keep body, hair, and clothing away from rotating pulleys, belts, chains, and sprockets.
- Do not operate with any guard removed or modified. Keep guards in good working order.
- Shut off and lock out power source before inspecting or servicing machine.

2.5. Hydraulic Winch Safety

WARNING **When Equipped:**

- Keep away from rotating cable drum and winch cable. Do not touch or grab cable while winch is being operated or use hands to guide the cable.
- Inspect cable and cable clamps before using hydraulic winch. Replace cable if frayed or damaged. Tighten cable clamps if necessary.
- Check the cable anchor on the winch drum is tight.
- Confirm hydraulic hoses are in good condition.
- Do not continue to supply power to hydraulic winch after the auger has reached full up position.
- Do not disconnect hydraulic quick couplers when lines are pressurized.
- Make sure lift cable is seated in cable pulley.
- Always keep a minimum of 3 cable wraps on the cable drum.

2.6. Drives and Lockout Safety

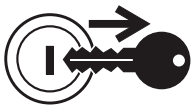

Inspect the power source(s) before using and know how to shut down in an emergency. Whenever you service or adjust your equipment, make sure you shut down the power source and unplug or remove the key (as applicable) to prevent inadvertent start-up and hazardous energy release. Know the procedure(s) that applies to your equipment from the following power source(s). Ensure that all personnel are clear before turning on power to equipment.

2.6.1 Gas Engine Safety

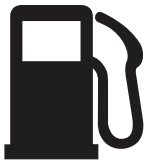

⚠ WARNING **Power Source**

- Keep guards in place and secure.
- Properly ventilate surrounding area.
- Never fill the fuel tank with the engine running, while smoking, or near an open flame. Always shut down and allow engine to cool before filling with fuel.
- Never overfill the tank or spill fuel. If fuel is spilled, clean it up immediately.
- Be sure to use the correct type and grade of fuel. Ground the fuel funnel or nozzle against the filler neck to prevent sparks that could ignite fuel vapors.
- Be sure to replace the fuel fill cap when you are done.

Lockout

- For engines with an electric start, remove the ignition key, the spark plug wire, or the spark plug.
- For engines with a rope or crank start, remove the spark plug wire or the spark plug.

2.6.2 Electric Motor Safety

⚠ WARNING **Power Source**

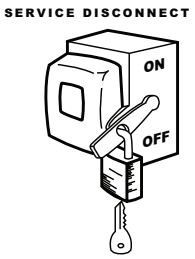

- Electric motors and controls shall be installed and serviced by a qualified electrician and must meet all local codes and standards.
- Use a magnetic starter to protect the electric motor.
- You must have a manual reset button.
- Reset and motor starting controls must be located so that the operator has full view of the entire operation.
- Locate main power disconnect switch within reach from ground level to permit ready access in case of an emergency.
- Motor must be properly grounded.
- Ensure electrical wiring and cords remain in good condition; replace if necessary.

Lockout

- The main power disconnect switch should be in the locked position during shutdown or whenever maintenance is performed.
- If reset is required, disconnect all power before resetting motor.

2.6.3 Hydraulic Power Safety

WARNING **Power Source**

- Refer to the rules and regulations applicable to the power source operating your hydraulic drive.
- Do not connect or disconnect hydraulic lines while system is under pressure.
- Keep all hydraulic lines away from moving parts and pinch points.
- Escaping hydraulic fluid under pressure will cause serious injury if it penetrates the skin surface (serious infection or toxic reaction can develop). See a doctor immediately if injured.
- Use metal or wood as a backstop when searching for hydraulic leaks and wear proper hand and eye protection.
- Check all hydraulic components are tight and in good condition. Replace any worn, cut, abraded, flattened, or crimped hoses.
- Clean the connections before connecting to equipment.
- Do not attempt any makeshift repairs to the hydraulic fittings or hoses with tape, clamps, or adhesive. The hydraulic system operates under extremely high pressure; such repairs will fail suddenly and create a hazardous and unsafe condition.

Lockout

- Always place all hydraulic controls in neutral and relieve system pressure before disconnecting or working on hydraulic system.

2.6.4 Tire Safety

⚠ WARNING Failure to follow proper procedures when mounting a tire on a wheel or rim can produce an explosion that may result in serious injury or death.

- DO NOT attempt to mount a tire unless you have the proper equipment and experience to do the job.
- Have a qualified tire dealer or repair service perform required tire maintenance.
- When replacing worn tires, make sure they meet the original tire specifications. Never undersize the replacement tire.
- DO NOT weld to the tire rim with the tire mounted on the rim. This action may cause an explosion which could result in serious injury or death.
- Inflate tires to the manufacturer's recommended pressure.
- Tires should not be operated at speeds higher than their rated speed.
- Keep wheel lug nuts tightened to manufacturer's recommendations.
- Never reinflate a tire that has been run flat or seriously under-inflated without removing the tire from the wheel. Have the tire and wheel closely inspected for damage before remounting.

2.6.5 Battery Safety

⚠ WARNING

- Wear safety glasses and protective gloves when working near batteries.
- Make certain the battery or terminal covers are in place and in good working order.
- Keep all sparks and flames away from batteries; gas given off by electrolyte is explosive.
- Avoid contact with battery electrolyte. Wash off any spilled electrolyte immediately.
- Do not tip batteries more than 45° to avoid electrolyte loss.
- To avoid injury from sparks or short circuits, disconnect battery ground cable before servicing any part of an electrical system.

2.6.6 Personal Protective Equipment

The following Personal Protective Equipment (PPE) should be worn when assembling the equipment.

Safety Glasses

- Wear safety glasses at all times to protect eyes from debris.

Coveralls

- Wear coveralls to protect skin.

Hard Hat

- Wear a hard hat to help protect your head.

Steel-Toe Boots

- Wear steel-toe boots to protect feet from falling debris.

Work Gloves

- Wear work gloves to protect your hands from sharp and rough edges.

2.6.7 Safety Equipment

The following safety equipment should be kept on site.

Fire Extinguisher

- Provide a fire extinguisher for use in case of an accident. Store in a highly visible and accessible place.

First-Aid Kit

- Have a properly-stocked first-aid kit available for use should the need arise, and know how to use it.

2.7. Safety Decals

- Keep safety decals clean and legible at all times.
- Replace safety decals that are missing or have become illegible. See decal location figures that follow.
- Replaced parts must display the same decal(s) as the original part.
- Replacement safety decals are available **free of charge** from your distributor, dealer, or factory as applicable.

2.7.1 Decal Installation/Replacement

1. Decal area must be clean and dry, with a temperature above 50°F (10°C).
2. Decide on the exact position before you remove the backing paper.
3. Align the decal over the specified area and carefully press the small portion with the exposed sticky backing in place.
4. Slowly peel back the remaining paper and carefully smooth the remaining portion of the decal in place.
5. Small air pockets can be pierced with a pin and smoothed out using the decal backing paper.

2.7.2 Safety Decal Locations and Details

Replicas of the safety decals that are attached to the auger and their messages are shown in the figure(s) that follow. Safe operation and use of the auger requires that you familiarize yourself with the various safety decals and the areas or particular functions that the decals apply to, as well as the safety precautions that must be taken to avoid serious injury, death, or damage.

Figure 1. Safety Decal Locations

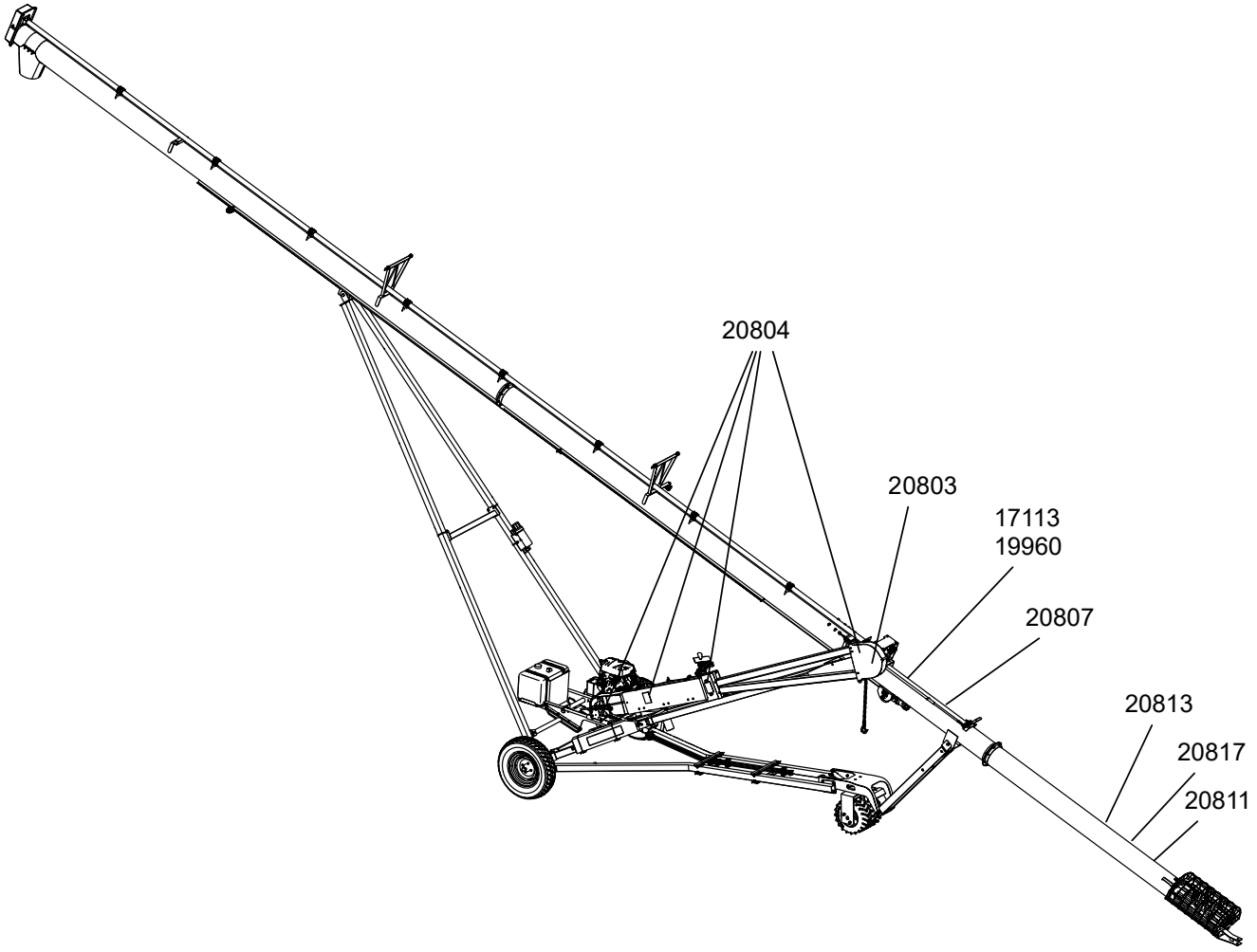

Figure 2. Safety Decal Locations

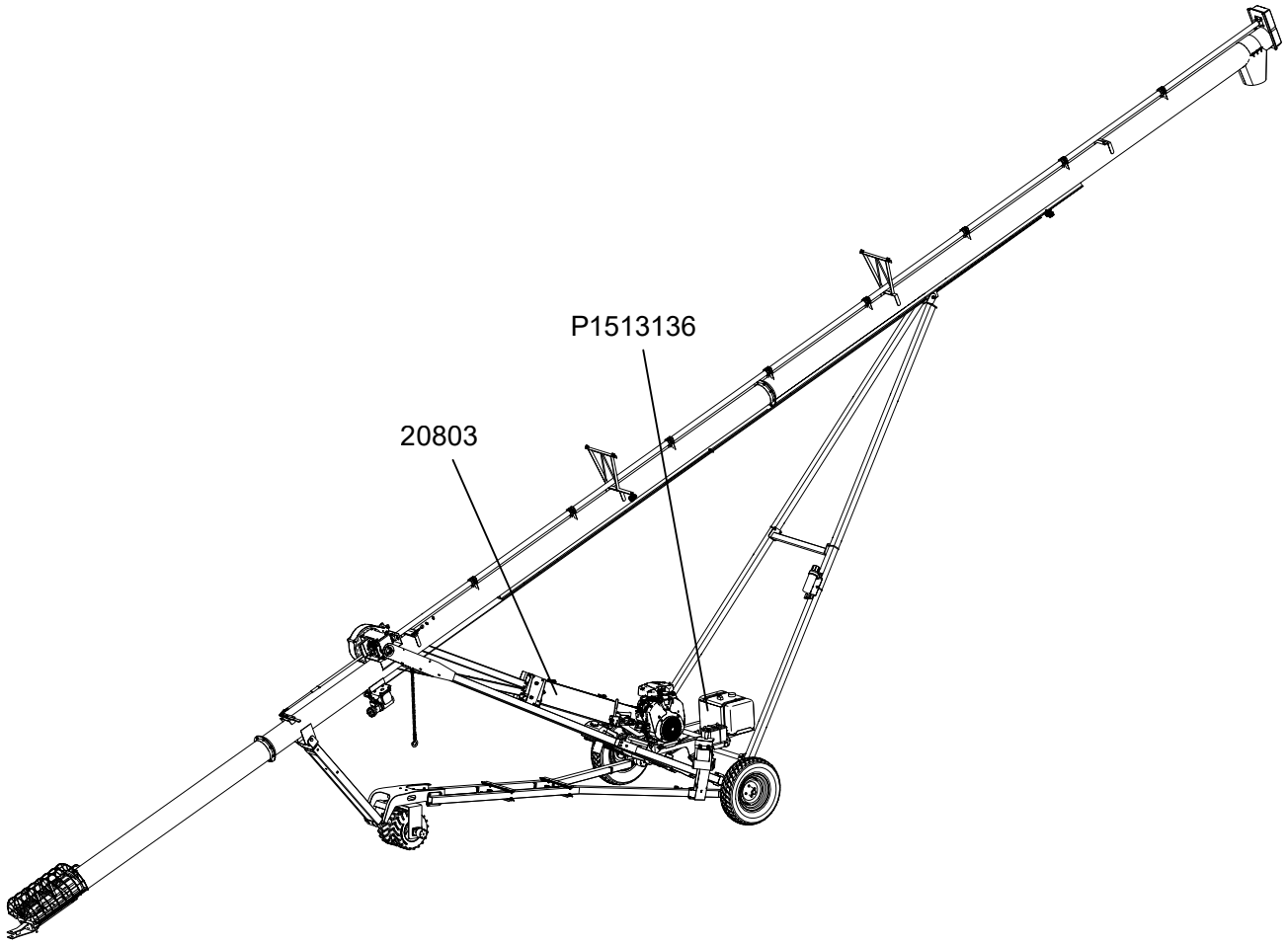

Figure 3. Optional Safety Decal Locations (Hydraulic Steering)

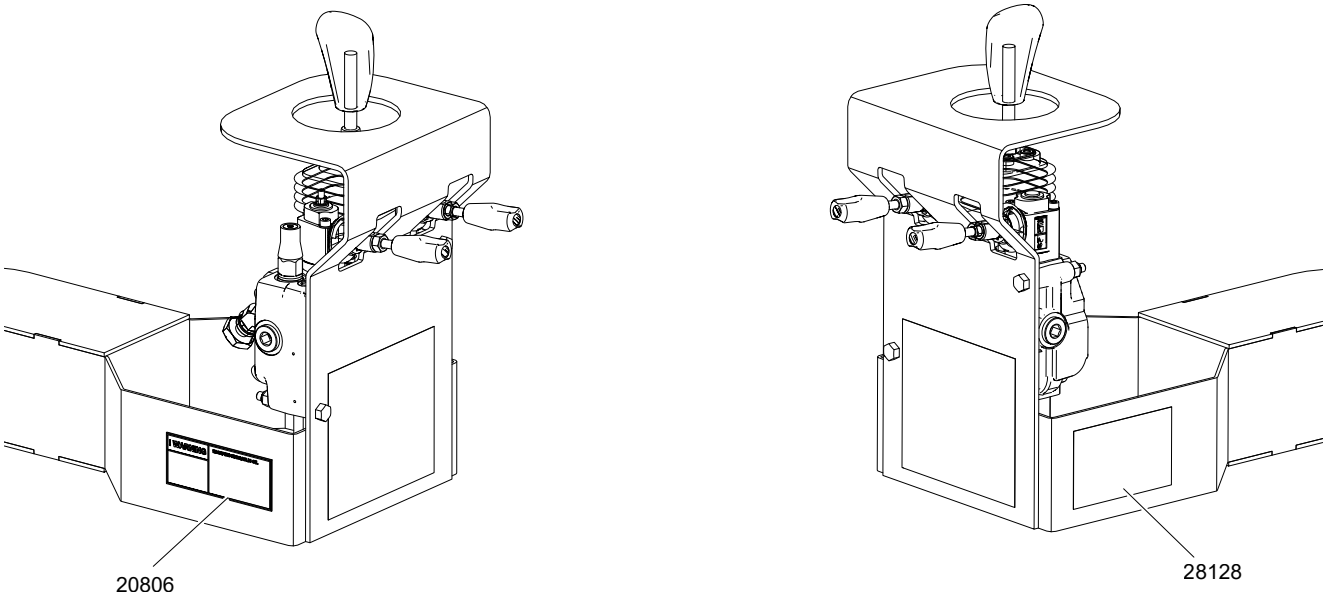

Figure 4. Decal Locations (Hydraulic Winch)

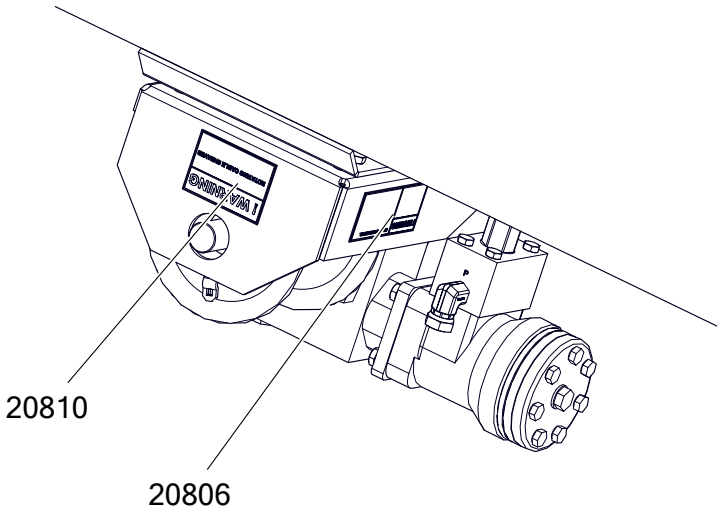

Table 1. Safety Decals

Part Number	Description
20817	
20813	

Table 1 Safety Decals (continued)

Part Number	Description
20803 (inside)	
20804	
20806	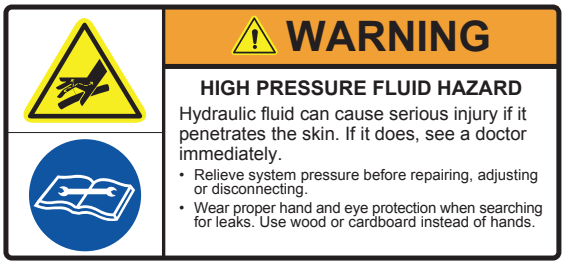

Table 1 Safety Decals (continued)

Part Number	Description
20807	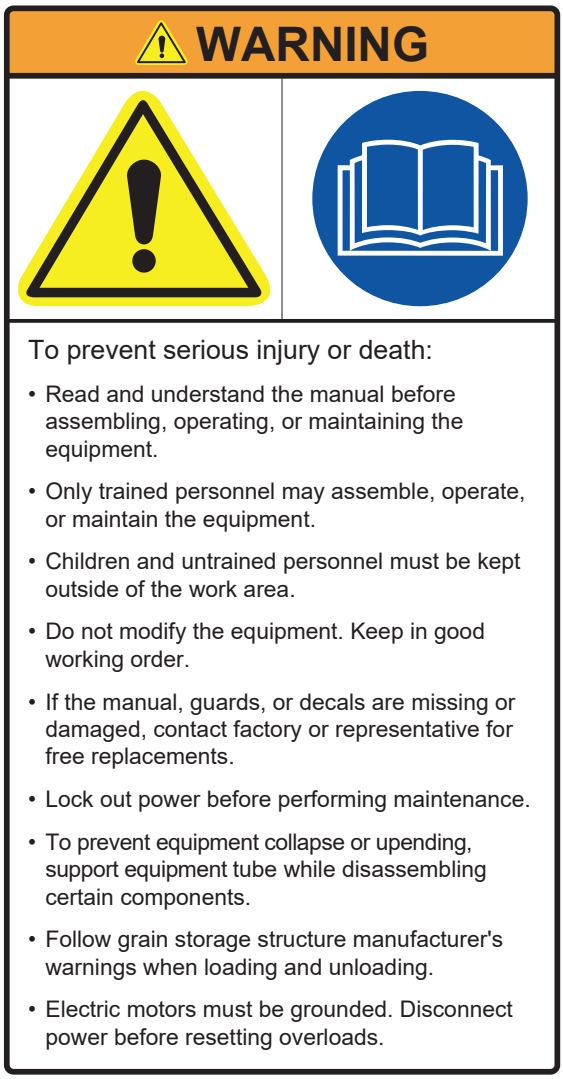
20810	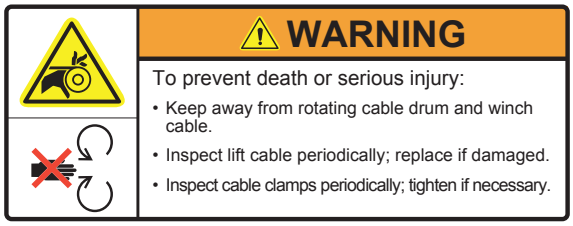

Table 1 Safety Decals (continued)

Part Number	Description
20811	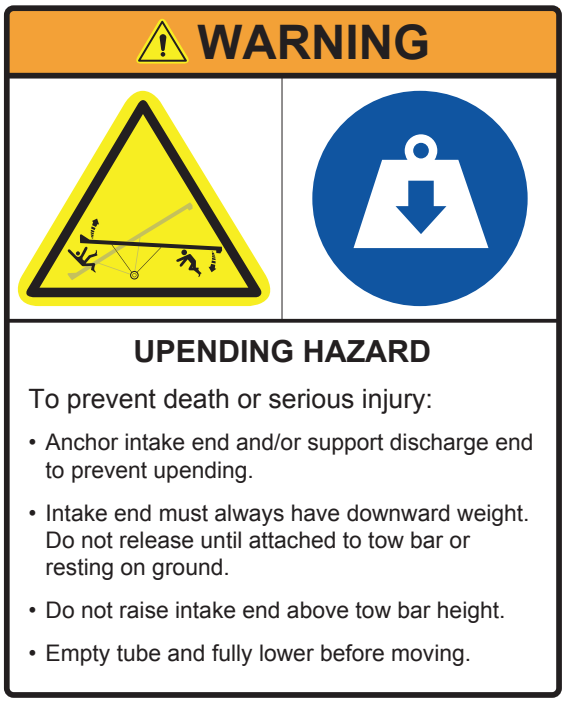
17113	
28128	

Table 1 Safety Decals (continued)

Part Number	Description
P1513136	**⚠ WARNING** **CONTENTS MAY BE UNDER PRESSURE** As part of the fuel vapour retention system, it is normal for your tank to expand from internal pressure. Use the vent screw to relieve pressure and before refueling. To remove cap: 1. Open VENT SCREW on top of cap FULLY. 2. Locate Pressure Relief Tab under cap. Turn cap until Pressure Relief Tab Lock engages. 3. Press down on tab, rotate cap 1/4 turn (to relieve pressure before opening tank) and release tab. STOP. Lock may engage again. 4. PRESS Pressure Relief Tab down again and turn slowly to remove cap. 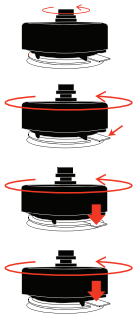 To tighten cap: • Turn Closure caps until an audible “click” is heard. Failure to follow may result in fuel spillage.
19960	***NOTICE*** To prevent damage, wheels must be free to move when raising or lowering equipment. When equipment is positioned, chock all wheels.

3. Features

Read this section to familiarize yourself with the basic component names and functions of the auger.

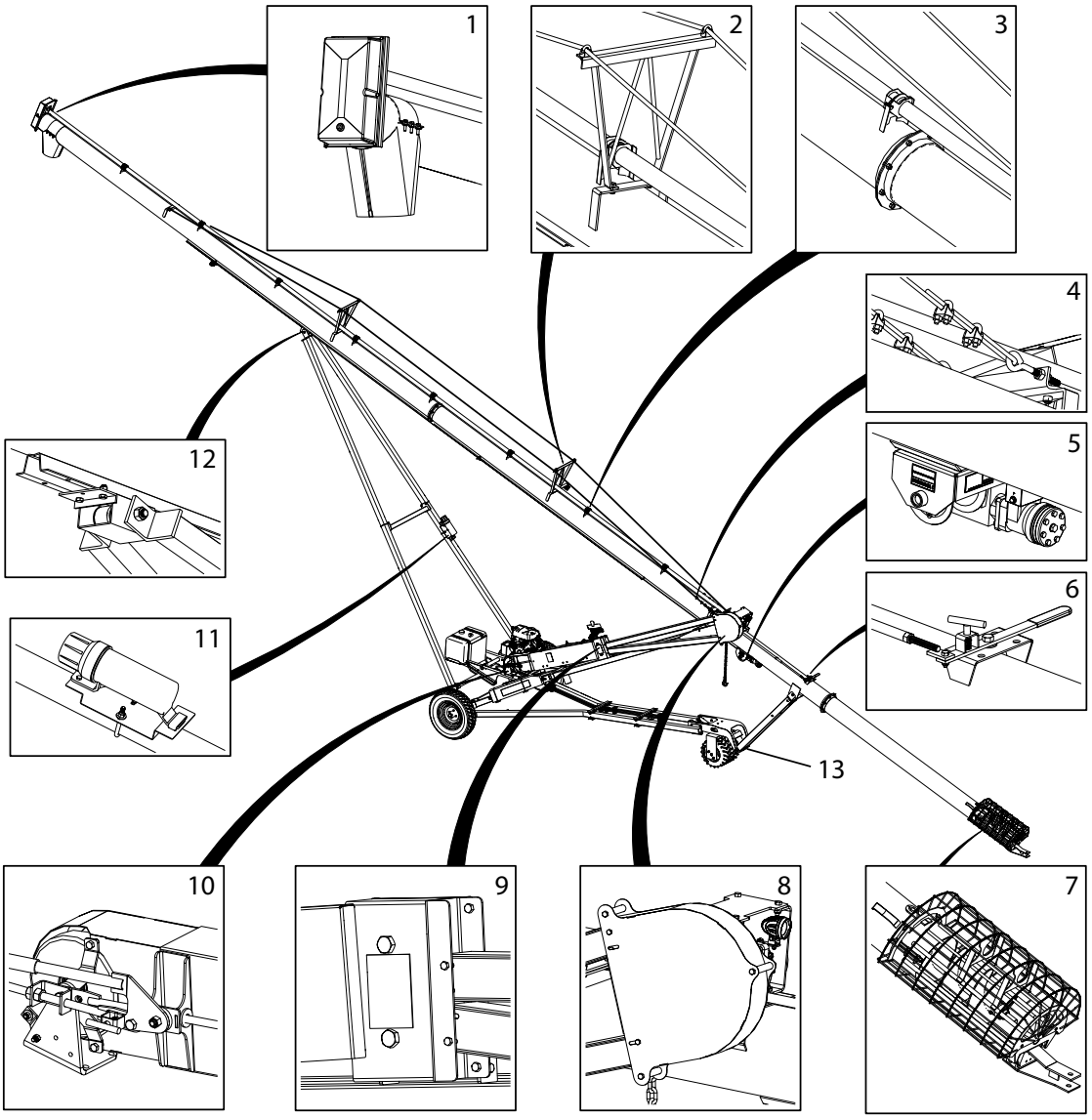

Item	Description	Item	Description
1	Discharge & Upper Chain Drive	8	Pulley Guarding
2	Cable Bridge	9	Belt Idler
3	Shaft Guarding	10	Belt Tension Adjustment
4	Cable Adjustment	11	Manual Holder
5	Hydraulic Winch	12	Track
6	Reversible Gearbox Control	13	Hydraulic HDSP Kit
7	Intake & Intake Guarding	**Also included:** Electric Clutch, and Light Kit	

4. Assembly

Before continuing, ensure you have completely read and understood this manual's Safety section, in addition to the safety information in the section(s) below.

4.1. Assembly Safety

WARNING

- Do not take chances with safety. The components can be large, heavy, and hard to handle. Always use the proper tools, rated lifting equipment, and lifting points for the job.
- Carry out assembly in a large open area with a level surface.
- Always have two or more people assembling the auger.
- Make sure you have sufficient lighting for the work area.
- Tighten all fasteners according to their specifications. Do not replace or substitute bolts, nuts, or other hardware that is of lesser quality than the hardware supplied by the manufacturer.

4.2. Check Shipment

Unload the auger parts at the assembly site and compare the packing slip to the shipment. Ensure that all items have arrived and that none are damaged. Take pictures of shipments prior to or just after unloading if there are any damaged parts.

Report missing or damaged parts immediately to ensure that proper credit is received from AGI or your representative, and to ensure that any missing parts can be shipped quickly to avoid holding up the assembly process.

Important

Do not assemble or install damaged components.

4.3. Before You Begin

Before you assemble the auger:

- Familiarize yourself with all the sub-assemblies, components, and hardware that make up the equipment.
- Have all parts and components on hand, and arrange them for easy access.
- Separate the hardware (bolts, nuts, etc.) and lay them out into groups for easier identification during assembly.
- If assembling inside, confirm the ceiling and door width/height provide enough clearance when installing the undercarriage and to remove the auger from the building.
- Ensure there is adequate space to remove the assembled auger from the assembly area.

4.4. Hydraulic Fittings and Bolt Tightening

Remember the following considerations when tightening hydraulic fittings and bolts:

- Tighten all fasteners to the torque specified in Section 6.1 – Bolt Torque on page 83. Do not replace or substitute bolts, nuts, or other hardware that is of lesser quality than the hardware supplied by the manufacturer.
- All hydraulic fittings should be torqued to the recommended specifications. See Section 6.2 – Fittings Torque Values on page 84.

NOTICE Do not over-tighten fittings. Over-tightening hose fittings can crack the fittings or motor body and will void the warranty.

4.5. Brand and Model Decal Placement

Important

Do not cover any existing safety or instruction decals with the model decals.

1. Apply decals to both sides of auger tube.
2. Center decals vertically and apply to auger tube.

Brand and Model Decal Locations

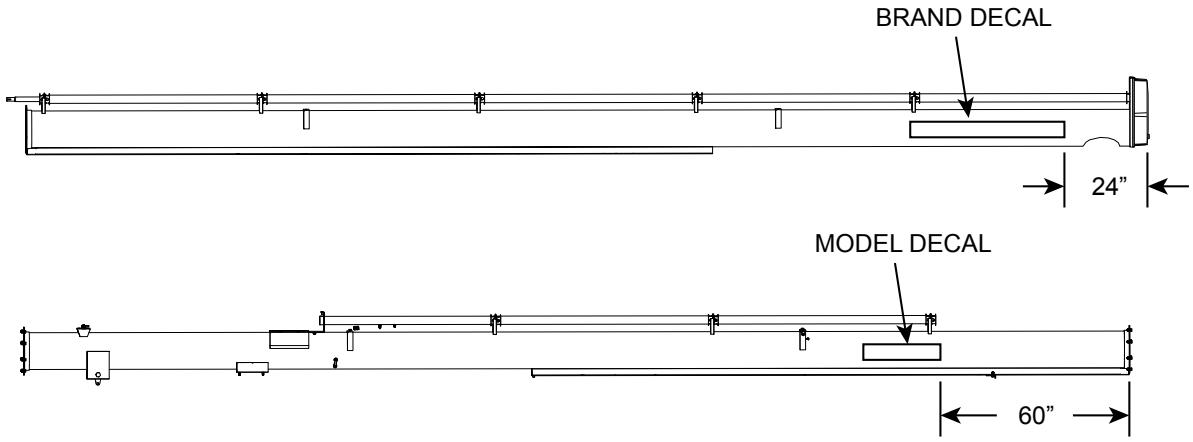

4.6. Assemble Tube & Flighting

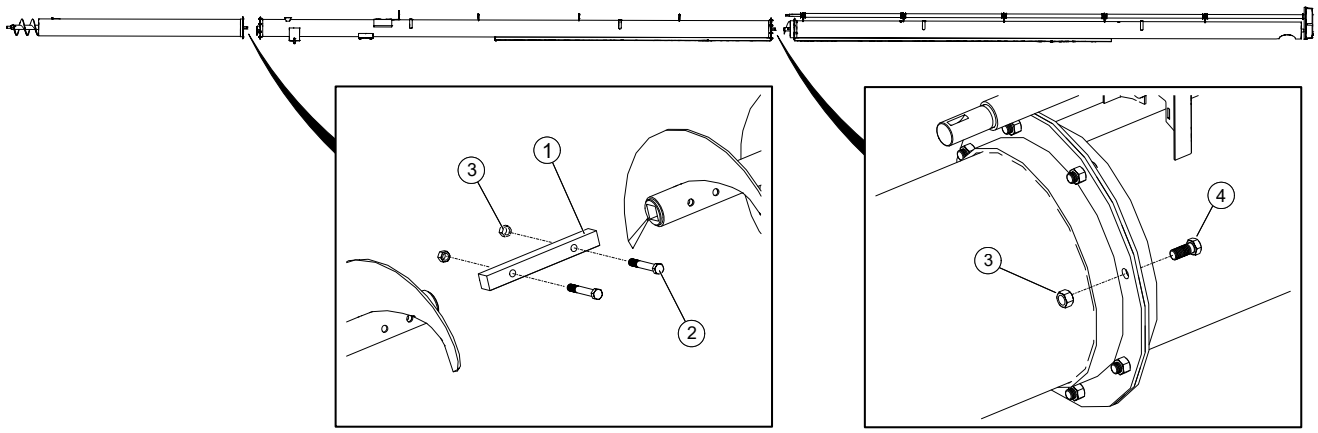

1	Flight Connector Shaft	3	Lock Nut, 7/16"
2	Bolt, 7/16" x 3"	4	Bolt, 7/16" x 1"

4.7. Install the Track Stops

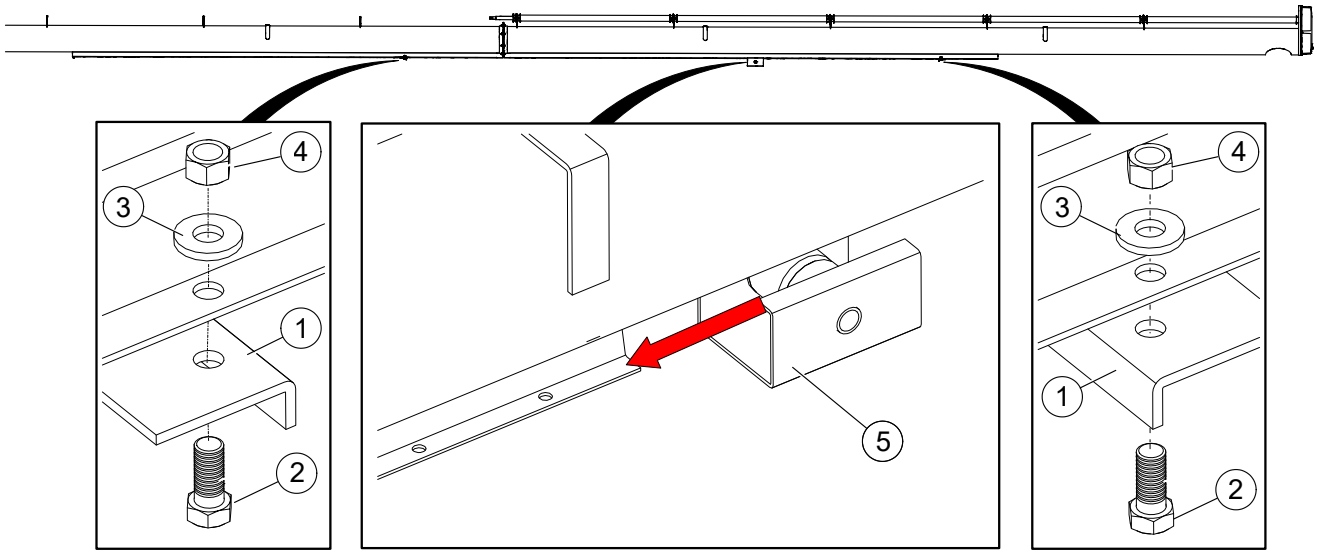

Assembly Note:

- Slide the track shoe onto the track before attaching the upper track stop.

1	Track Stop	4	Lock Nut, 7/16"
2	Bolt, 7/16" x 1"	5	Track Shoe
3	Track Washer, 7/16"		

Upper Tube

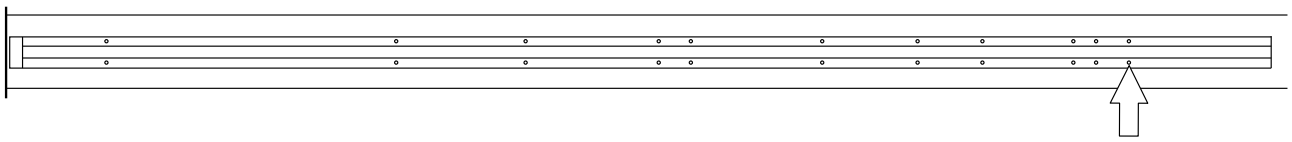

Middle Tube

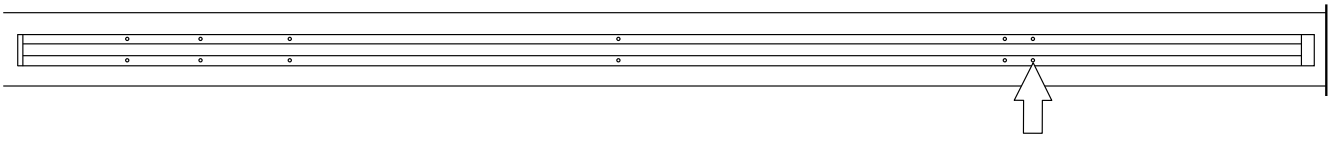

4.8. Install the Driveshaft

To use this section:

1. Locate and review the driveshaft layout drawing for the auger you are assembling in Section 4.8.1 – Driveshaft Layout Drawing on page 27.
2. Follow the instructions in Section 4.8.2 – Assemble the Driveshaft on page 27 while referring to the layout drawing for the auger you are assembling.

4.8.1 Driveshaft Layout Drawing

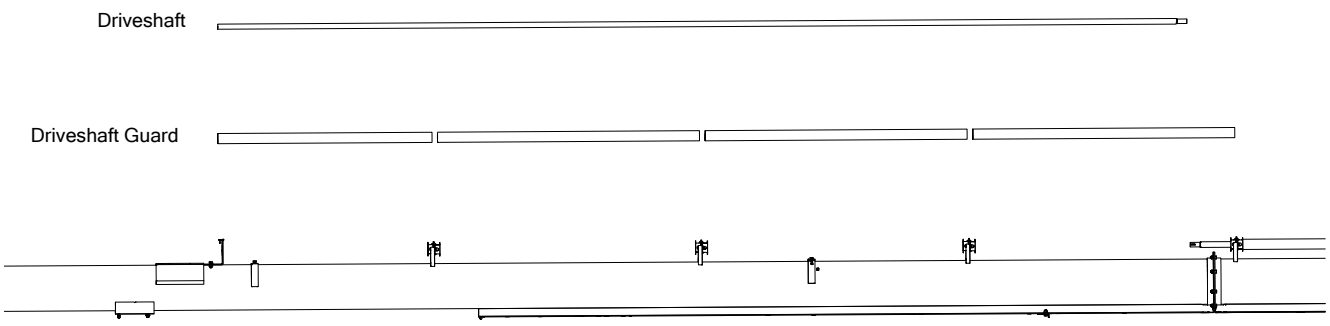

4.8.2 Assemble the Driveshaft

Overview

Step	Description
1	Slide on Driveshaft and Driveshaft Guards
2	Connect the Driveshafts
3	Slide up the Driveshaft Guard
4	Install the Bearing
5	Install the Lower Driveshaft Guard
-	Repeat steps 3-4 until all lengths of driveshaft and driveshaft guard are installed

Step 1: Slide on Driveshaft and Driveshaft Guards

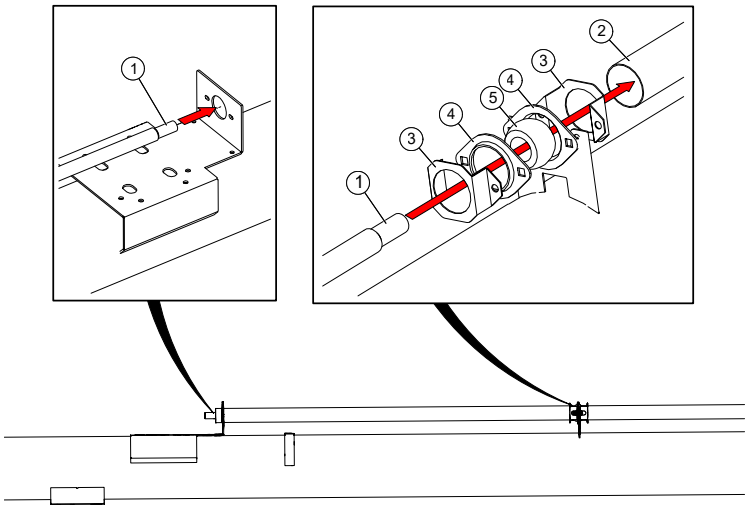

Assembly Notes:

- The wood bearing, flange and flange bearing bracket are pre-installed; these will need to be removed before installing the driveshaft.
- Slide the driveshaft through the wood bearing assembly and upper driveshaft guard, then slide the guard down to connect the middle and lower driveshafts.

1	Lower Driveshaft
2	Driveshaft Guard
3	Flange Bearing Hanger Bracket
4	Flange, 1-1/4"
5	Wood Bearing

Step 2: Connect the Driveshafts

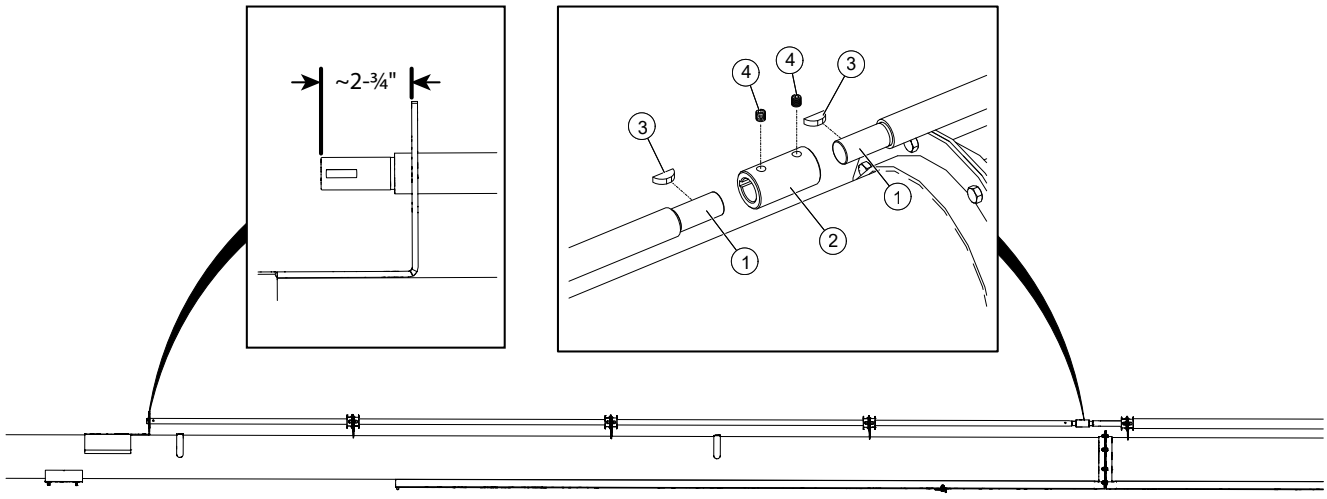

1	Driveshaft	3	Woodruff Key, 1/4" x 1"
2	Driveshaft Connector	4	Set Screw, 3/8" x 3/8"

Step 3: Slide up the Driveshaft Guard

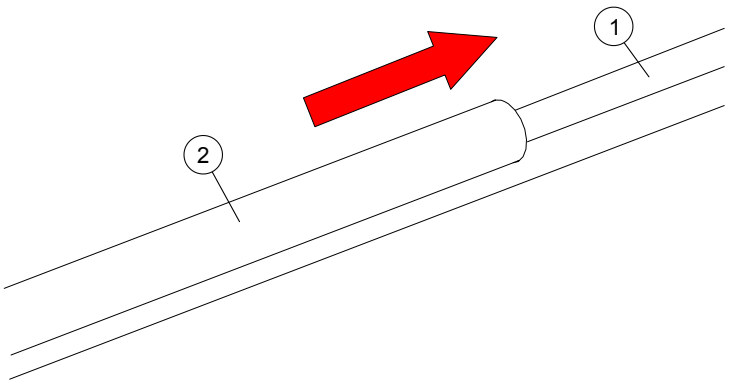

1	Driveshaft
2	Driveshaft Guard

Step 4: Install the Bearing

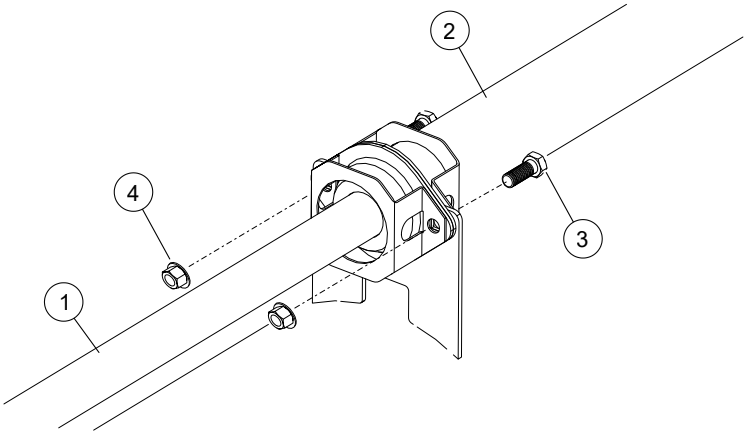

1	Lower Driveshaft
2	Driveshaft Guard
3	Bolt, 3/8" x 1"
4	Whiz Nut, 3/8"

Step 5: Install the Lower Driveshaft Guard

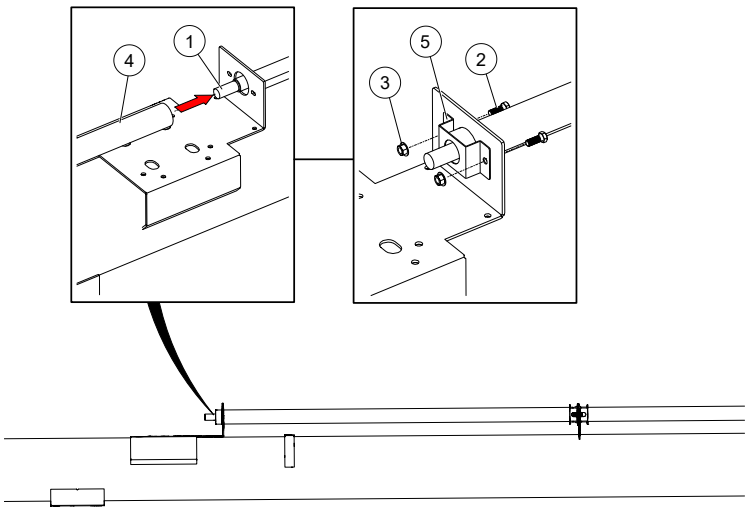

1	Lower Driveshaft
2	Bolt, 3/8" x 3/4"
3	Whiz Nut, 3/8"
4	Lower Driveshaft Guard
5	Guard Hanger Bracket

4.9. Install the Spout

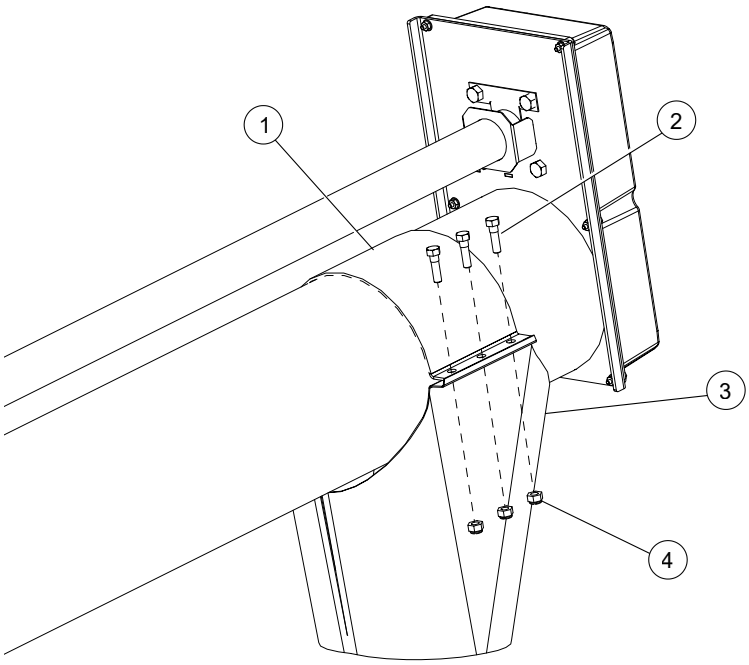

1	Half Clamp
2	Bolt, 7/16" x 1-1/2"
3	Spout
4	Lock Nut, 7/16"

4.10. Add Grease to Head Cover

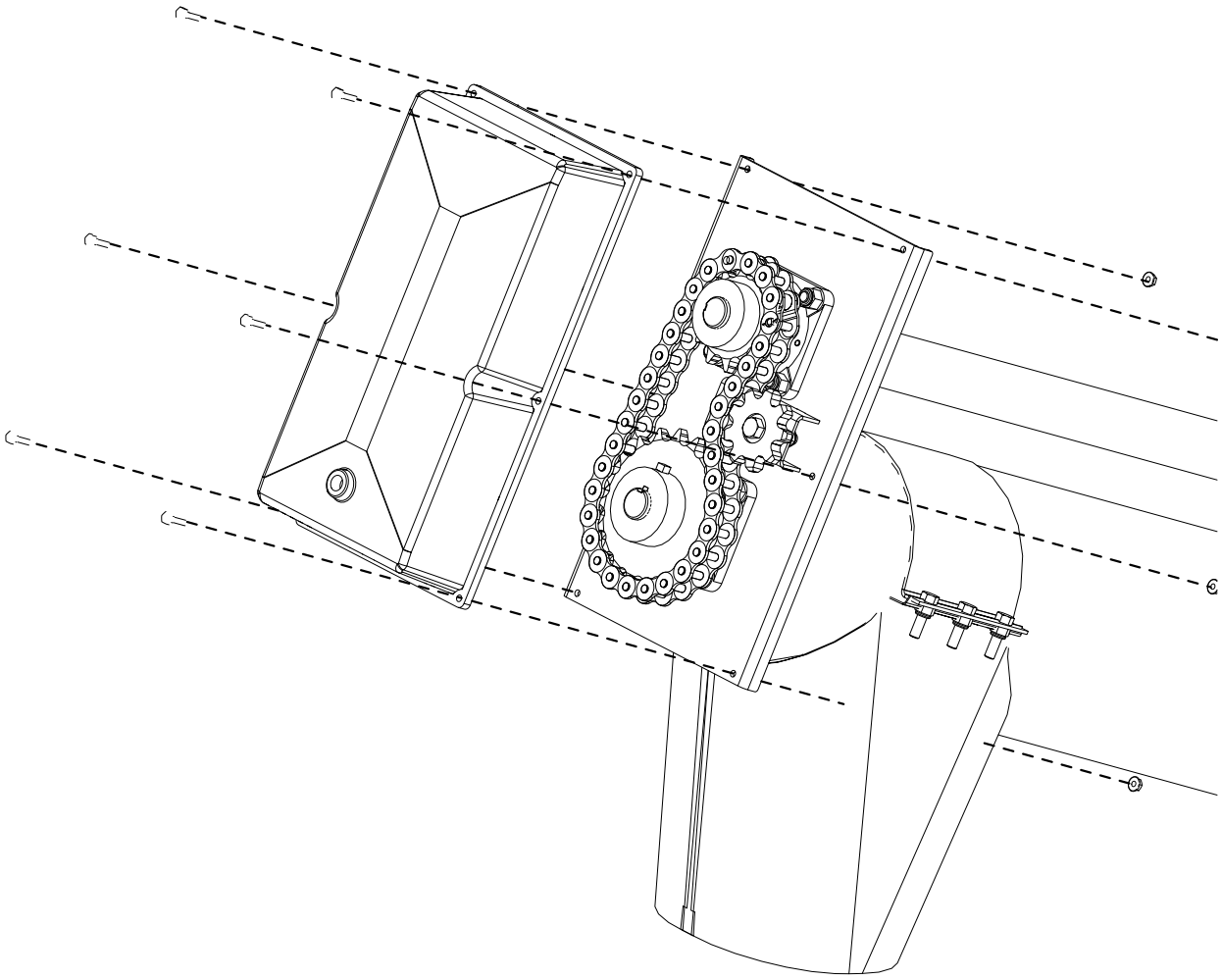

1. Remove the head cover from the discharge end.
2. Fill the head cover half full of grease.
3. Lubricate the chain.
4. Re-install the head cover.

4.11. Install the Intake Cage

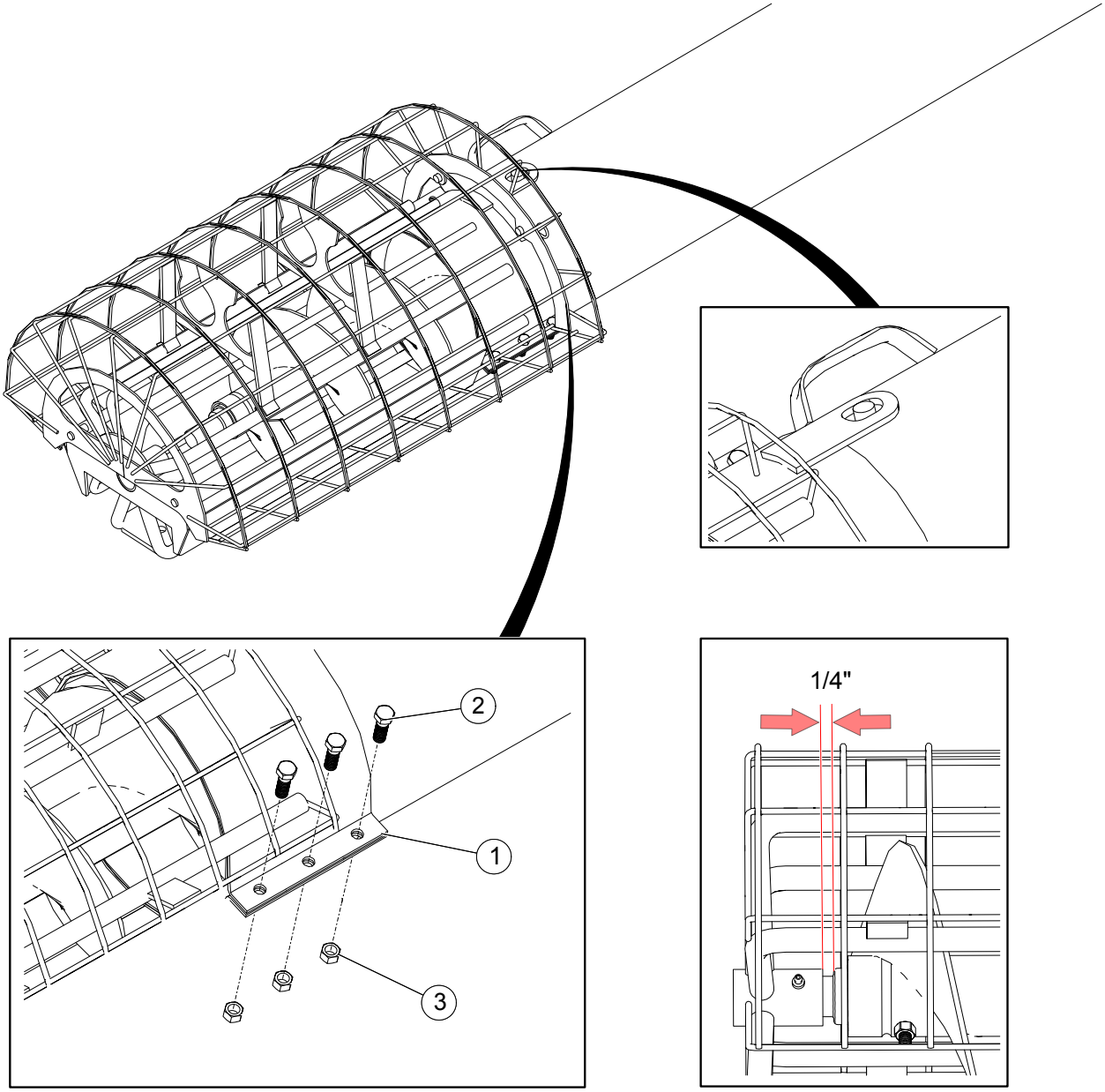

Assembly Notes: • Ensure the slot on the intake cage engages the retention pin on the lower tube. • Maintain a 1/4" clearance between the bushing and the end of the flight.			
1	Intake Cage	3	Lock Nut, 7/16"
2	Bolt, 7/16" x 1-1/4"		

4.12. Install Truss Tower and Cable

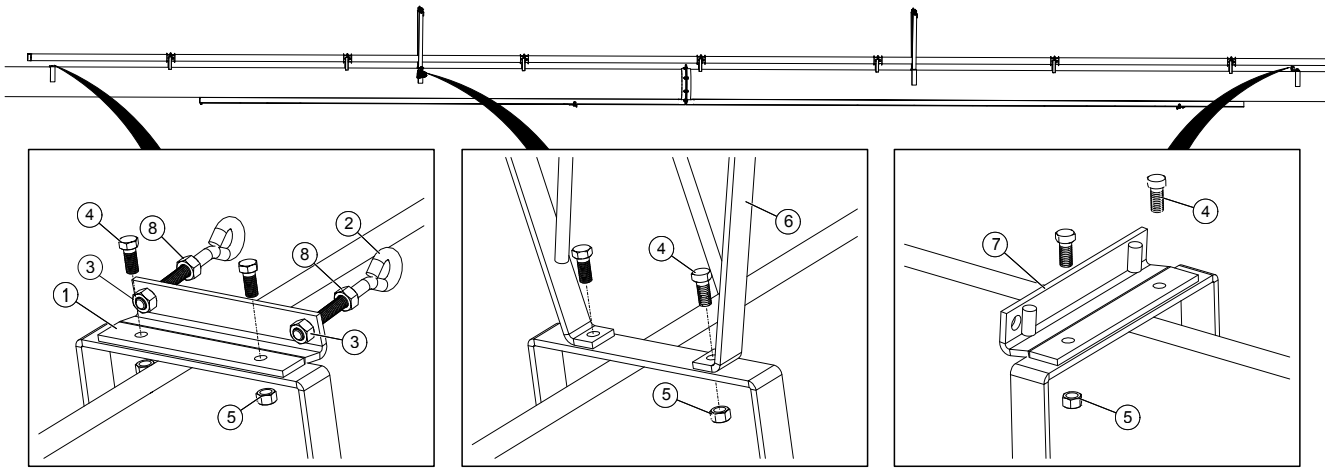

1	Truss Cable Anchor Bracket, Bottom	5	Lock Nut, 7/16"
2	Eyebolt, 1/2"	6	Truss Bracket
3	Lock Nut, 1/2"	7	Truss Cable Anchor (with welded rods)
4	Bolt, 7/16" x 1"	8	Hex Nut, 1/2"

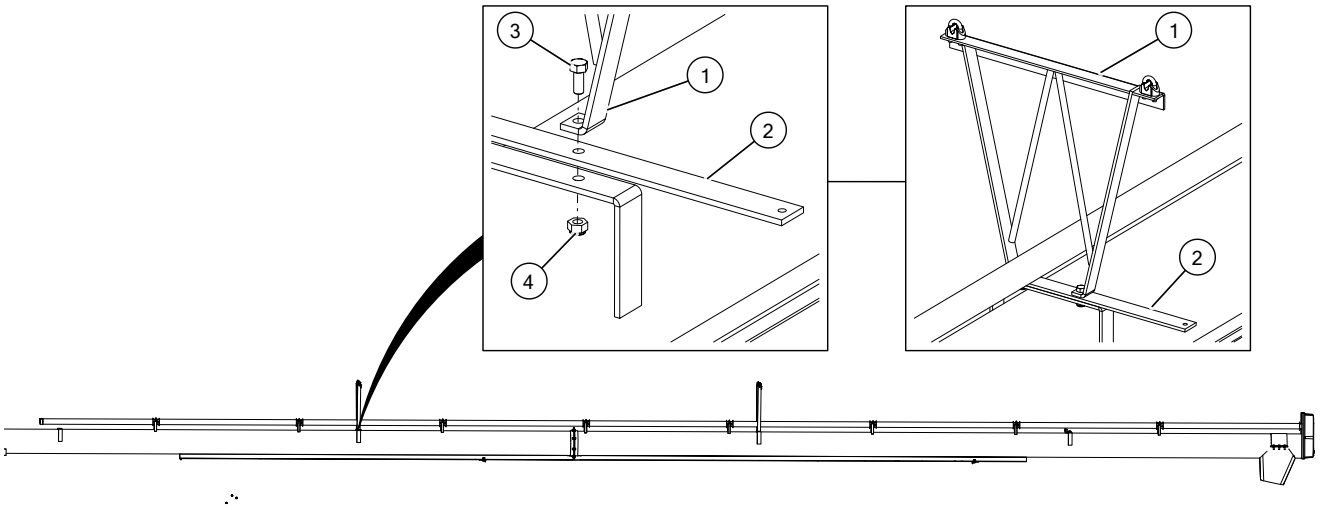

1	Truss Bracket	3	Bolt, 7/16" x 1-1/4"
2	Light Bracket	4	Lock Nut, 7/16"

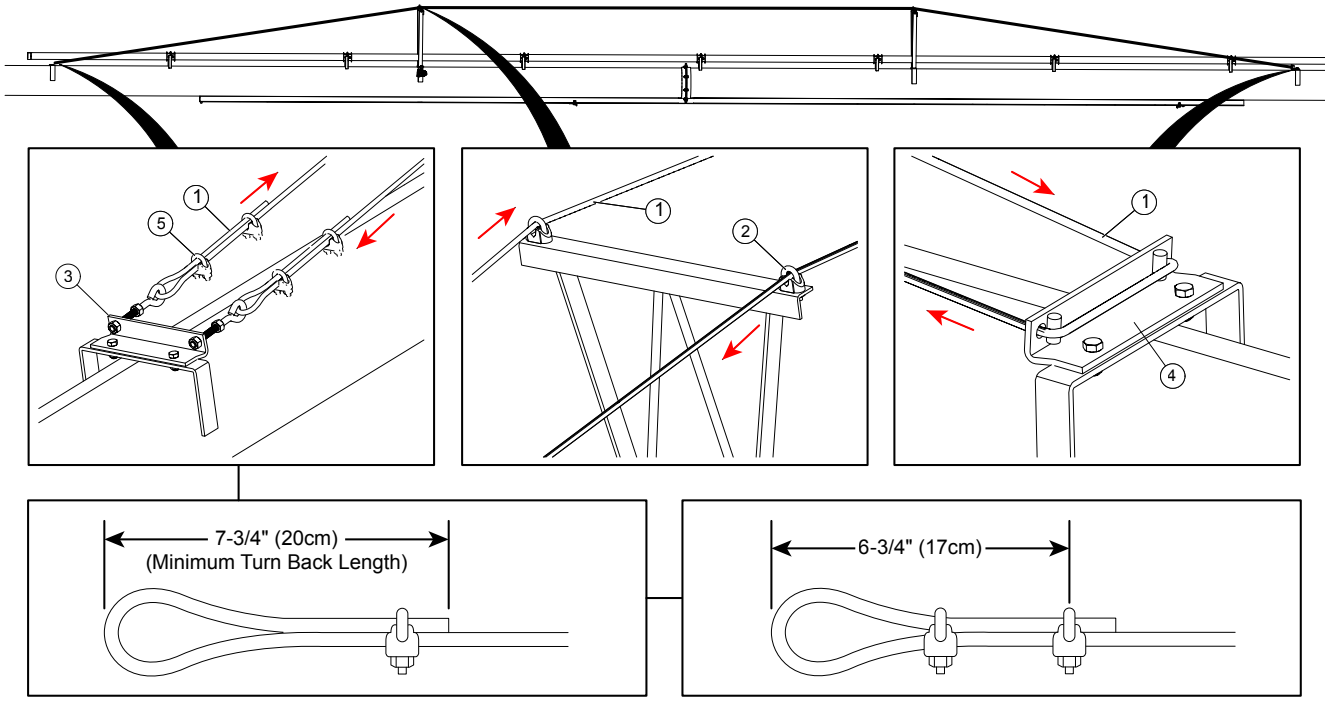

1	Cable	4	Truss Cable Anchor (with welded rods)
2	Cable Clamp, 1/4"	5	Cable Clamp, 5/16"
3	Truss Cable Anchor Bracket, Bottom		

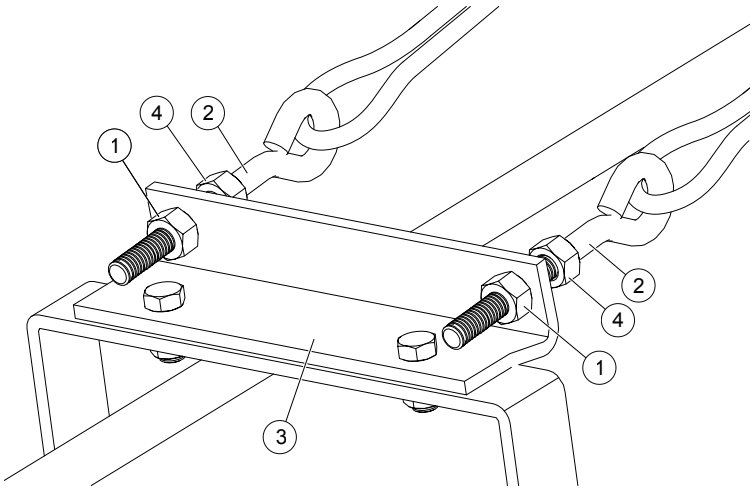

1	Lock Nut, 1/2"
2	Eyebolt, 1/2"
3	Truss Cable Anchor, Bottom
4	Hex Nut, 1/2"

1. Thread truss cable through eyebolt and double-back 7-3/4" (20 cm) of cable. Secure the cable in place by installing and tightening two 5/16" cable clamps.
   a. Apply the first clamp 6-3/4" from the cable loop with the u-bolt over the dead end. The live end rests in clamp saddle. Tighten nuts firmly but do not fully tighten.
   b. Apply the second clamp as close to the loop as possible in the same orientation as the first clamp. The live end rests in clamp saddle. Apply tension and tighten nuts firmly but do not fully tighten.
2. Tighten the lock nuts evenly to take the remaining slack out of the truss cable.

Important

Take slack out of the truss cable only (DO NOT tension the cable). Tension in the cable will cause the auger to droop at the flange when in the lowered position.

3. Check for proper side-to-side alignment.
4. Tighten all cable clamps to the recommended torque.

Cable Clamp	Nut Torque
1/4"	15 ft·lb
5/16"	20 ft·lb

5. Tighten the hex nuts against the cable anchor bracket.

4.13. Attach Lower Frame to Tube

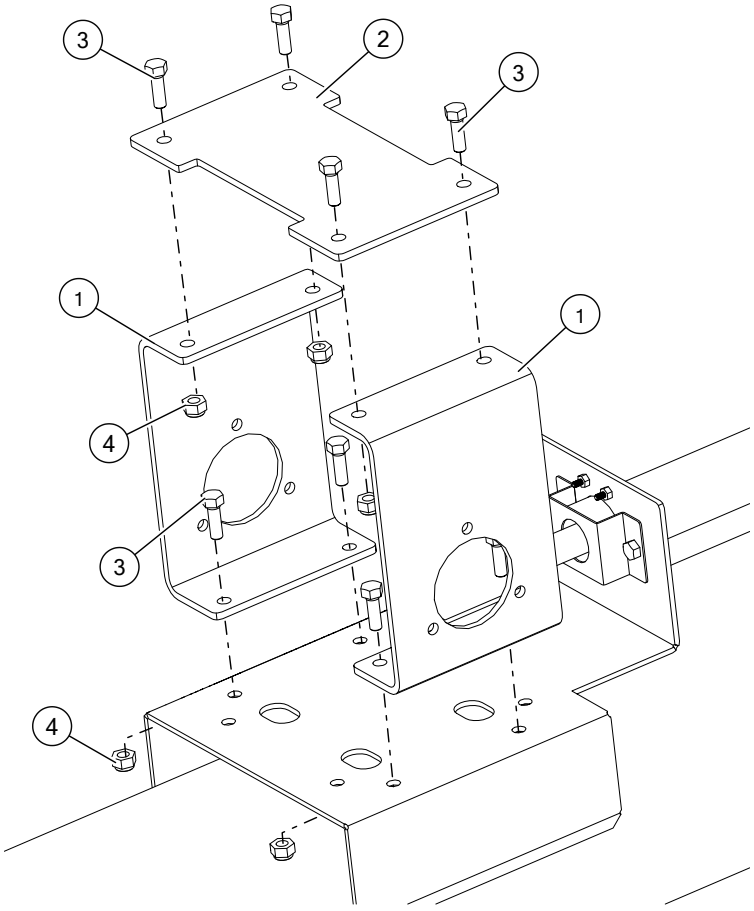

1	Lower Frame Connect Bracket
2	Top Cover Bracket
3	Bolt, 7/16" x 1-1/4"
4	Lock Nut, 7/16"

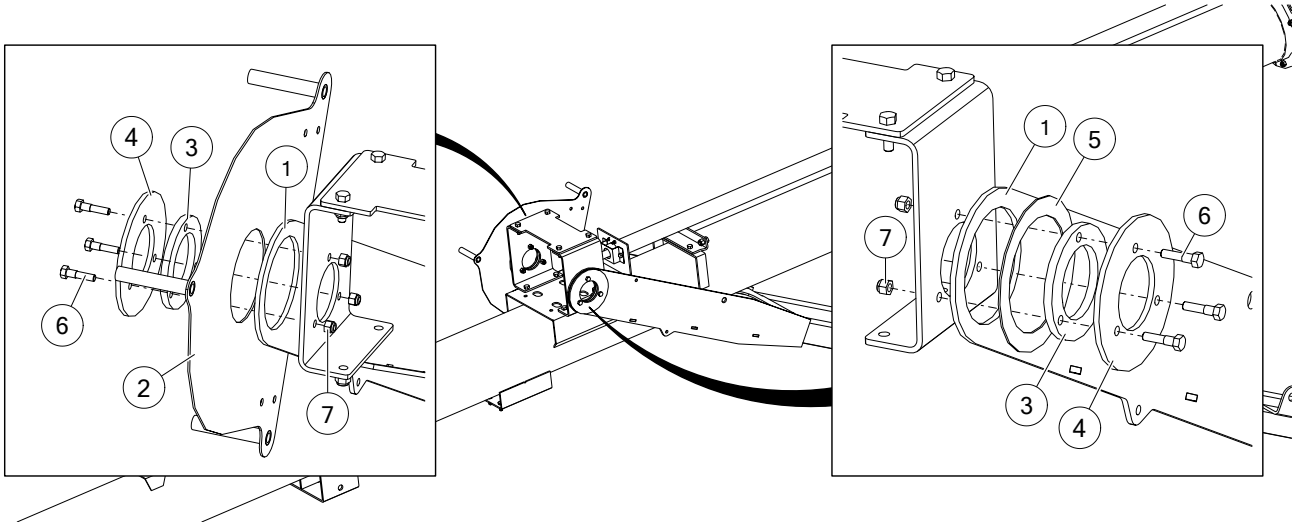

Assembly Note:

- Center the pulley shim guard on the lower arm bolt holes.

1	Lower Frame	5	Spacer
2	Pulley Shim Guard	6	Bolt, 3/8" x 1-1/2"
3	Bolt Plate, Small	7	Lock Nut, 3/8"
4	Bolt Plate, Large		

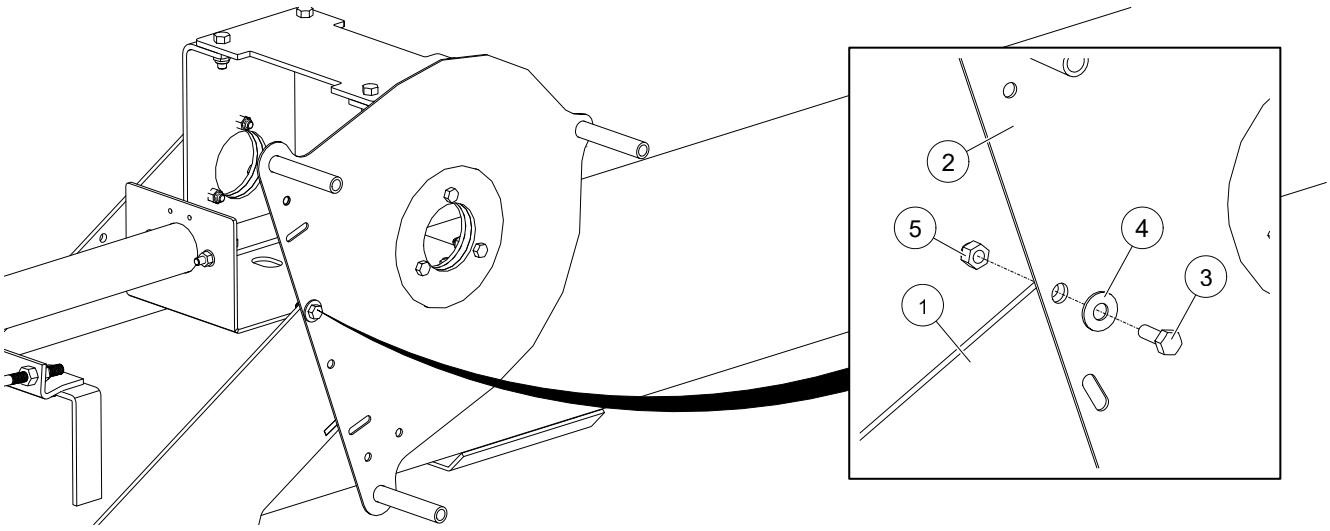

1	Lower Frame	4	Flat Washer, 3/8"
2	Pulley Shim Guard	5	Lock Nut, 3/8"
3	Bolt, 3/8" x 1"		

4.14. Attach Lower Frame to Axle

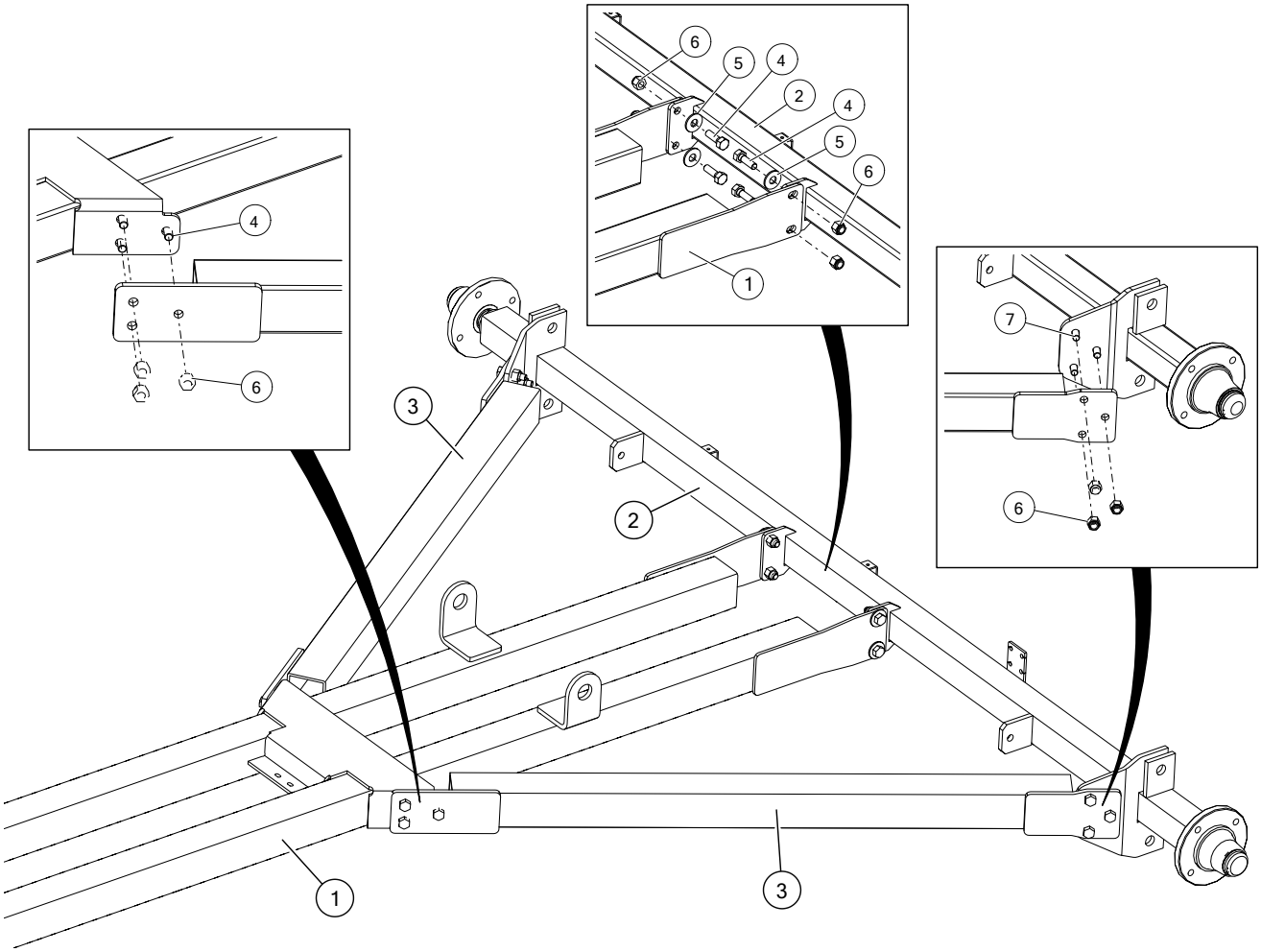

Assembly Notes:

- Loosely install the lower frame to the axle assembly.
- Loosely install all the lower support frame hardware.
- Tighten all hardware once all of the hardware has been placed.

1	Lower Frame	5	Flat Washer, 1/2"
2	Axle Assembly	6	Lock Nut, 1/2"
3	Lower Support Frame	7	Bolt, 1/2" x 1-3/4"
4	Bolt, 1/2" x 1-1/2"		

4.15. Attach Upper Frame to Tube

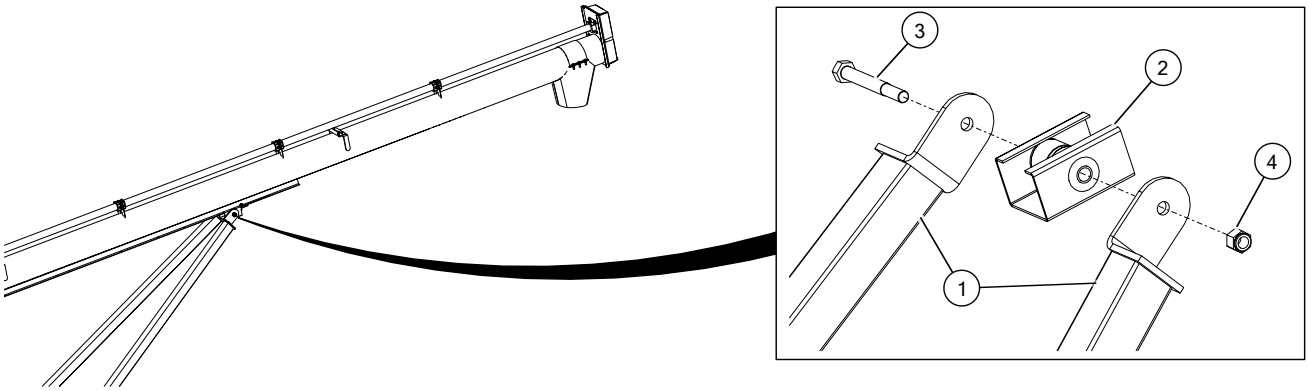

1	Upper Frame Arm	3	Bolt, 3/4" x 6-1/2"
2	Track Shoe (Installed in a previous section)	4	Lock Nut, 3/4"

4.16. Attach Upper Frame to Axle

Important

Be sure to use proper hoisting equipment and procedures when raising the discharge end of the auger. Lock out the hoist apparatus prior to working around or under the raised tube.

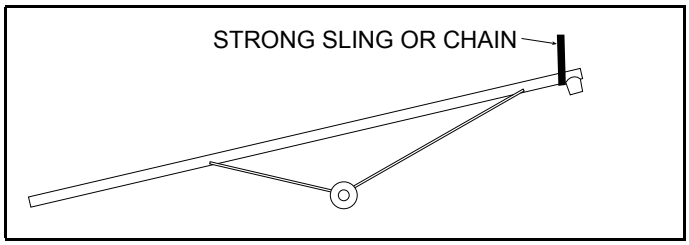

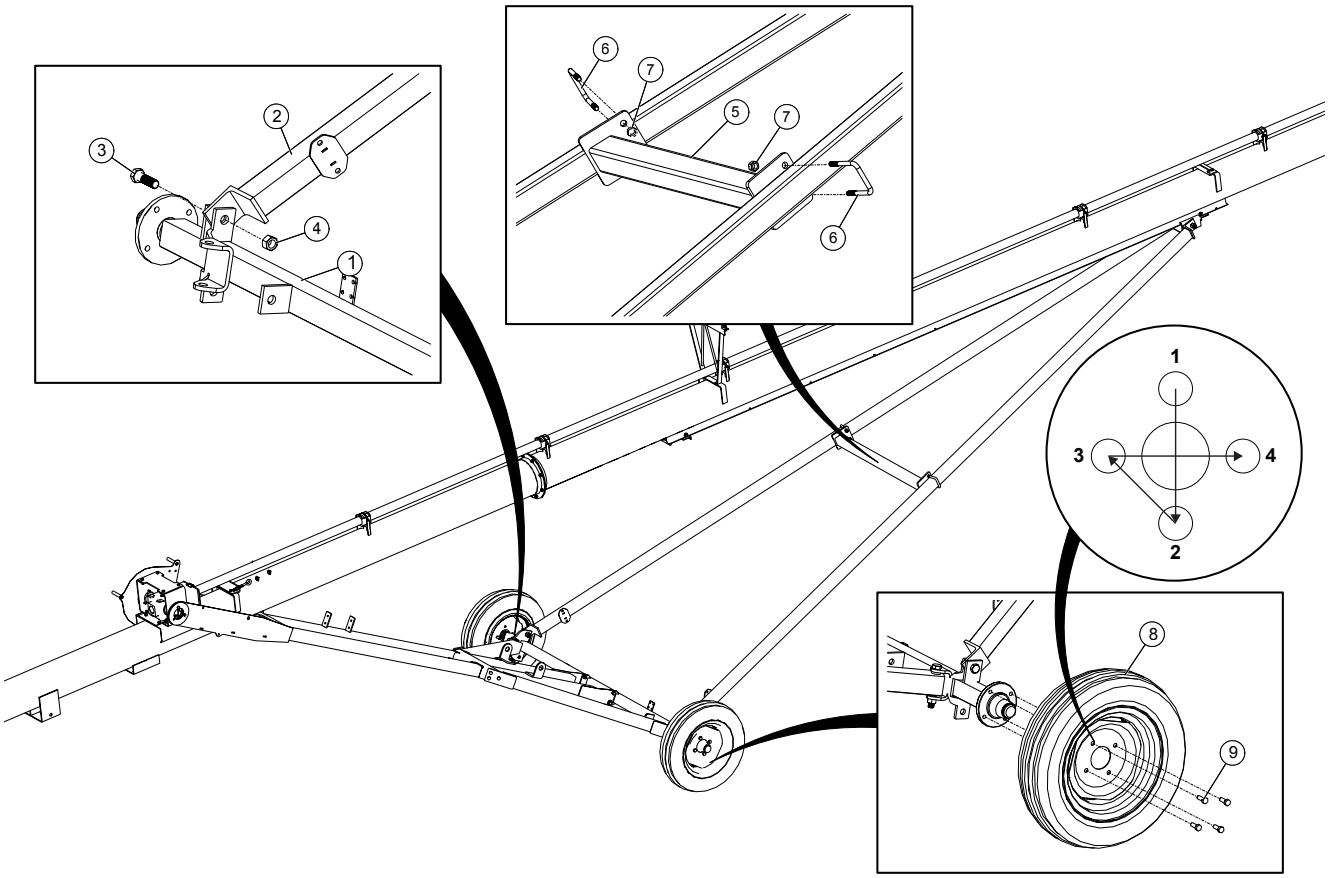

Assembly Notes:

- Remove the stand from the intake end of the auger tube and raise the discharge end with a block and tackle or a front end loader and a strong sling or chain. Height should be sufficient so the frame can be easily attached to the axle.
- Check that air pressure in the tires match pressure indicated on the tire sidewall.
- Torque the wheel bolts to 80 ft·lb ± 10 ft·lb (108.5 N·m ± 13.5 N·m) using the pattern shown.

1	Axle	6	Square U-Bolt, 3/8" x 3-1/16" x 4"
2	Upper Frame Arm	7	Lock Nut, 3/8"
3	Bolt, 3/4" x 2-1/2"	8	Wheel
4	Lock Nut, 3/4"	9	Wheel Bolt, 1/2" x 1"
5	Upper Frame Crossmember		

4.17. Install the Over-Center Drive

1. Once the wheel is bolted to the hub, the over-center drive assembly can be installed.
2. Position the axle cap of the over-center drive assembly squarely on the axle tube.
3. With the pinion gear flush with the ring gear, bolt the axle cap to the axle tube using four carriage bolts and lock nuts.
4. Attach fittings to hydraulic motors.

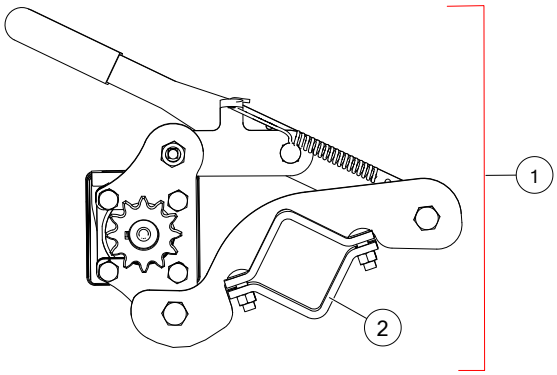

1	Over-Center Drive Assembly
2	Bolt On Axle Cap

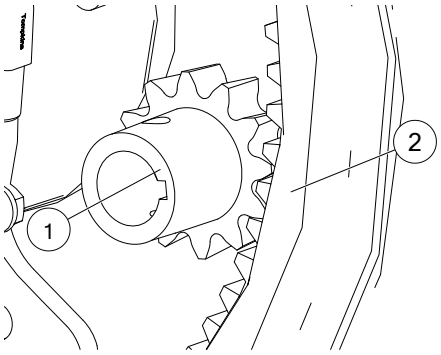

1	Pinion Gear
2	Ring Gear

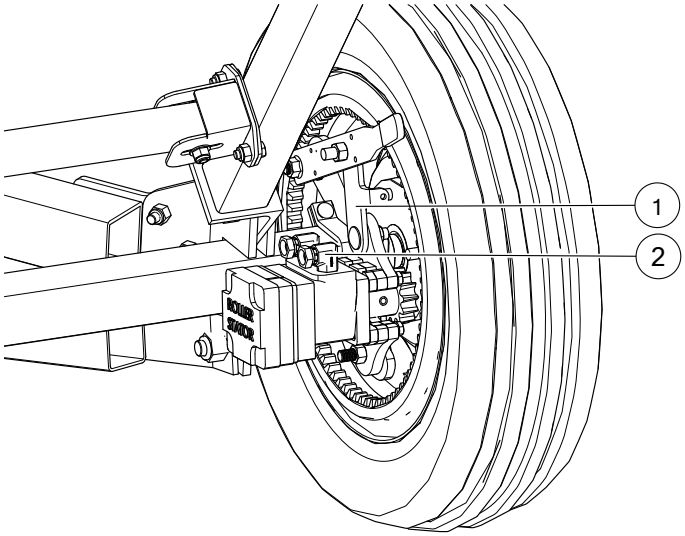

1	Over-Center Drive Assembly
2	Steel Fitting, 90, 8MNPT x 6 FNPSM

4.18. Adjust the Pinion Gear

NOTICE Failure to ensure proper gear meshing will result in gear damage. The pinion gear should mesh with the ring gear to provide maximum tooth contact.

Insufficient meshing

- If the pinion gear will barely mesh with the ring gear, loosen the slot bolt jam nuts and slide the handle towards the tire until the pinion gear teeth mesh with the ring gear teeth without binding.
- If the pinion gear does not mesh fully with the ring gear, adjust the handle slot bolt (which bolts to the drive mount clamp) so full meshing of pinion gear is achieved when handle is in over-center position.

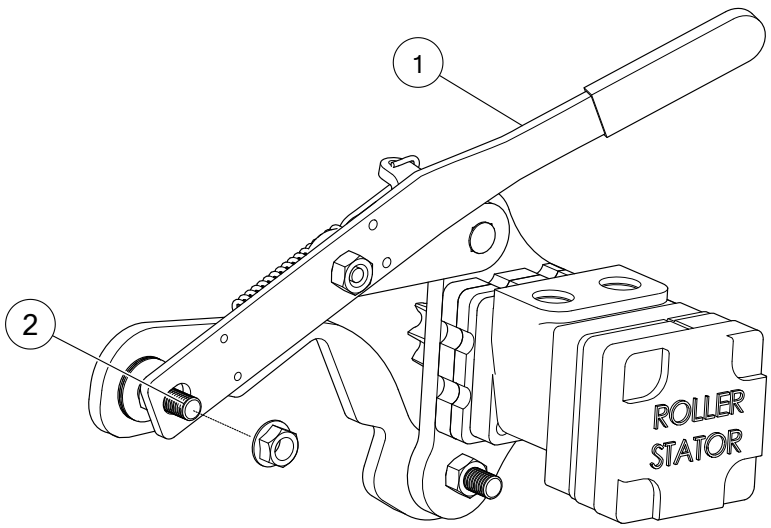

1	Handle
2	Handle Slot Bolt

Gear teeth binding

- If the handle will not ‘lock’ into over-center position, loosen the slot bolt nuts and slide the handle away from the tire.

4.19. Install the Reversible Gearbox

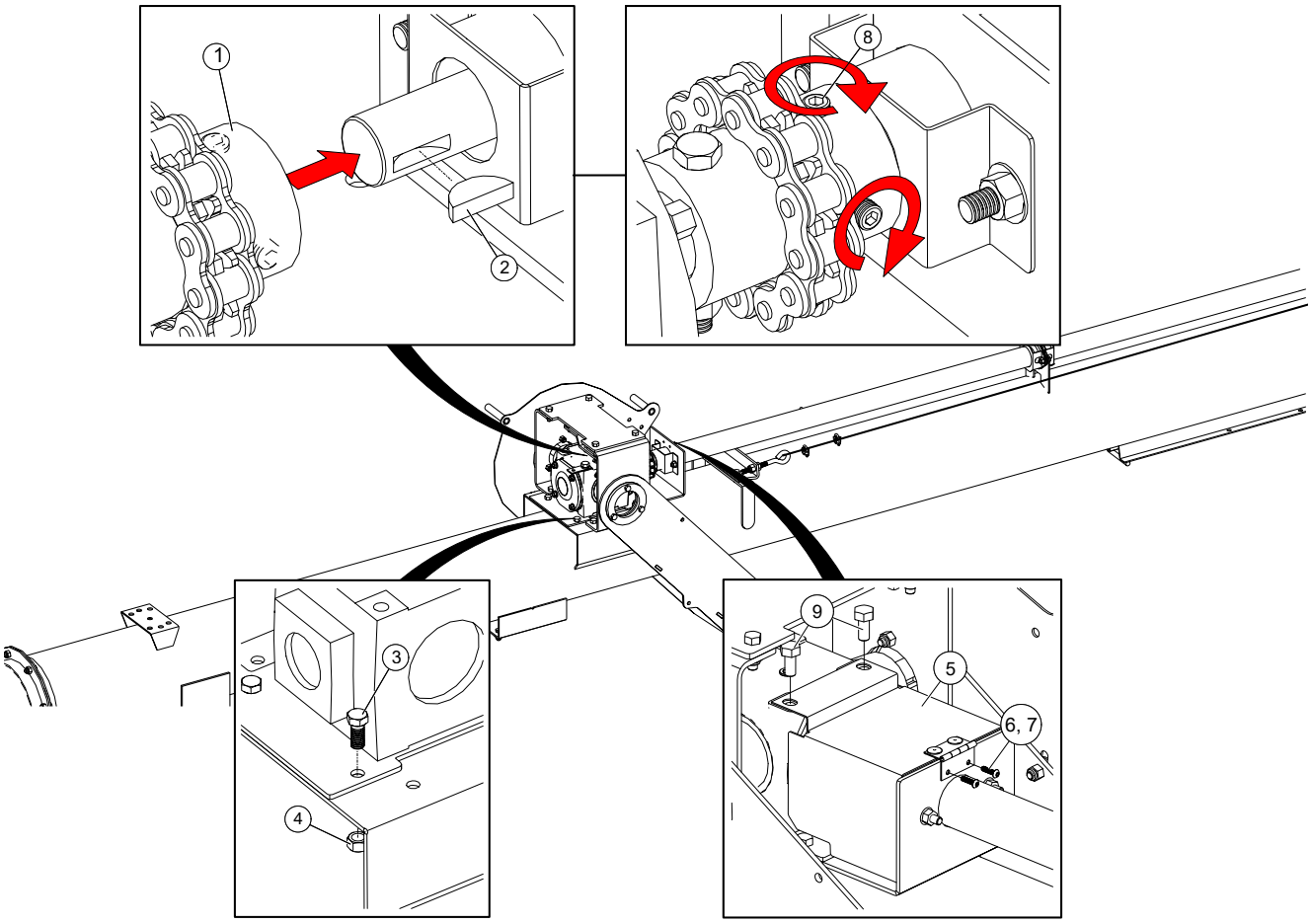

Assembly Notes:

- Check the gearbox oil level; gearbox should be half full. Use only EP90 lube oil and fill to HALF FULL only.
- The ends of the gearbox shaft and the driveshaft should be flush with the inside of the chain coupler sprockets.

If the driveshaft is too long or too short, do the following:

- If driveshaft is too long, take up the extra length in the driveshaft connector.
- If the driveshaft is too short, remove the headcover, chain, sprocket, and lock collar at the top of the upper tube to adjust the two driveshafts.

1	Gearbox Assembly	6	Bolt, #10 x 3/4"
2	Woodruff Key, 1/4" x 1"	7	Lock Nut, #10
3	Bolt, 7/16" x 1"	8	Set Screw, 3/8" x 3/8"
4	Lock Nut, 7/16"	9	Bolt, 1/2" x 3/4"
5	Chain Coupler Guard Assembly		

Note

During assembly, ensure the reversible gearbox components do not interfere with any other auger components.

1. Mount the detent lever assembly to the auger tube.
2. Use the gearbox shifter to move the gearbox into either forward or reverse position.
3. Move the detent lever to the same position as the gearbox shifter (forward or reverse). Ensure the lock pin is engaged with the bracket.
4. Attach the gearbox push rod to the straight gearbox handle extension.
5. Thread the adjust lug roughly halfway into the straight gearbox handle extension.
6. Connect the gearbox push rod to the gearbox shifter. This joint must pivot — do not over-tighten.
7. Loosely attach the adjust lug to the detent lever.
8. Disengage the lock pin and move the detent lever from forward to reverse a few times.
   - Ensure the gearbox fully engages in both directions when moving the lever back and forth.
   - The gearbox should be fully engaged when the lock pin is in the hole.
9. If the gearbox does not shift evenly in both directions, use the adjust lug to increase or decrease the length of the gearbox handle extension as required.

Figure 5. Detent Lever and Offset Tube Attachment

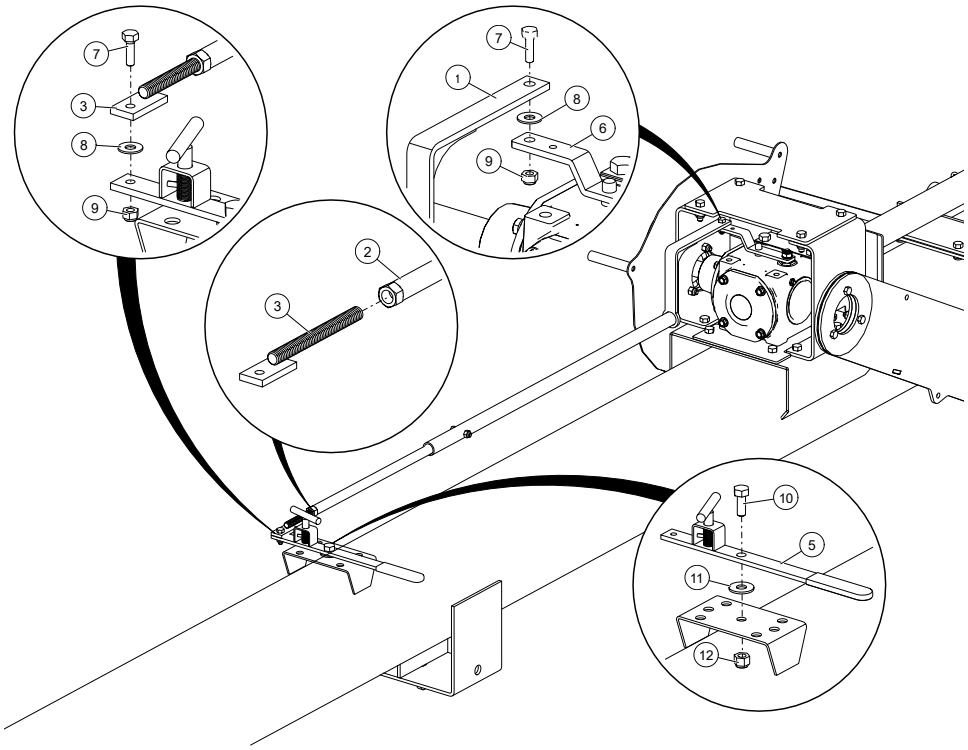

Figure 6. Hole Positions in Straight Gearbox Handle Extension

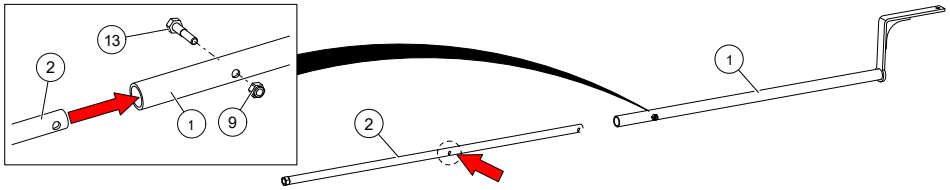

1	Gearbox Push Rod	8	Flat Washer, 5/16"
2	Gearbox Handle Extension, Straight	9	Lock Nut, 5/16"
3	Adjust Lug	10	Bolt, 1/2" x 1-1/4"
4	Lock Pin	11	Flat Washer, 1/2"
5	Detent Lever Assembly	12	Lock Nut, 1/2"
6	Gearbox Shifter	13	Bolt, 5/16" x 1-1/2"
7	Bolt, 5/16" x 1"		

4.20. Install the Motor Mount

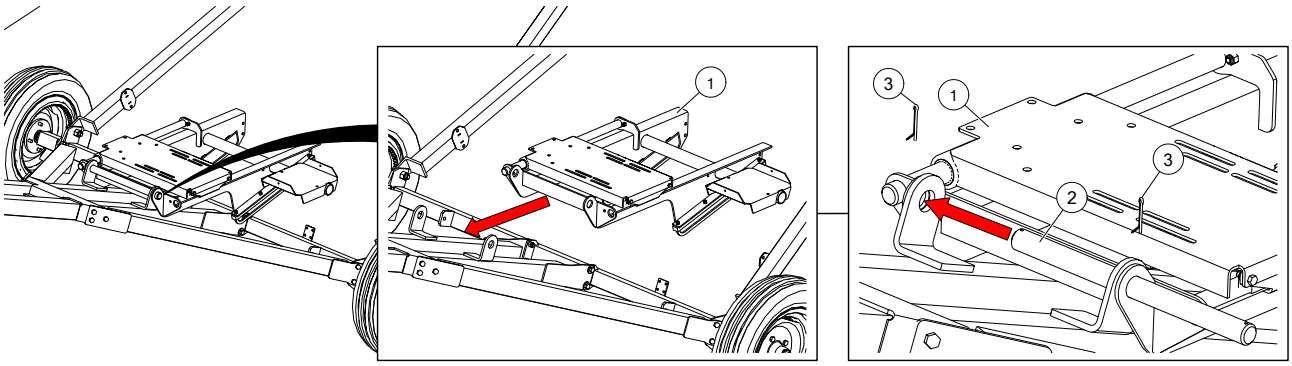

1	Engine Slider Assembly	3	Cotter Pin, 3/16" x 1-3/4"
2	Motor Pivot Pin		

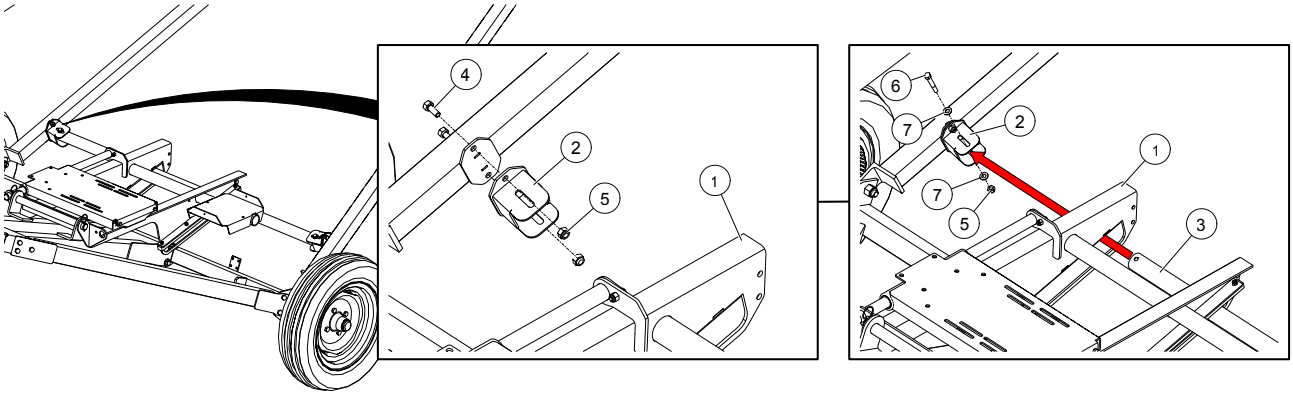

Assembly Note:

- Ensure leveller tube is through slots in the engine slider assembly before attaching to leveller tube mount brackets.

1	Engine Slider Assembly	5	Lock Nut, 7/16"
2	Leveller Tube Mount Bracket	6	Bolt, 7/16" x 3"
3	Leveller Tube	7	Flat Washer, 7/16"
4	Bolt, 7/16" x 1"		

4.21. Install the Gas Drive

4.21.1 Install the Battery and Fuel Tank

Fuel Tank

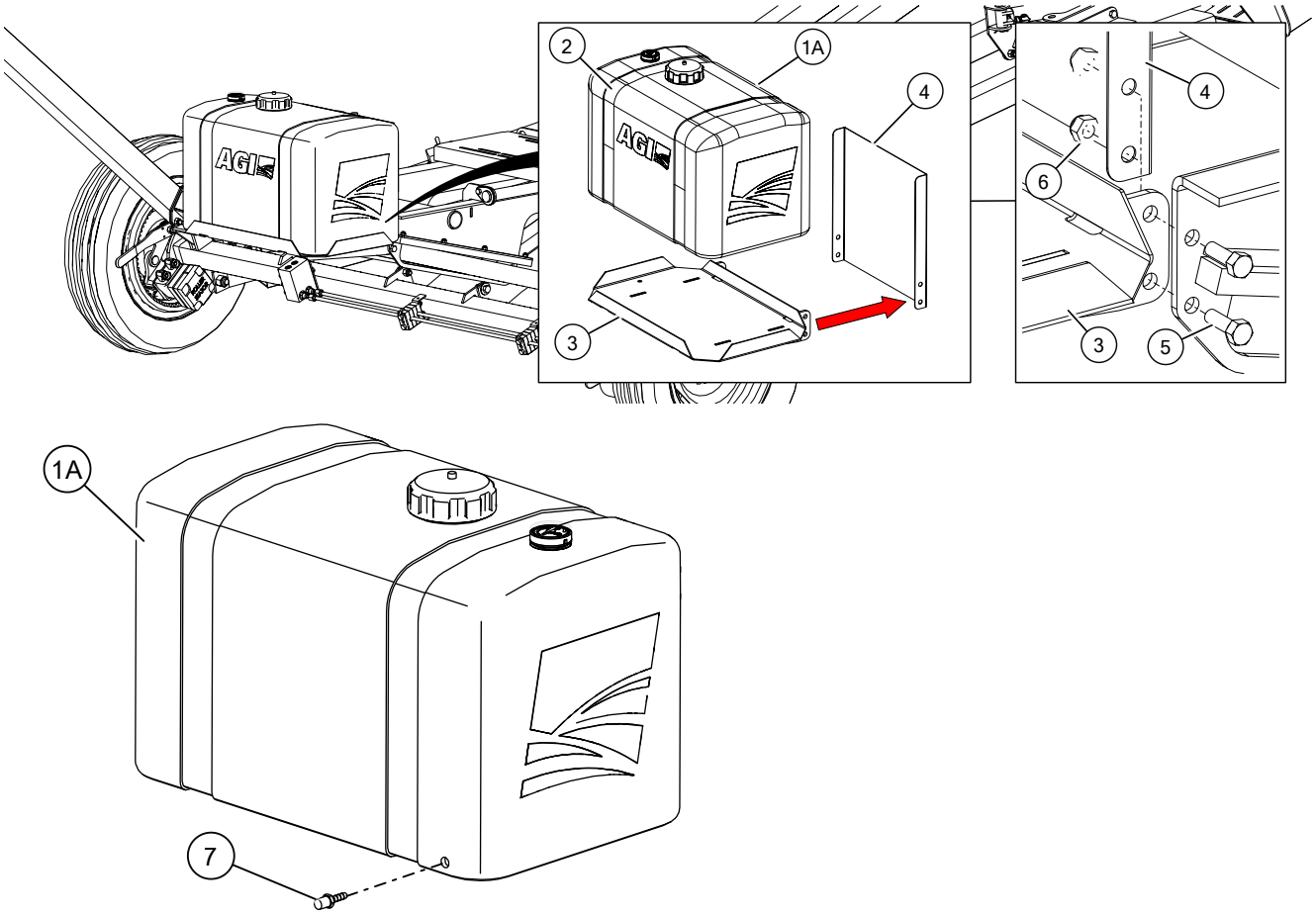

Assembly Note:			
• Route the fuel line between the heat shield and gas tank.			
1A	Non-EPA Fuel Tank	4	Heat Shield
1B	EPA Fuel Tank	5	Bolt, 7/16" x 1-1/4"
2	Fuel Tank Straps	6	Lock Nut, 7/16"
3	Gas Tank Mount	7	125-4B Fitting

Battery

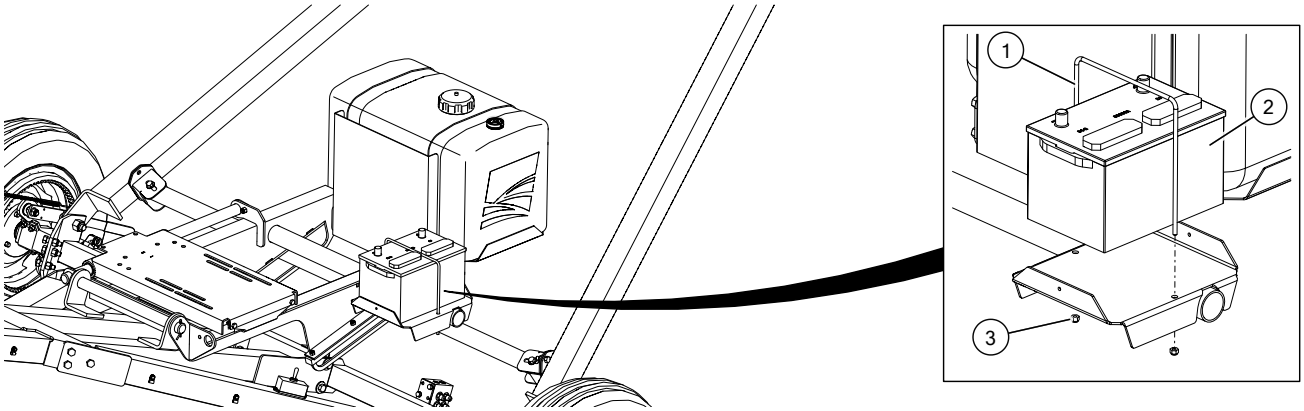

1	U-Bolt, 1/4" x 9-3/4" x 8-1/4"	3	Lock Nut, 1/4"
2	Battery		

4.21.2 Install the Engine Slider Mount Bracket

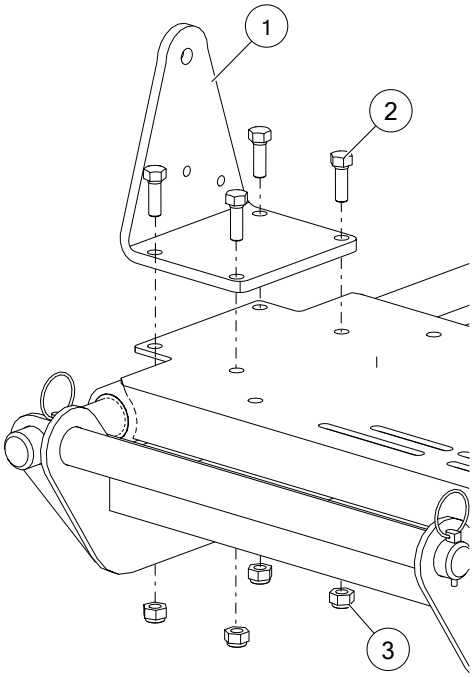

1	Engine Slider Mount Bracket
2	Bolt, 7/16" x 1-1/4"
3	Lock Nut, 7/16"

4.21.3 Install the Hydraulic Pump

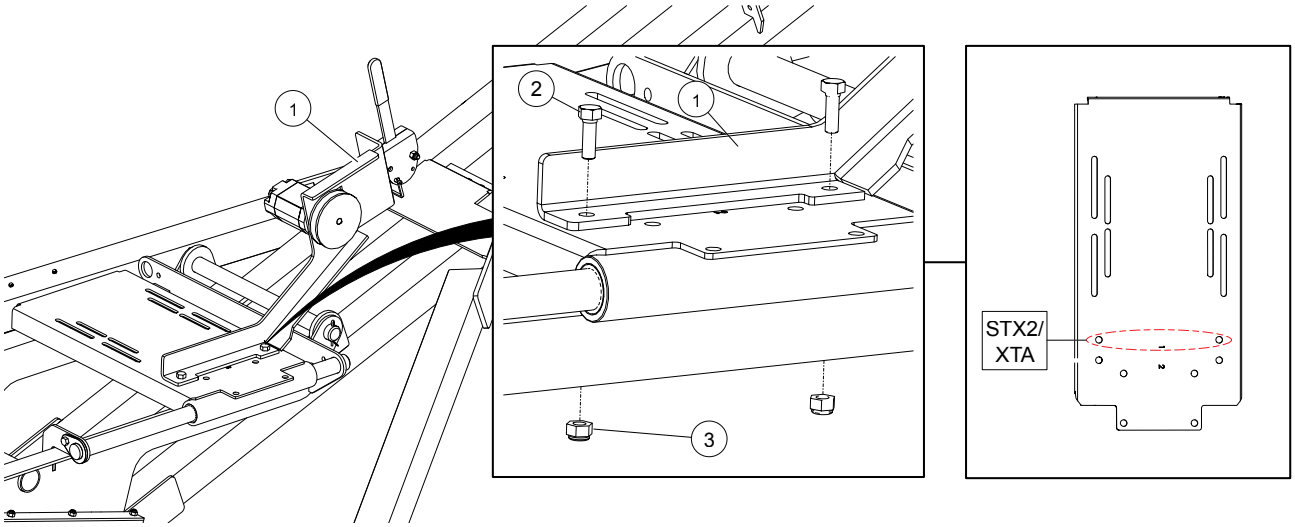

1	Hydraulic Pump Assembly	3	Lock Nut, 7/16"
2	Bolt, 7/16" x 1-1/4"		

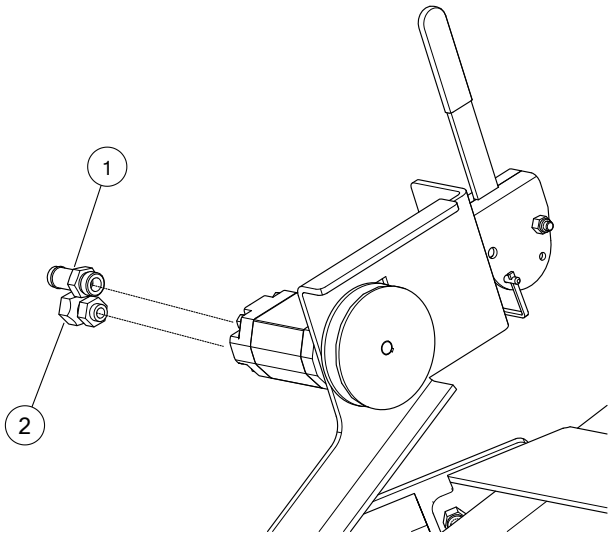

1	Steel Fitting, 3/4" HB x 10 MORB
2	Steel Fitting, 8 MORB x 1/2" FNPSM

4.21.4 Install the Electric Clutch

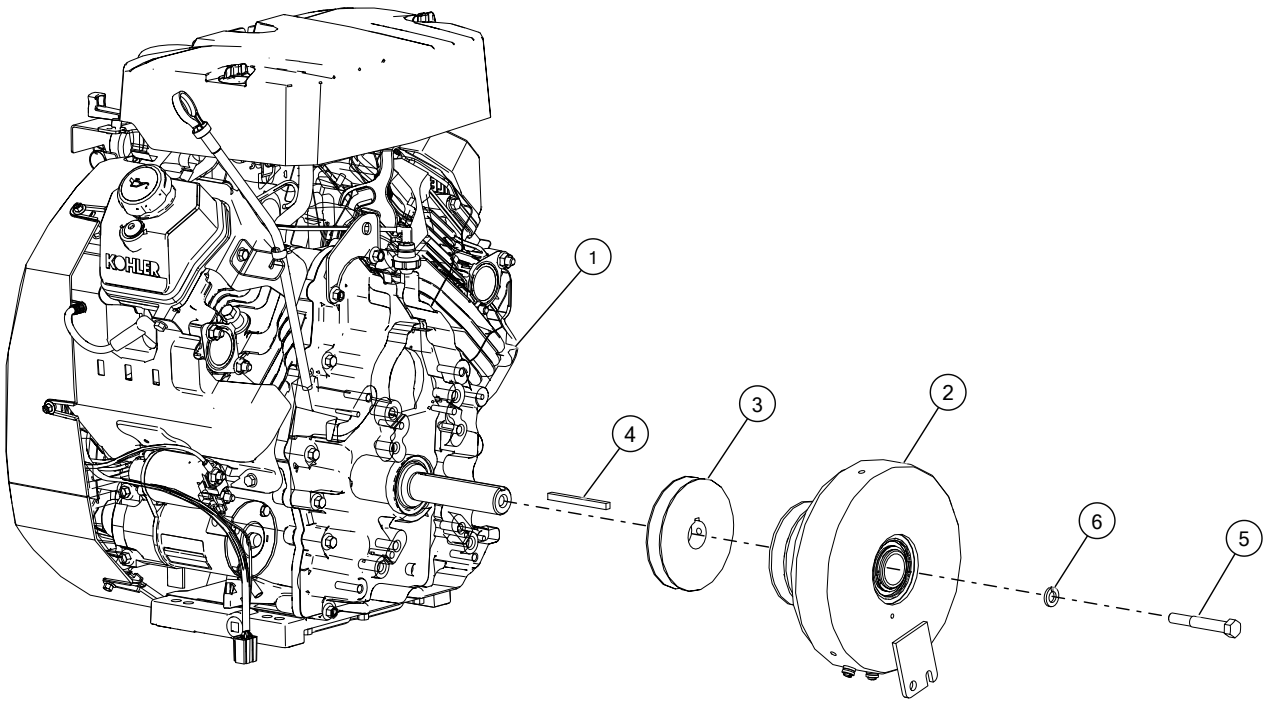

Assembly Note:			
• Apply anti-seize to the engine shaft where the electric clutch will slide on.			
1	Gas Engine Motor	4	Square Key, 1/4" x 3"
2	Electric Clutch, Triple	5	Bolt, 7/16" x 3"
3	Pump Pulley, 4-1/2" x 1-1/8" Single	6	Lock Washer, 7/16"

4.21.5 Install the Motor

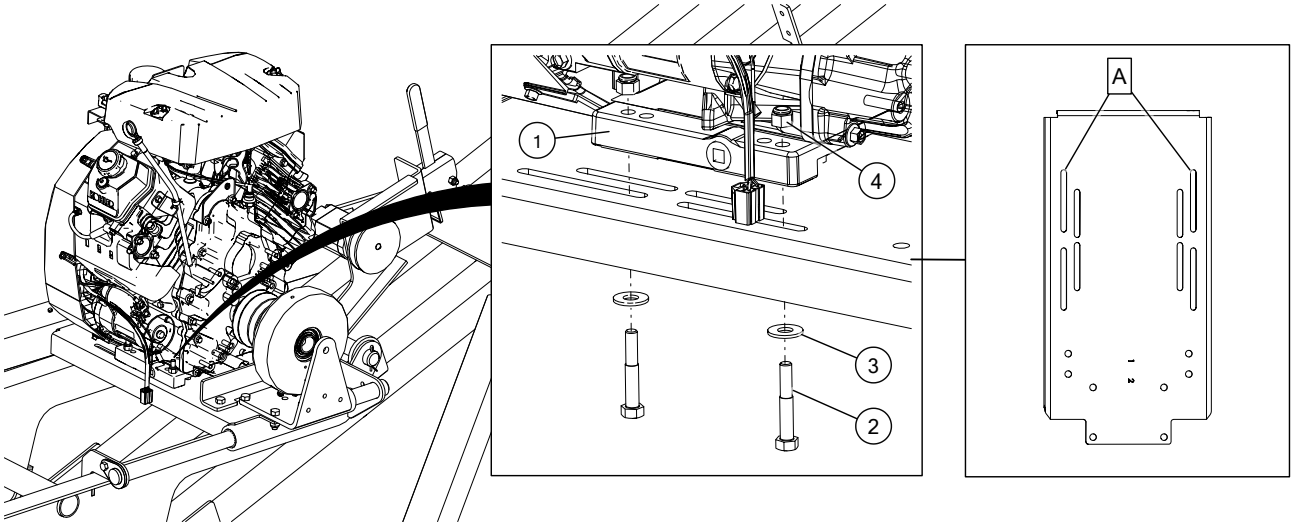

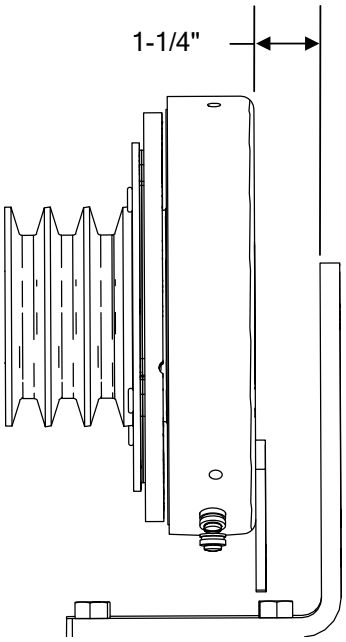

Assembly Notes:

- Place the motor so that the gap between the face of the electric clutch and the inside face of the guard attach bracket is 1-1/4".
- Install the exhaust pipe, muffler and muffler shield to the engine.
  - If using a Vanguard motor for installation, there is a possible interference with the (standard) muffler hitting the belt guards. If this happens, then please contact your local AGI dealer for an alternative.
- Perform all the engine wiring.
- Run a fuel hose from the brass fitting to the fuel filter and secure with hose clamps.

1	Gas Engine Motor
2	Bolt, 3/8" x 2-1/4"
3	Flat Washer, 3/8"
4	Lock Nut, 3/8"
A	Kohler, 38 HP EFI
	Vanguard, 37 HP EFI

4.21.6 Install the Guard Assembly

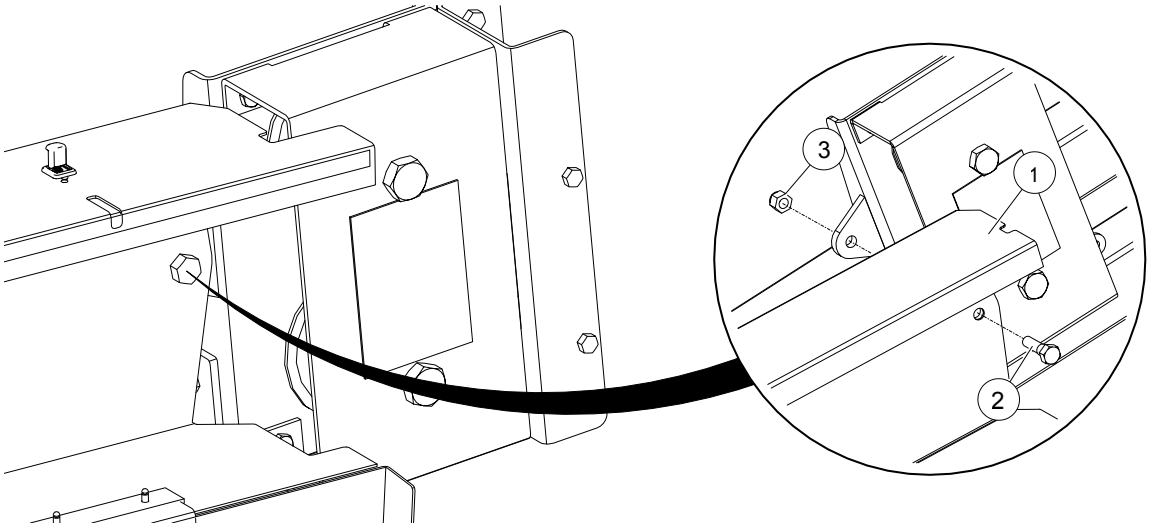

1	Bottom Guard Assembly	3	Lock Nut, 1/2"
2	Bolt, 1/2" x 1-3/4"		

4.21.7 Install the Belt

Pump Belt

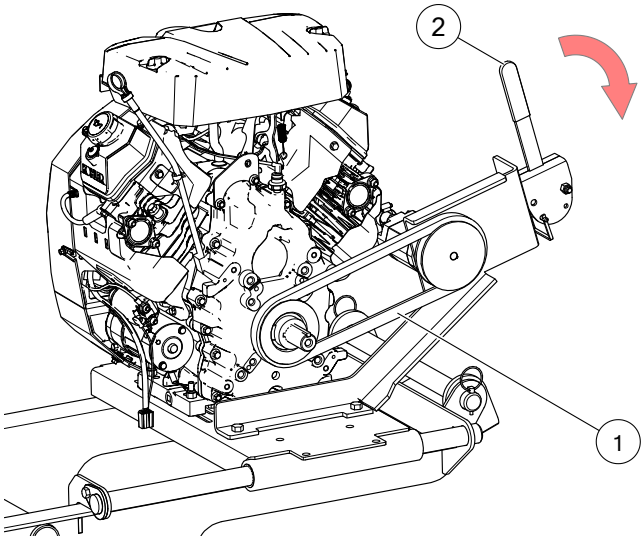

Assembly Note:

- Rotate the pump handle clockwise to apply tension to the pump belt and pull down the handle to lock the belt in place.

1	Pump Belt, BX35	2	Pump Handle

Drive Belt

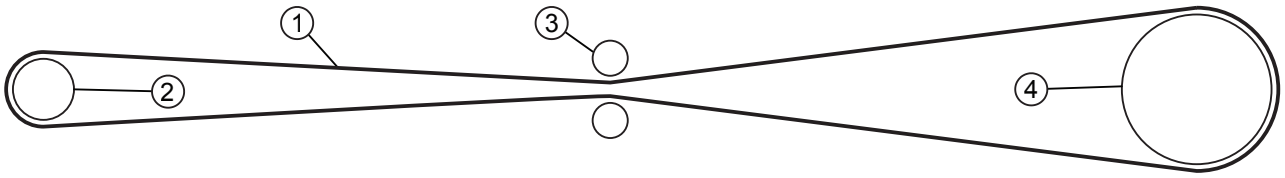

Assembly Note:

- The belt must run straight. Check the alignment of the pulleys and adjust if necessary.

1	Belt	3	Flat Idler Pulley
2	Engine Pulley	4	Gearbox Pulley

4.21.8 Install the Engine Pulley Guard

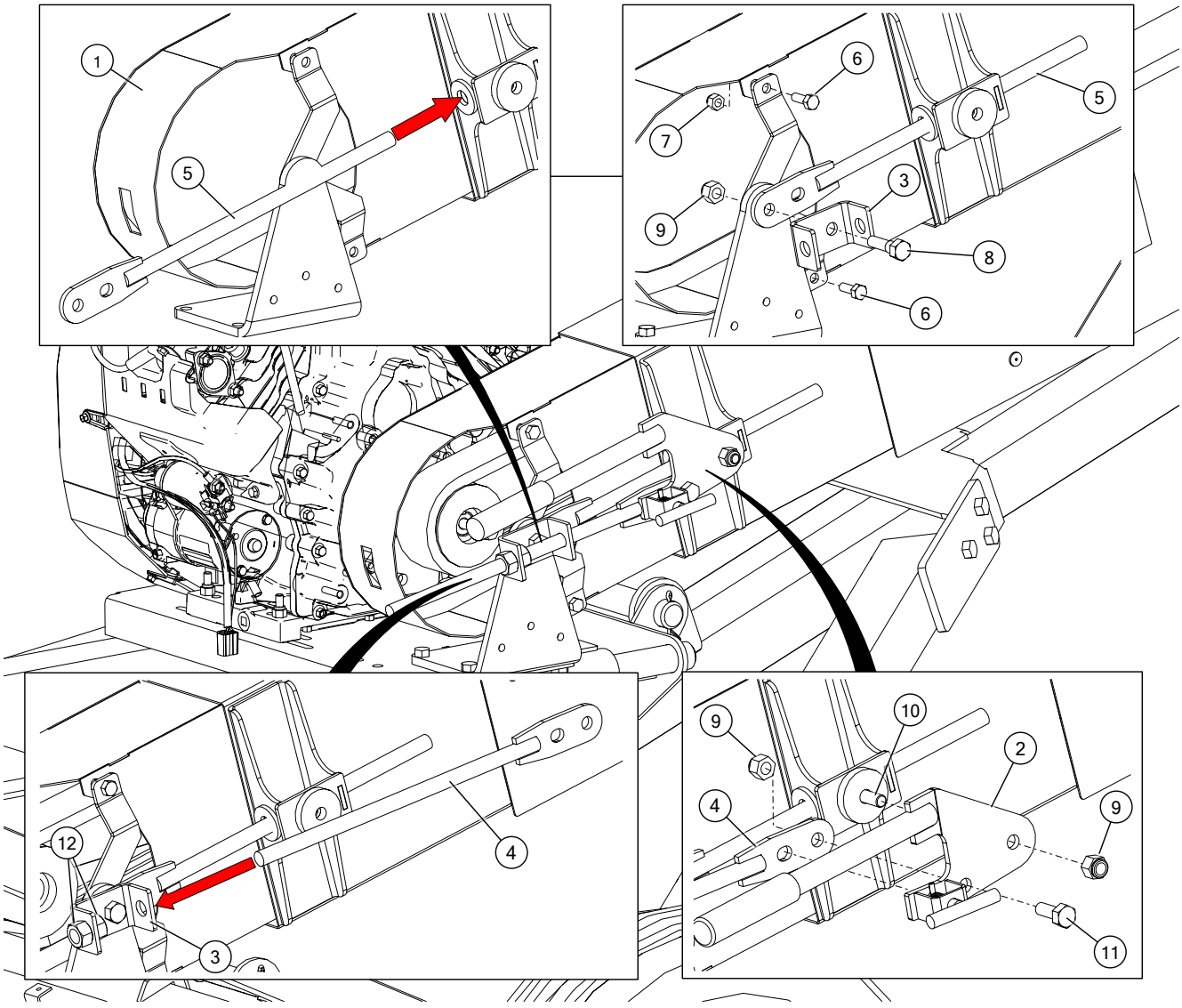

Assembly Note:

- Slip guard over the engine pulley and slide into the guard assembly.

1	Guard	7	Lock Nut, 3/8"
2	Manual Belt Engage Handle Assembly	8	Bolt, 1/2" x 1-3/4"
3	Manual Belt Engage Mount Bracket	9	Lock Nut, 1/2"
4	Manual Belt Engage Threaded Rod	10	Bolt, 1/2" x 1-1/2"
5	Manual Belt Engage Guide Rod	11	Bolt, 1/2" x 1-1/4"
6	Bolt, 3/8" x 1"	12	Hex Nut, 5/8"

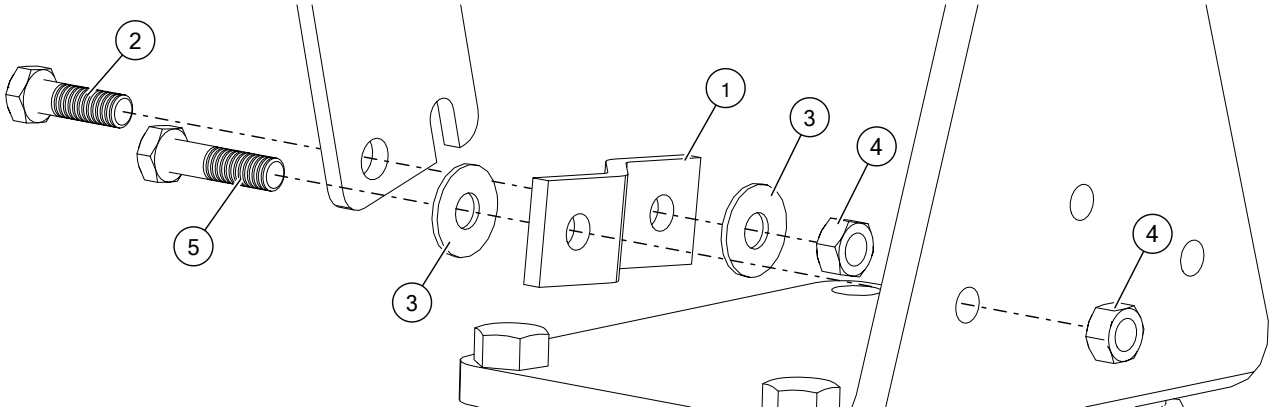

1	Clutch Stop	4	Lock Nut, 5/16"
2	Bolt, 5/16" x 1"	5	Bolt, 5/16" x 1-1/4"
3	Flat Washer, 5/16"		

4.21.9 Tension the Belt

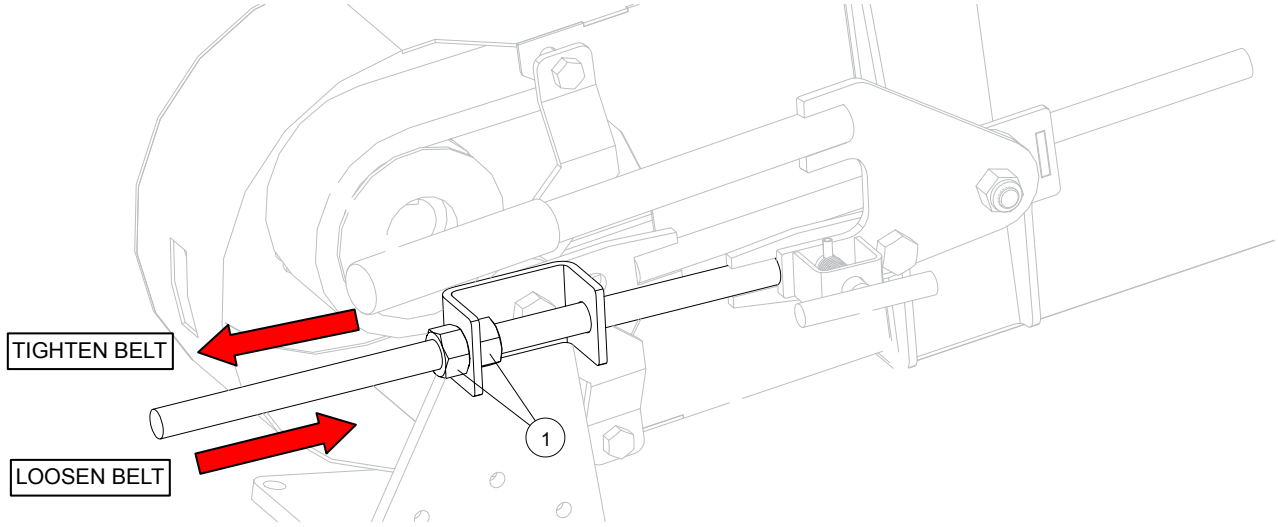

Assembly Notes:

- Use the two hex nuts to apply tension to the drive belt prior to closing the guard cover.
- Close the guard using the rubber draw latches after the belt has been tensioned.

1	Hex Nut, 5/8"

4.21.10 Install Fully Enclosed Guarding

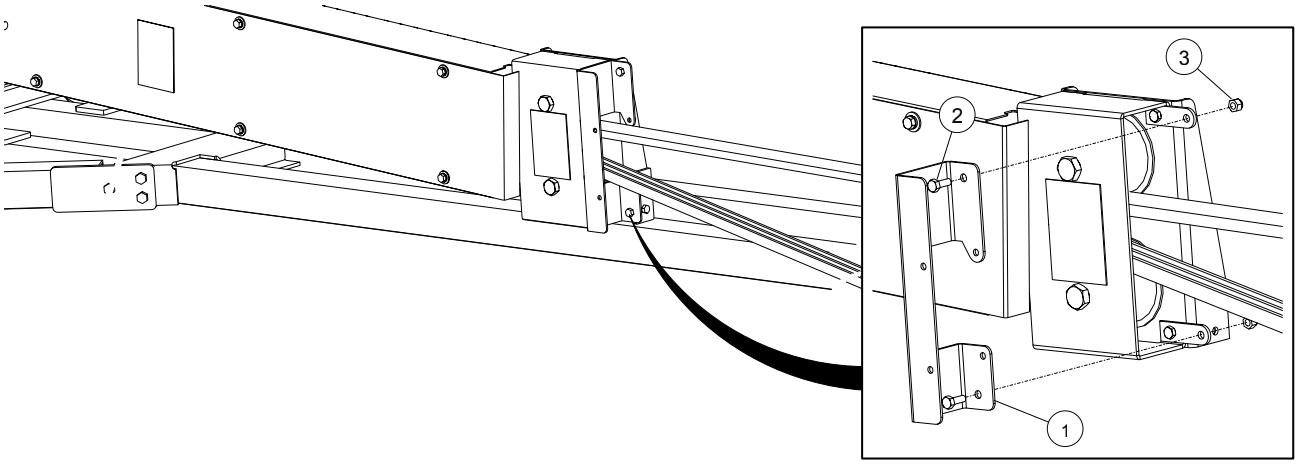

1	Closed Guard Upper Channel Mount	3	Lock Nut, 3/8"
2	Bolt, 3/8" x 1"		

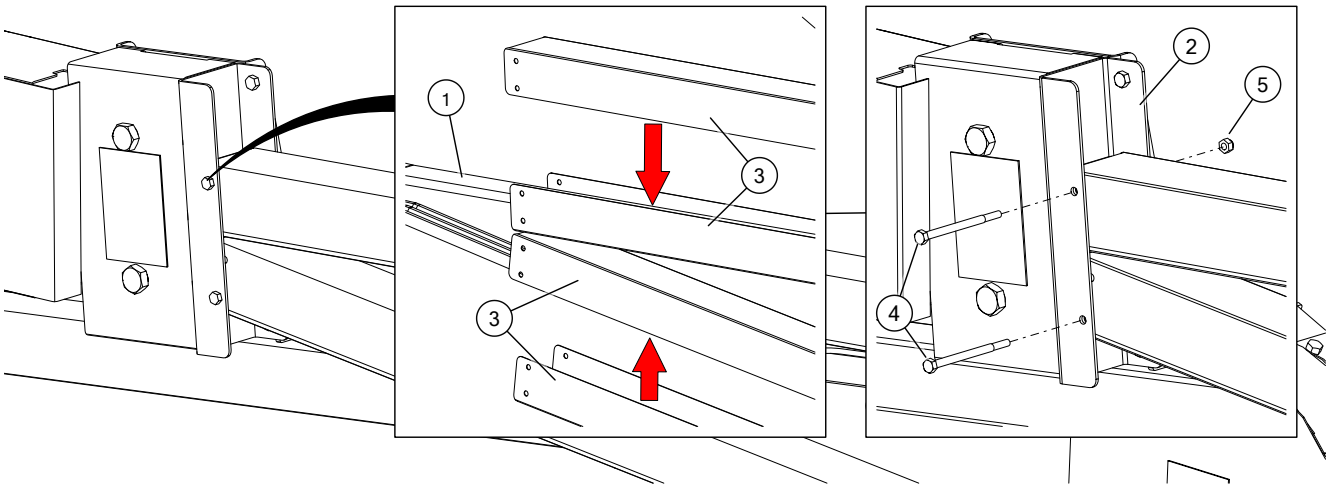

1	Belt	4	Bolt, 5/16" x 4-1/2"
2	Closed Guard Upper Channel Mount	5	Lock Nut, 5/16"
3	Closed Guard Channel		

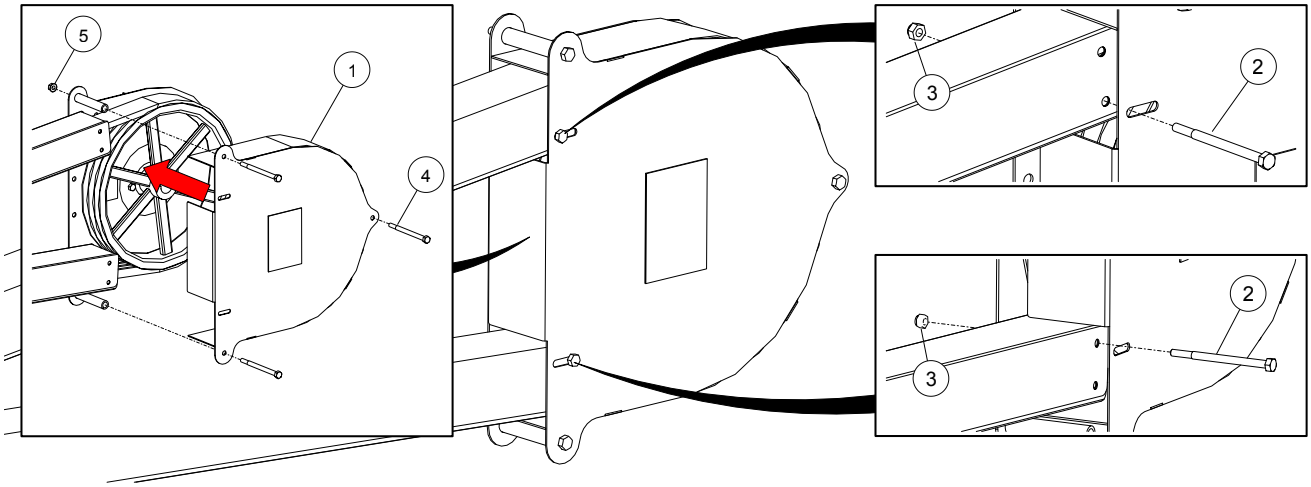

1	Pulley Cover Guard	4	Bolt, 3/8" x 5"
2	Bolt, 5/16" x 4-1/2"	5	Whiz Nut, 3/8"
3	Lock Nut, 5/16"		

4.21.11 Wire the Electric Clutch

1. Remove (cut off) the clutch harness connector that includes a connection clip on one side.
2. Prepare the cut end for connection by trimming harness jacket and wire insulation as needed, crimp ring terminals to the two wires on that end, and connect them to the screw terminals on the clutch (it does not matter which wire connects to which terminal).
3. Complete the remaining electrical connections, using 14 gauge crimp connectors (splice, spade, and ring terminal) as needed:
   - connect the white switch cable wire to one of the clutch harness connector terminals;
   - connect the black switch cable wire to the fuse, and from there to 12 VDC power;
   - connect the remaining clutch harness connector terminal to ground.
4. Test the switch to ensure that the electric clutch engages and disengages properly.
5. Use electrical tape to seal and secure any electrical connections that might require weather-proofing.
6. Run the electrical cable through the lower frame to prevent accidental disconnection of wiring if the cable is pulled tight.
7. Secure the cable when not in use.

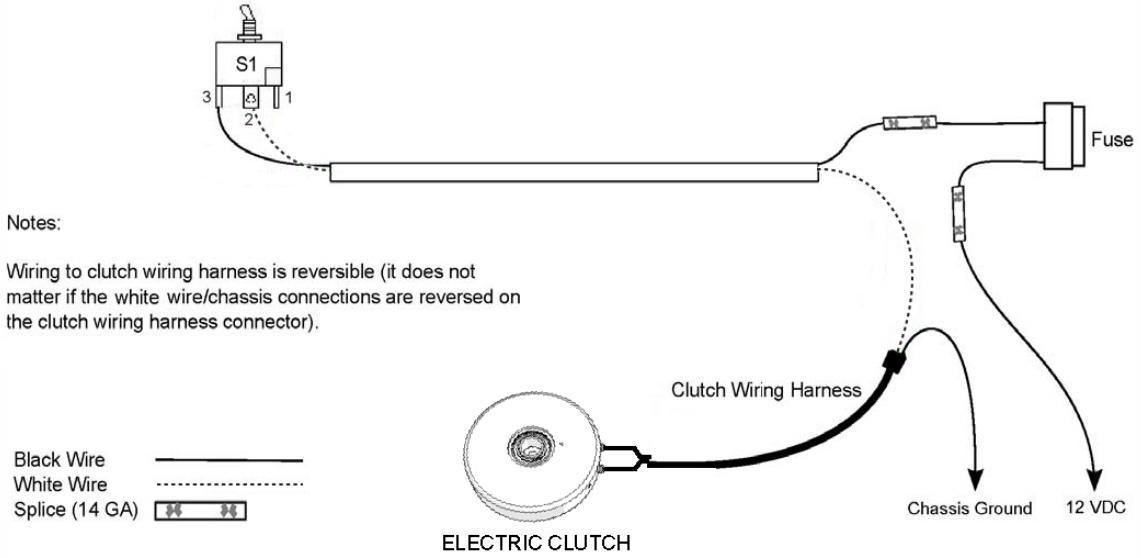

4.22. Install the Lift Cable

1. Attach the cable to the cable attach rod welded to the bottom of the track by wrapping it around the rod and doubling-back about 7" (18 cm) of cable.
2. Secure the cable in place by installing and tightening two 1/4" cable clamps.
   a. Apply the first clamp 6" (15.2 cm) from the cable loop with u-bolt over the dead end. Live end rests in clamp saddle. Tighten nuts evenly to recommended torque of 15 ft·lb.
   b. Apply second clamp as close to loop as possible with the u-bolt over the dead end. Live end rests in clamp saddle. Apply tension and tighten nuts evenly to recommended torque of 15 ft·lb.
3. Run cable between the track stop and the auger tube.
4. Thread the cable over and around the track shoe. Make certain it is properly seated in the cable groove.

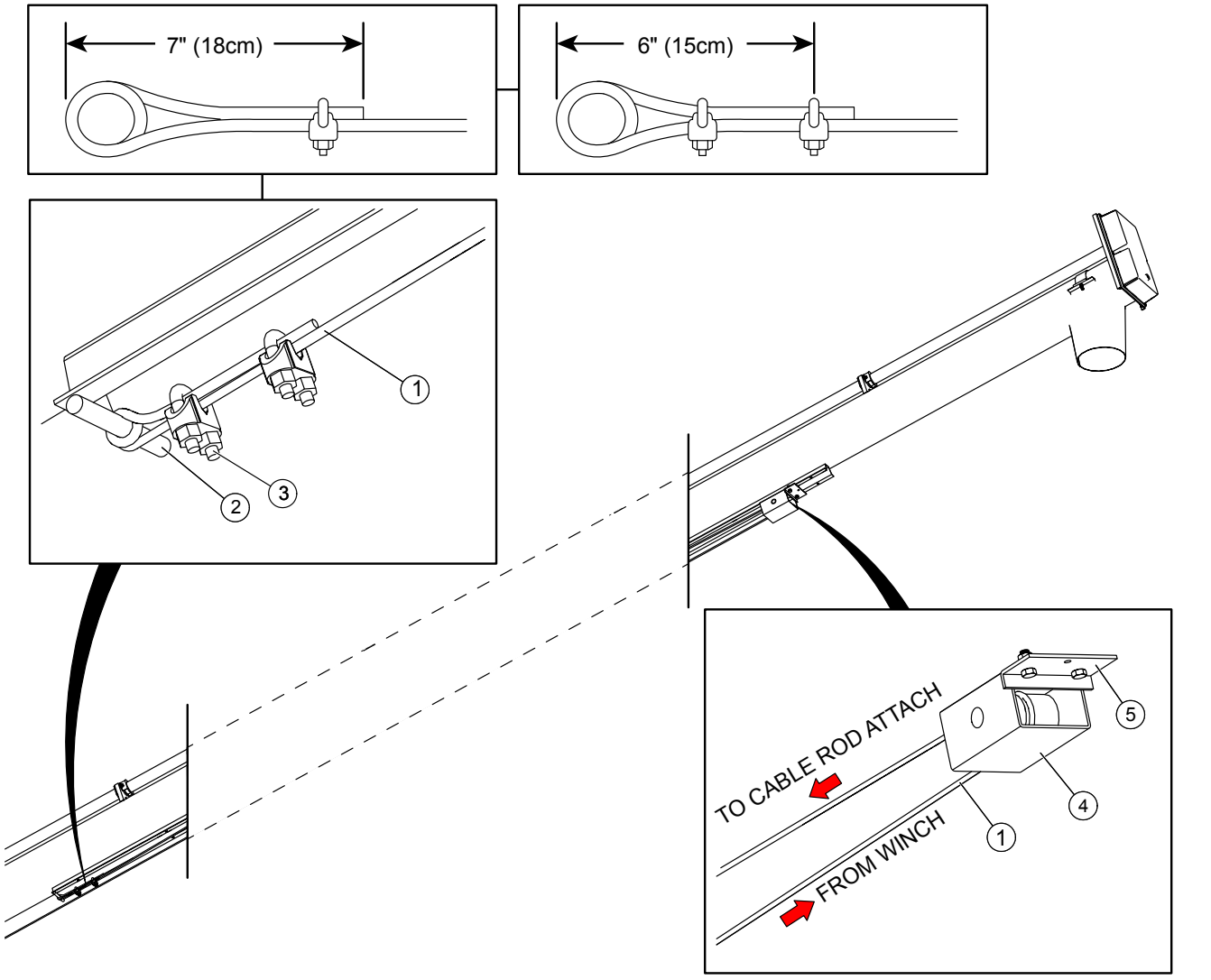

1	Lift Cable	4	Track Shoe
2	Cable Attach Rod	5	Track Stop
3	Cable Clamp		

4.23. Install the Hydraulic Winch

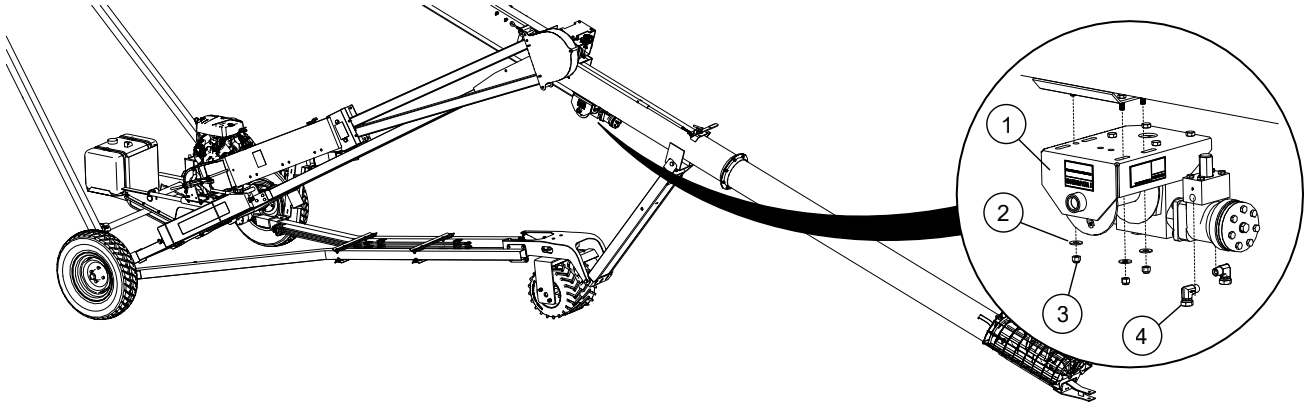

1	Hydraulic Winch Assembly	3	Lock Nut, 3/8"
2	Flat Washer, 3/8"	4	Steel Fitting, 90, 6 MNPT x 6 FNPSM

4.24. Connect the Lift Cable

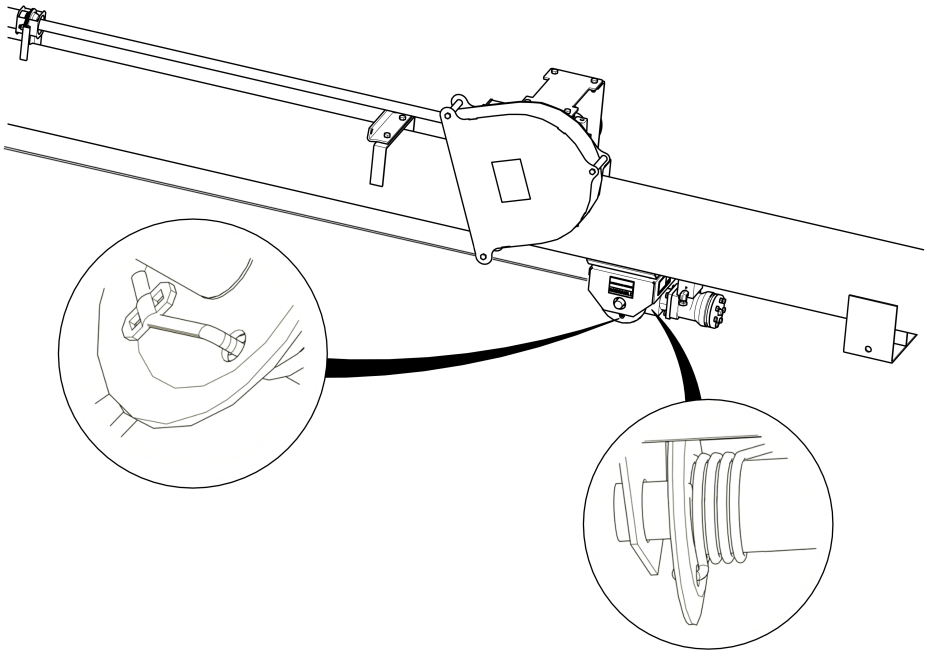

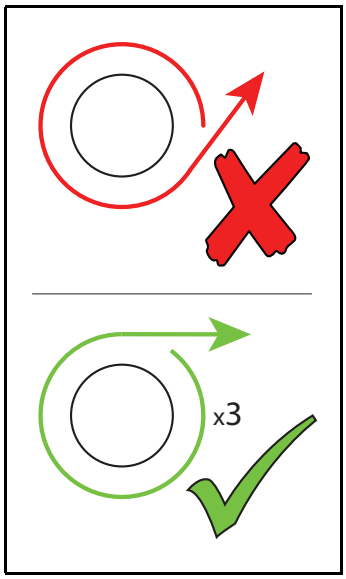

Important

Make sure there is a minimum of three wraps of cable on the winch drum when the auger is in transport position.

1. Pull cable to the winch.
2. Wrap the cable over and around the winch drum.
3. Thread the cable through the hole in the side of the winch drum and secure it using a cable clamp.

4.25. Install the Hydraulic Oil Tank

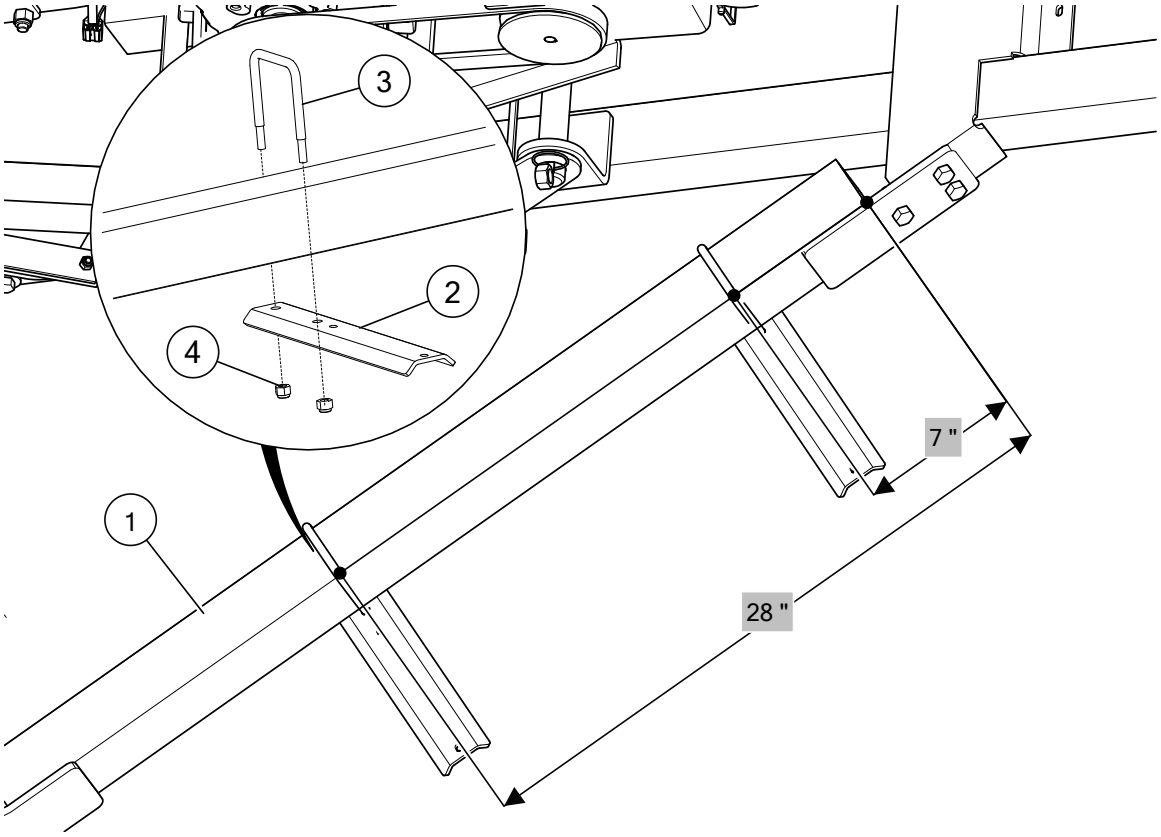

Assembly Notes:

- Place the first hydraulic tank mount 7" from the end of the tube.
- Place the second hydraulic tank mount 28" from the end of the tube.

1	Lower Support Frame, Right	3	Square U-Bolt, 3/8" x 3-1/16" x 4"
2	Hydraulic Tank Mount	4	Lock Nut, 3/8"

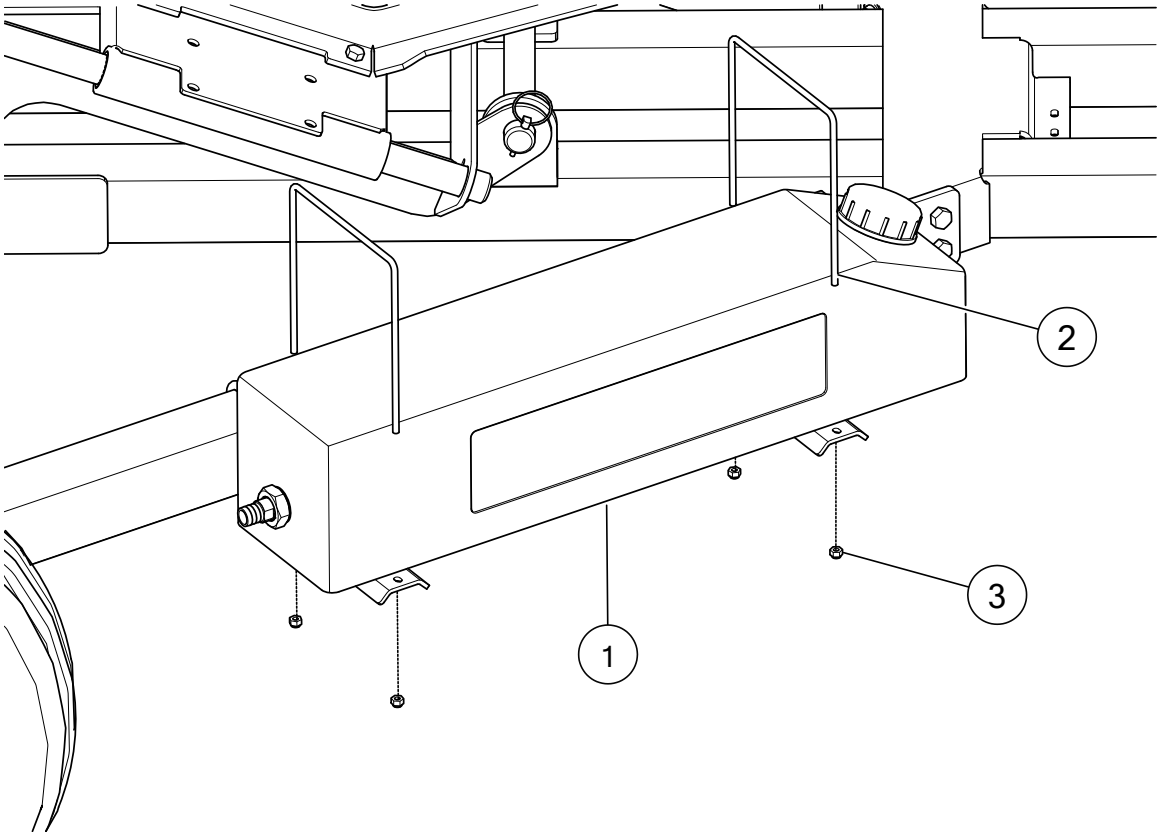

Assembly Note:

- Ensure the cap is located on the raised side.

1	Hydraulic Tank	3	Lock Nut, 1/4"
2	Square U-Bolt, 1/4" x 7-1/4" x 7-5/8"		

4.26. Install the Hydraulic Filter

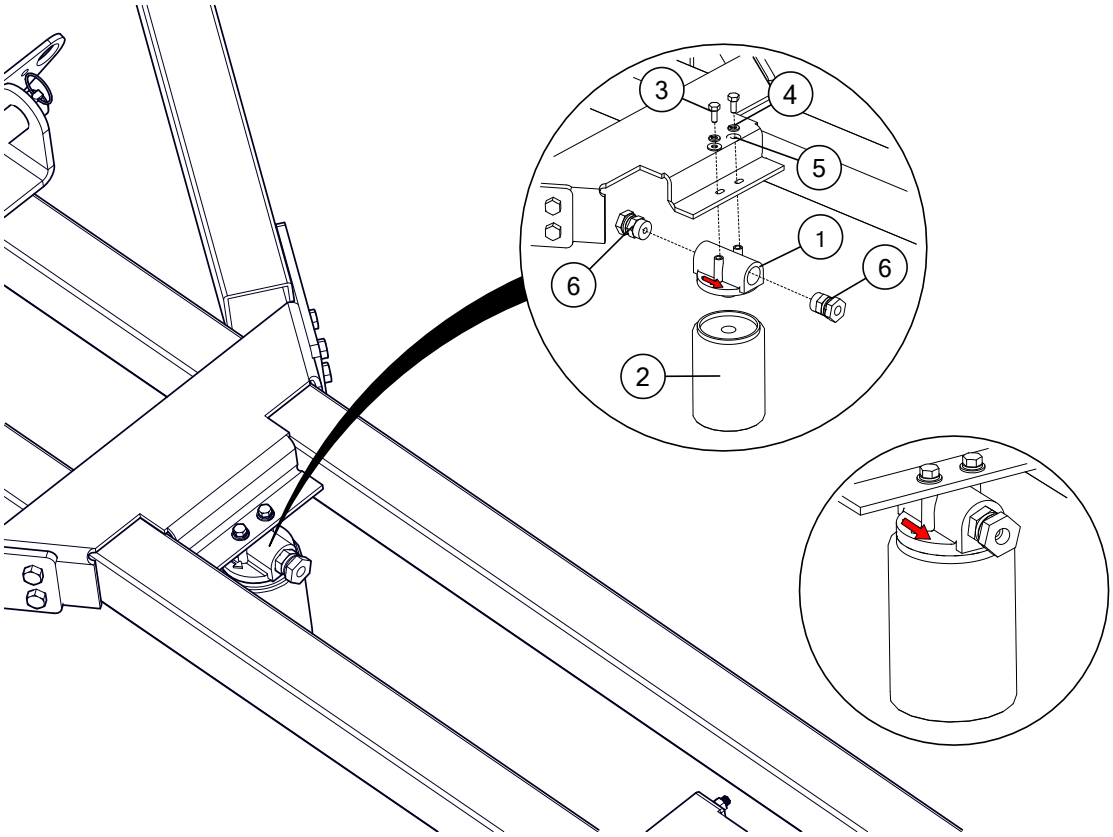

Assembly Note:

- The hydraulic hoses MUST be installed to ensure that the oil flows to the tank in the same direction as the arrow on the filter head.

1	Hydraulic Filter Head	4	Lock Washer, 1/4"
2	Hydraulic Filter	5	Flat Washer, 1/4"
3	Bolt, 1/4" x 3/4"	6	Steel Fitting, 3/4" MNPT x 1/2" FNPSM

4.27. Install the Hydraulic Manifold

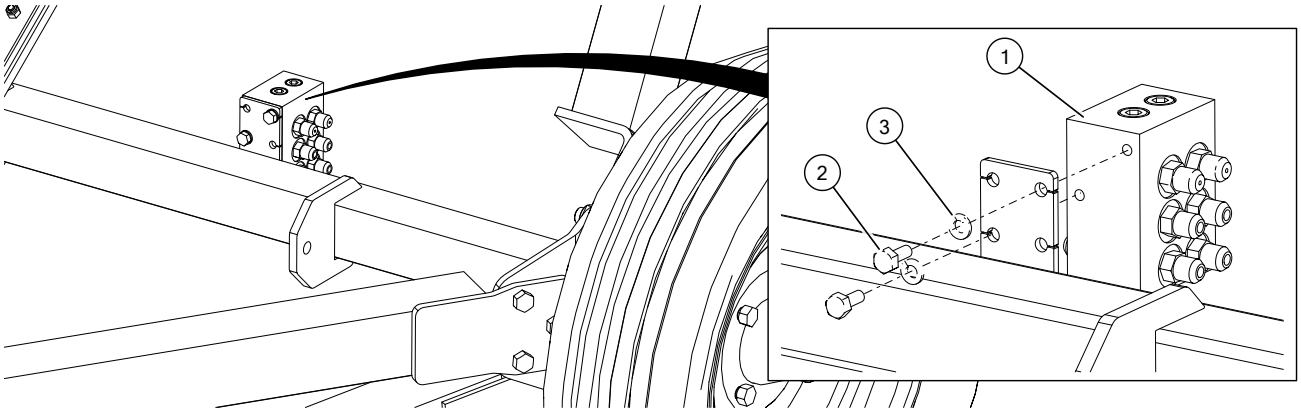

1	Hydraulic Manifold	3	Lock Washer, 5/16"
2	Bolt, 5/16" x 3/4"		

4.28. Install the Undercarriage

Connecting the SP Reach Arms to the Mover Assembly

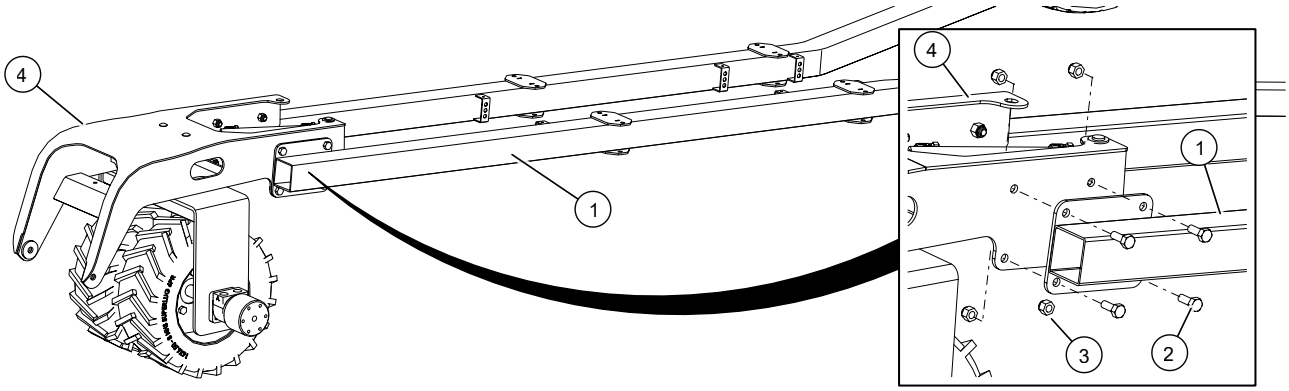

1	AWD SP Reach Arm	3	Lock Nut, 1/2"
2	Bolt, 1/2" x 1-1/4"	4	AWD SP Mover Assembly

Connecting the SP Reach Arms to the Axle

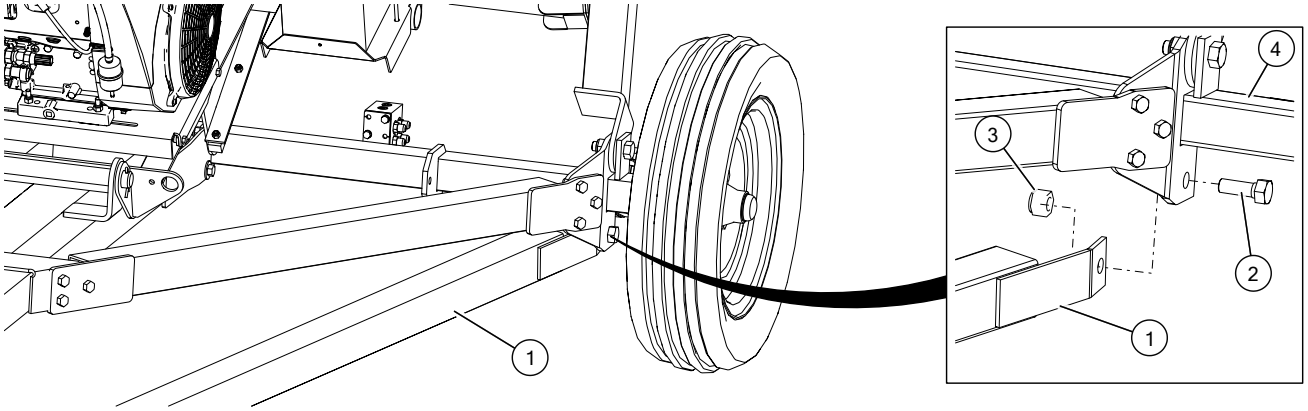

Assembly Note:

- This connection must rotate - do not over-tighten.

1	AWD SP Reach Arm	3	Lock Nut, 3/4"
2	Bolt, 3/4" x 2"	4	Axle

Installing the SP Reach Arm Tie Braces

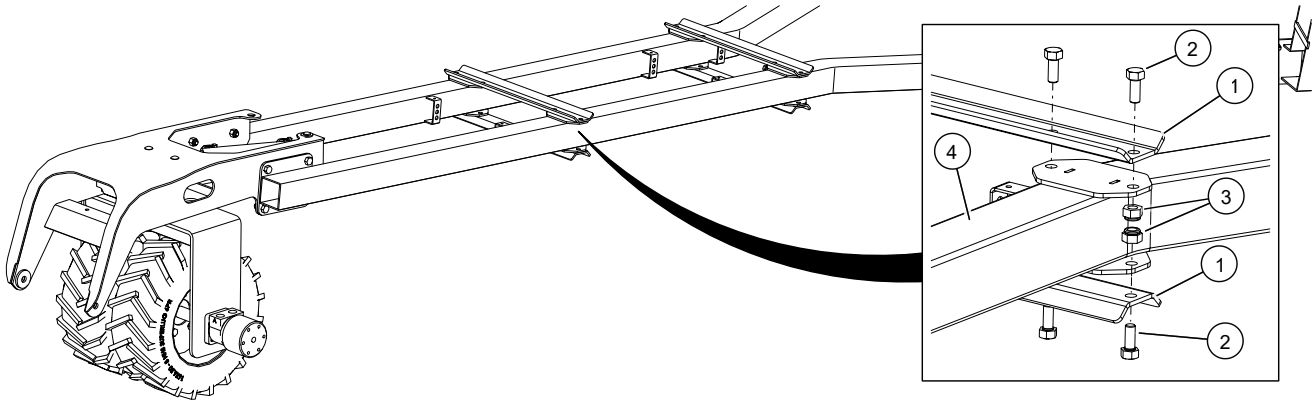

1	Tie Brace	3	Lock Nut, 7/16"
2	Bolt, 7/16" x 1"	4	AWD SP Reach Arm

Installing the Slider Assembly onto the Tube and Mover Assembly

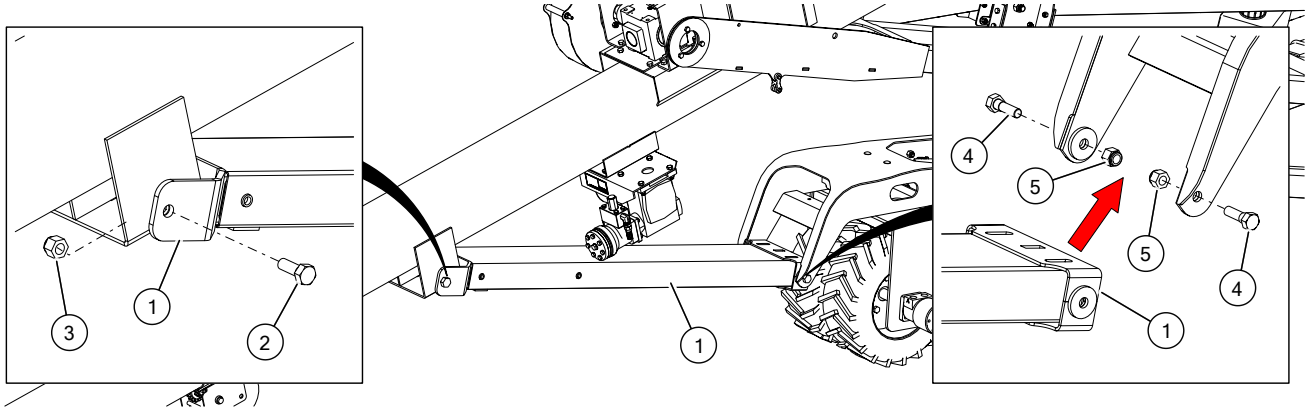

Assembly Note:

- These joints must pivot - do not over-tighten.

1	AWD Mover Slider Assembly	4	Bolt, 5/8" x 2"
2	Bolt, 3/4" x 2"	5	Lock Nut, 5/8"
3	Lock Nut, 3/4"		

Installing the Controls Tower

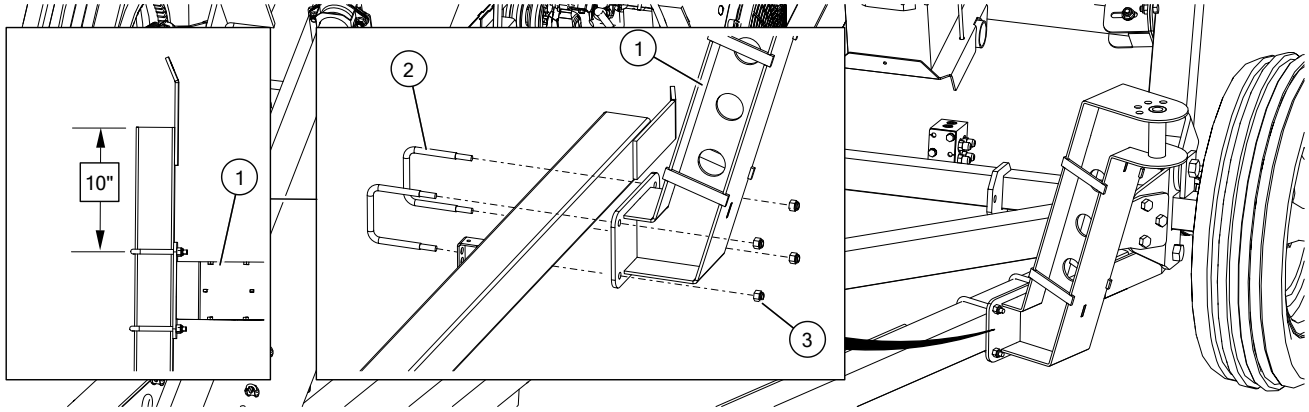

Assembly Notes:

- Install the tower 10" from the end of the SP reach arm tube.
- Install the tower on the right SP reach arm (looking from the intake, towards the discharge).

1	Controls Tower	3	Lock Nut, 3/8"
2	Square U-Bolt, 3/8" x 3-1/16" x 4"		

Installing the Mover Controls Assembly

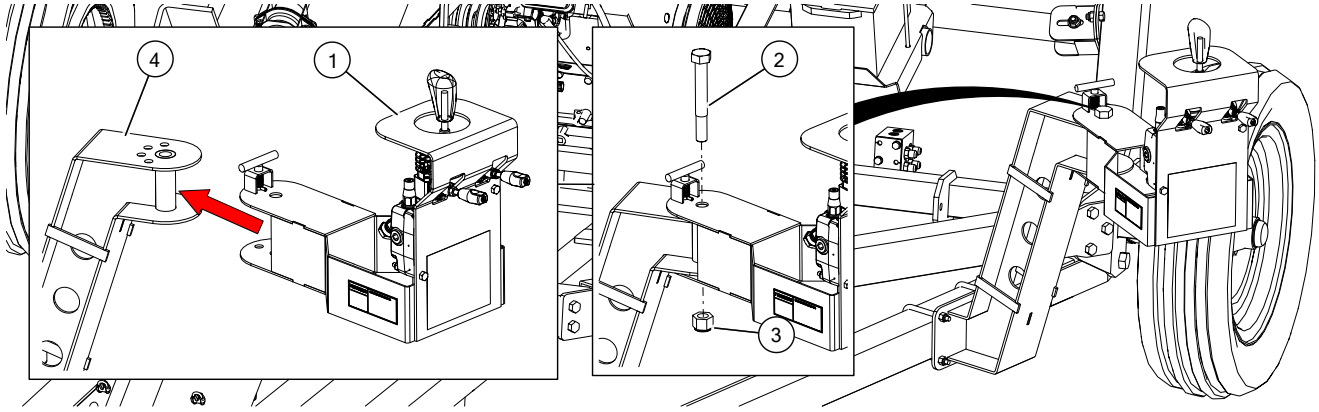

Assembly Note:

- This connection must rotate - do not over-tighten.

1	Mover Controls Assembly	3	Lock Nut, 3/4"
2	Bolt, 3/4" x 5-1/2"	4	Controls Tower

Installing the Bent Steel Hydraulic Lines

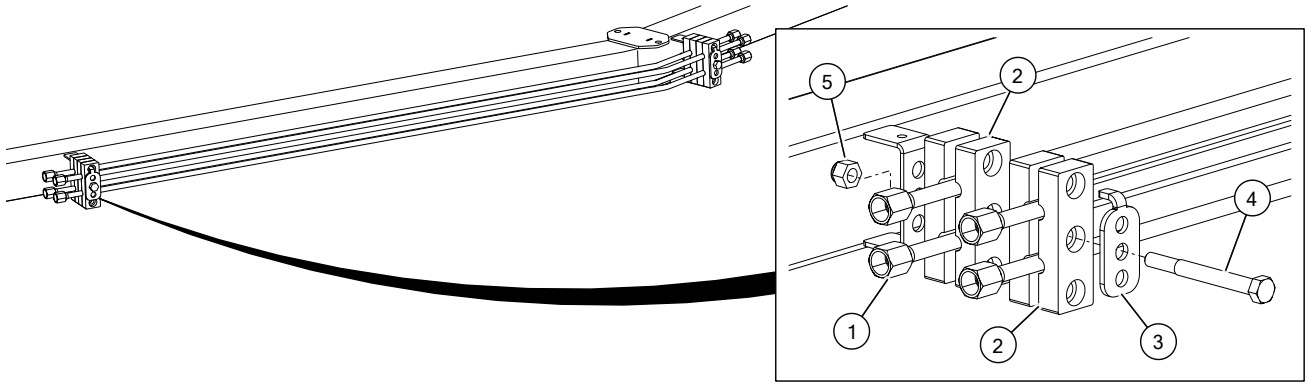

Assembly Notes:

- Install on the same side as the controls.
- Install clamp bracket with the bend tab pointing inside of the bolt hole.

1	Hydraulic Steel Line, Bent	4	Bolt, 3/8" x 3-1/2"
2	Double Tube Clamp	5	Lock Nut, 3/8"
3	Hydraulic Tube Clamp Bracket		

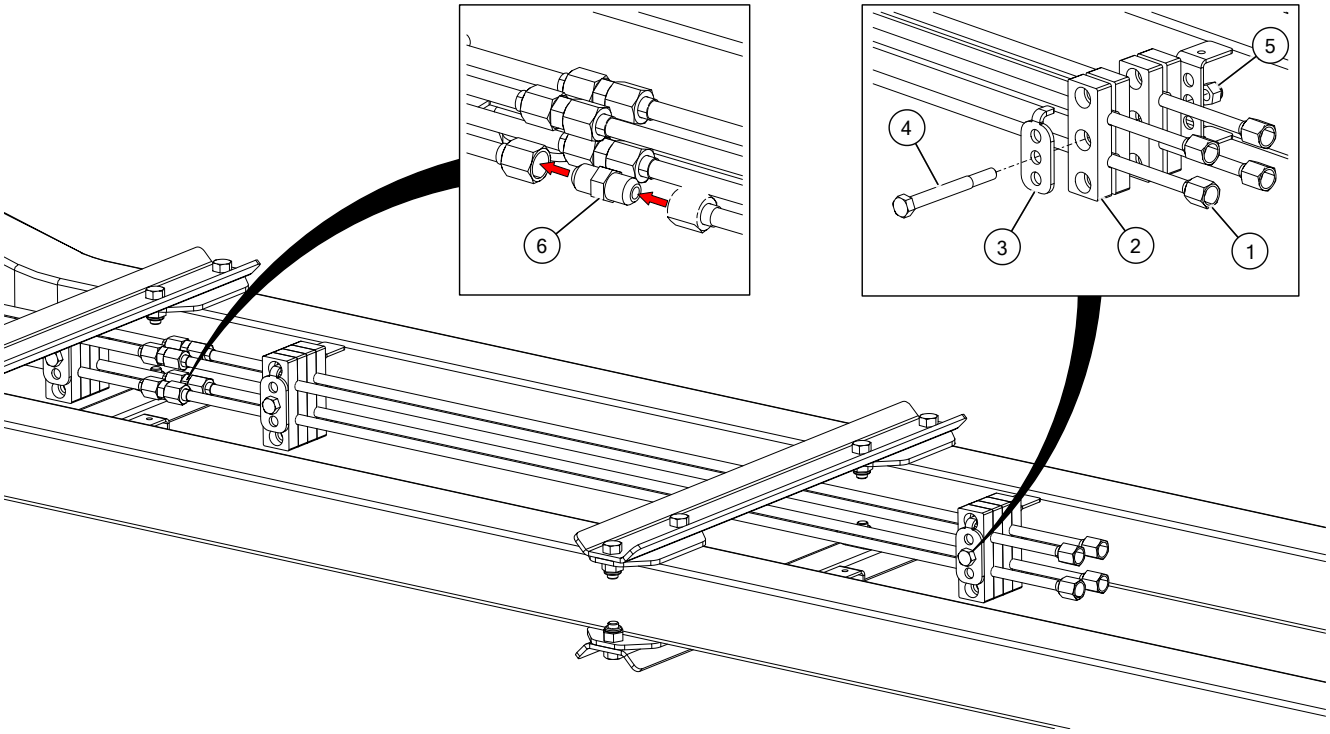

Assembly Notes:

- Install on the same side as the controls.
- Install clamp bracket with the bend tab pointing inside of the bolt hole.

1	Hydraulic Steel Line, Straight	4	Bolt, 3/8" x 3-1/2"
2	Double Tube Clamp	5	Lock Nut, 3/8"
3	Hydraulic Tube Clamp Bracket	6	Straight Adapter

Installing the Straight Hydraulic Steel Lines onto the Axle

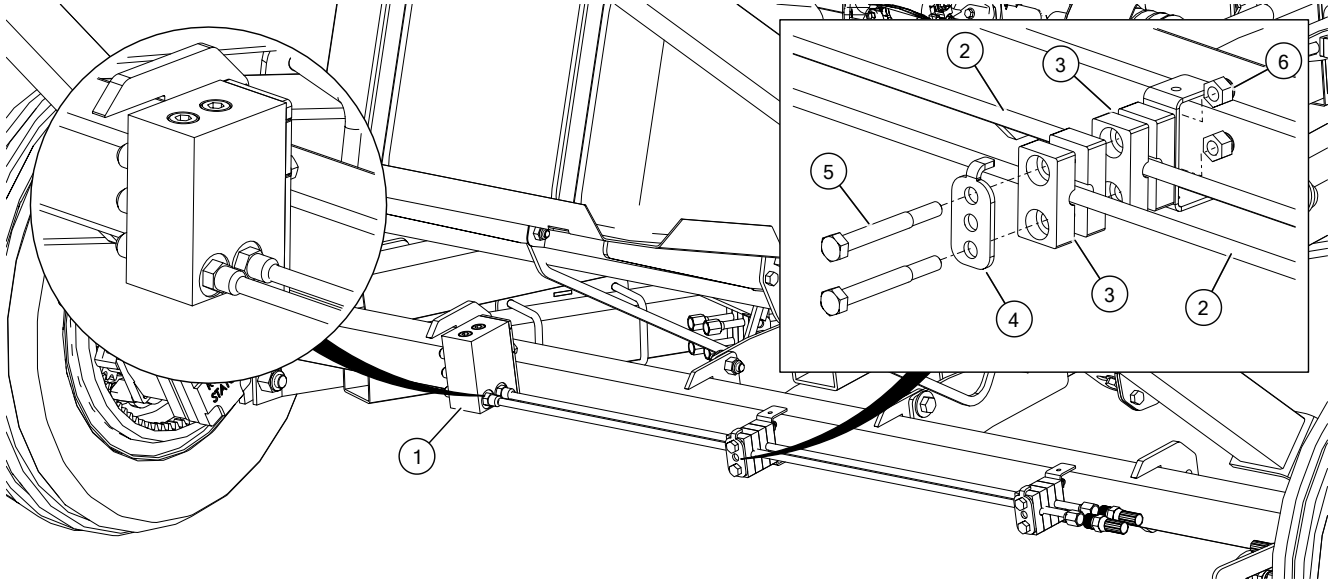

Assembly Note:

- Install the clamp bracket with the bend tab pointing towards the axle.

1	Hydraulic Manifold	4	Hydraulic Tube Clamp Bracket
2	Hydraulic Steel Line, Straight	5	Bolt, 3/8" x 3-1/4"
3	Single Tube Clamp	6	Lock Nut, 3/8"

4.29. Install the Hydraulic Adapters

Installing Adapters at the Valve

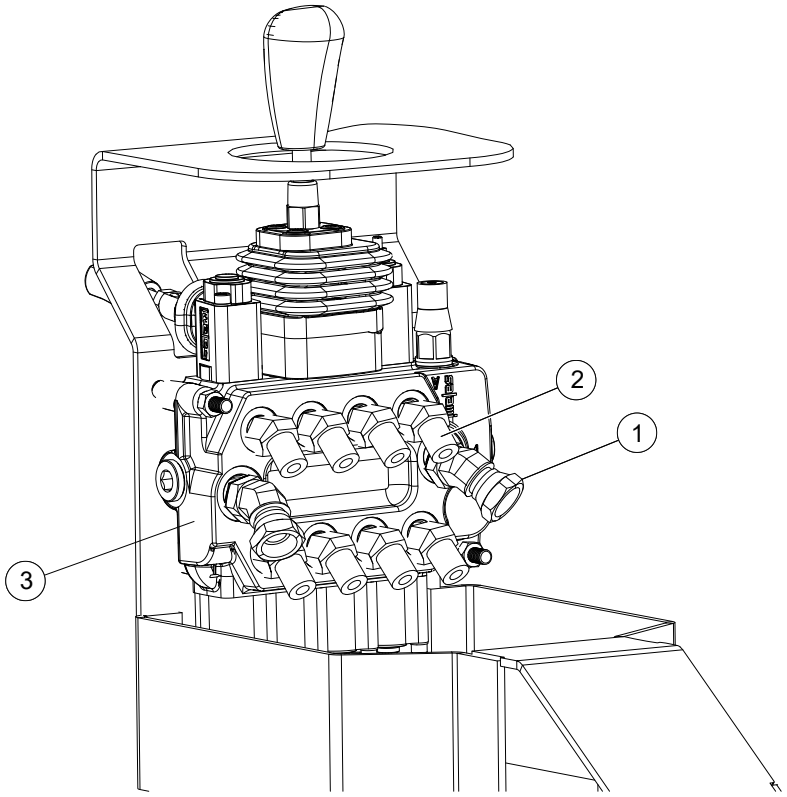

1	Steel Fitting, 45, 8 MORB x 1/2 FNPSM	3	Hydraulic Valve
2	Steel Fitting, 45, 6 MORB x 6 MJIC		

Installing Adapters at the Hydraulic Motors

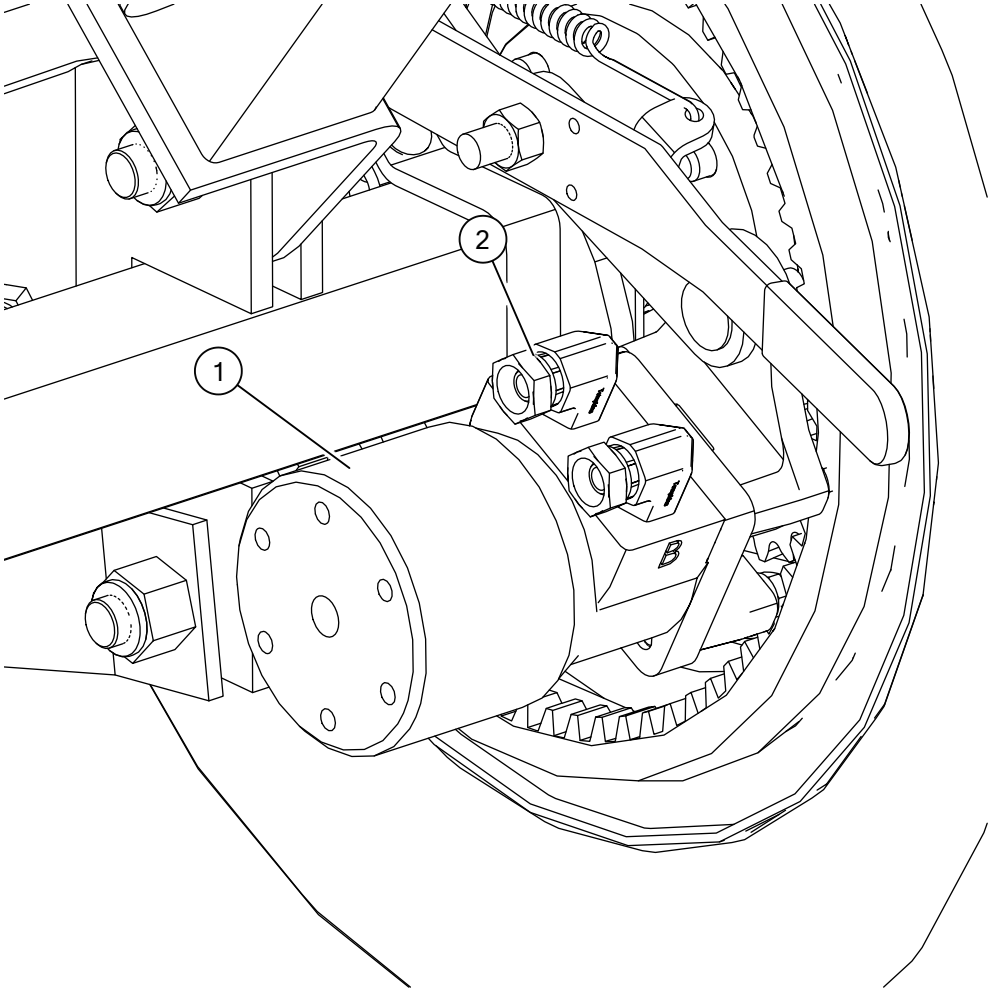

1	Hydraulic Motor	2	Steel Fitting, 90, 8 MNPT x 6 FNPSM

Installing Adapters at the Hydraulic Winch

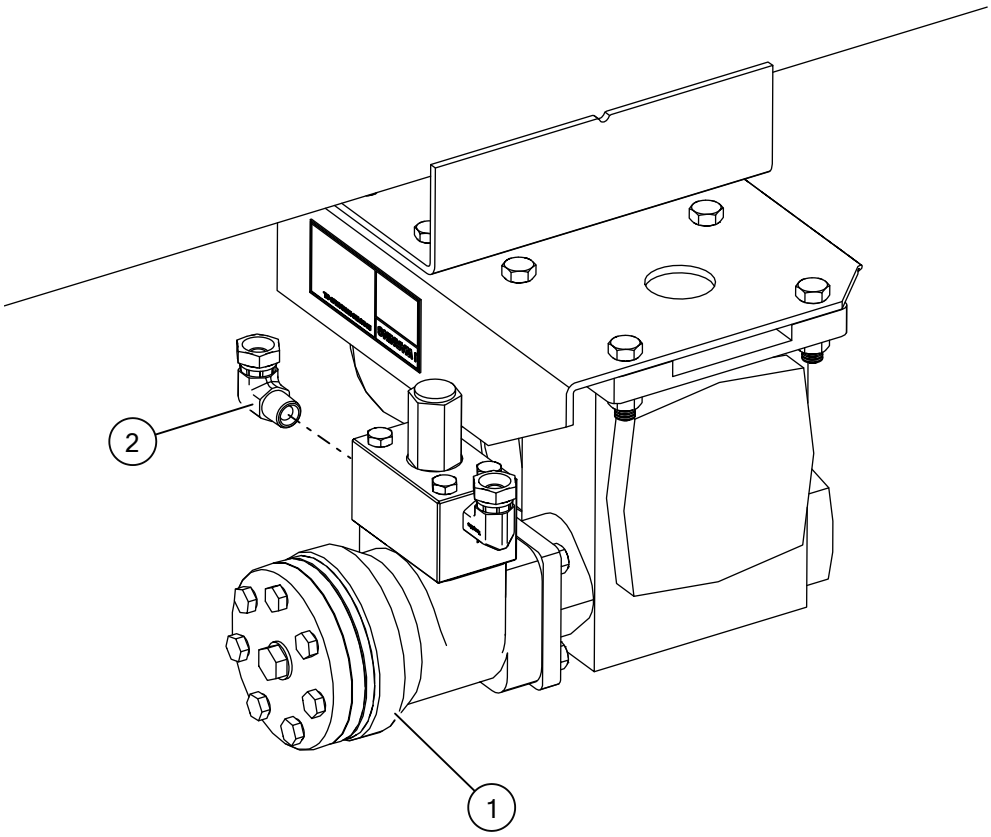

1	Hydraulic Winch	2	Steel Fitting, 90, 6 MNPT x 6 FNPSM

Installing Adapters at the Steering Cylinder

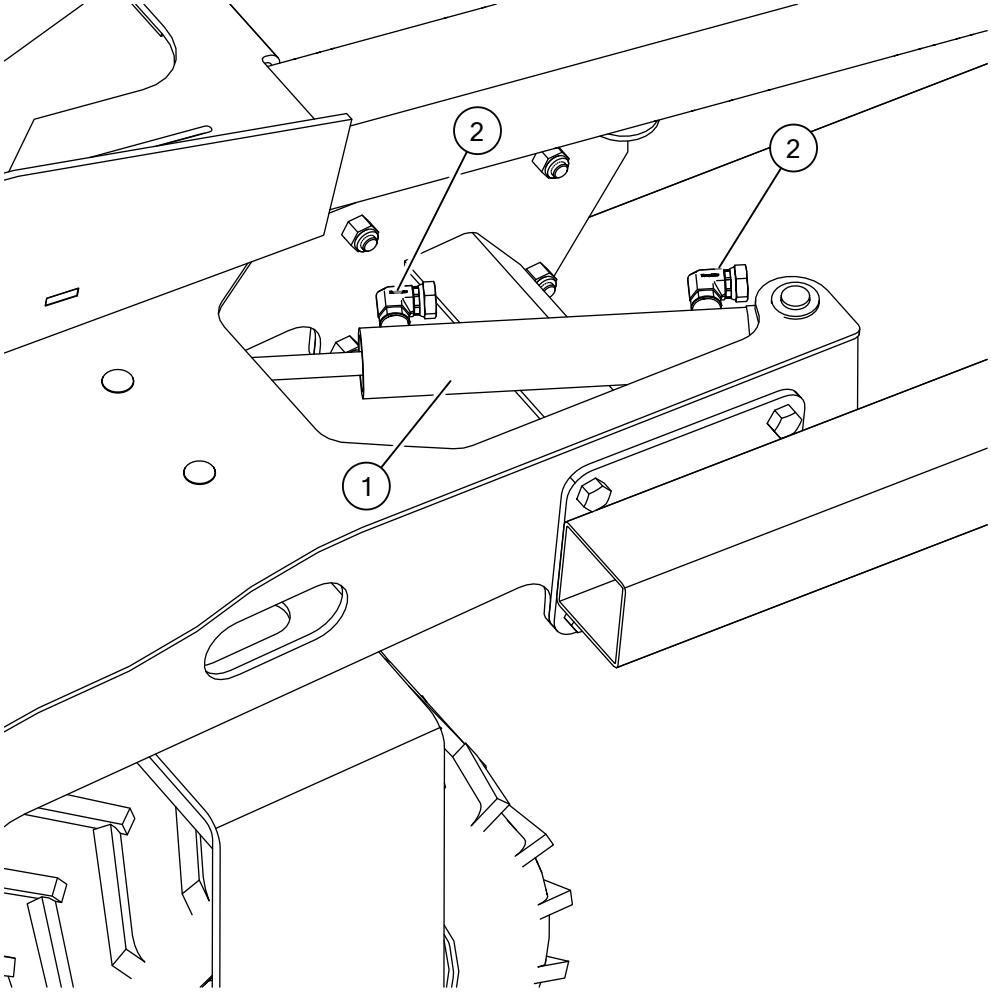

1	Mover Steering Cylinder	2	Steel Elbow, 90, 6 MORB x 3/8 NPSM

4.30. Attach the Transport Chain

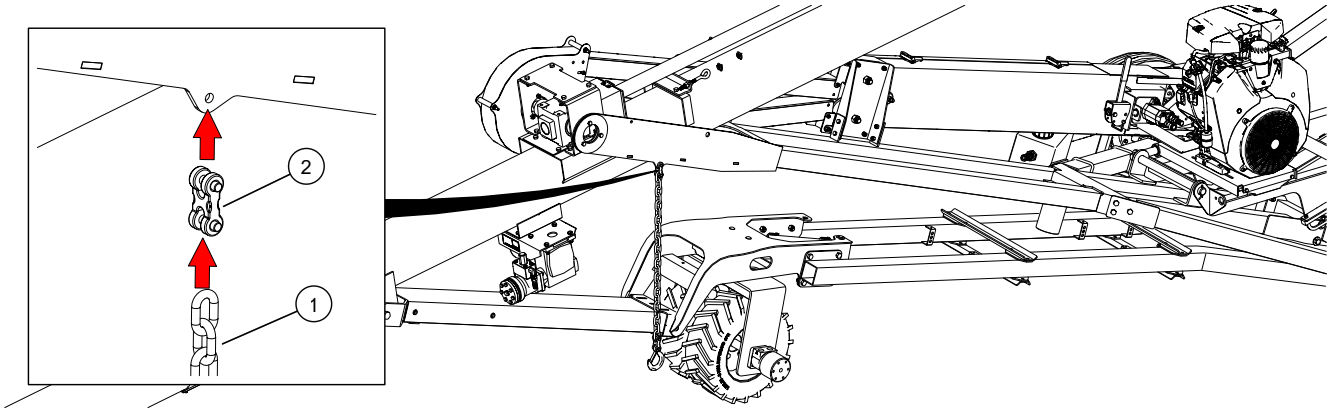

Assembly Note:

If necessary, the transport chain assembly can be shortened.

- Remove mid link from chain.
- Attach mid link to the appropriate chain link.

1	Transport Chain	2	Mid Link

4.31. Attach the Hydraulic Hoses

Hydraulic Hose Routing

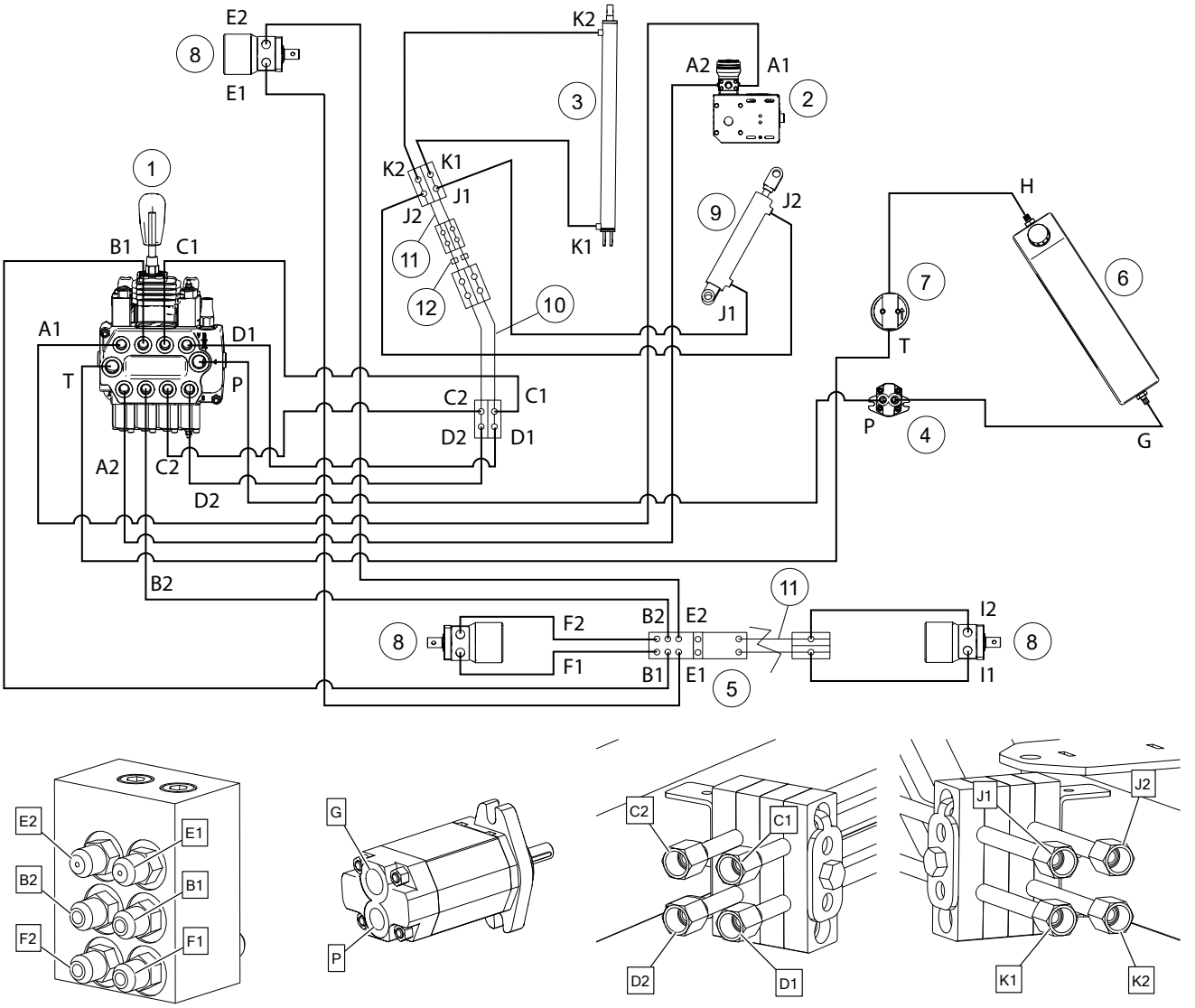

Hydraulic Components

1	Hydraulic Valve	7	Oil Filter
2	Hydraulic Winch	8	Drive Motor
3	Hydraulic Cylinder, Slider	9	Hydraulic Cylinder, Steering
4	Hydraulic Pump	10	Steel Hydraulic Lines, Bent
5	Hydraulic Manifold	11	Steel Hydraulic Lines, Straight
6	Oil Tank	12	Straight Adapter

Hydraulic Hoses

Item	Hose Ends	Length
A1/A2	3/8" MNPT x #6 FJIC	3/8" x 296"
B1/B2	#6 FJIC x #6 FJIC	3/8" x 60"
C1/C2	#6 FJIC x #6 MJIC	3/8" x 54"
D1/D2	#6 FJIC x #6 MJIC	3/8" x 54"
E1/E2	#6 FJIC x 1/2" MNPT	3/8" x 242"
F1/F2	#6 FJIC x 3/8" MNPT	3/8" x 18"
G	N/A	3/4" x 78"
H	1/2 MNPT x 1/2 FNPSM	1/2" x 22"
I1/I2	#6 MJIC x 3/8" MNPT	3/8" x 18"
J1	#6 MJIC x 3/8" MNPT	3/8" x 28"
J2	#6 MJIC x 3/8" MNPT	3/8" x 32"
K1	#6 MJIC x 3/8" MNPT	3/8" x 82"
K2	#6 MJIC x 3/8" MNPT	3/8" x 102"
P	1/2" MNPT x 1/2" MNPT	1/2" x 110"
T	1/2" MNPT x 1/2" MNPT	1/2" x 110"

Hose Routing

⚠ WARNING Serious operator injury could occur if the transport unit and hydraulic hoses are not assembled correctly. If necessary, disconnect the hoses and re-assemble.

The SP Transport unit MUST operate as indicated on the control panel decal. The auger MUST move in the direction that the handle is moved.

Assembly Notes:

- Assemble hoses as illustrated.
- Keep hoses free of dirt while assembling.
- Keep pressure and return sides aligned.
- Tighten after being satisfied that the hoses are in the proper position.
- Check operation.
- Secure hoses in place with the cable ties supplied.

Hydraulic Hoses A1 & A2

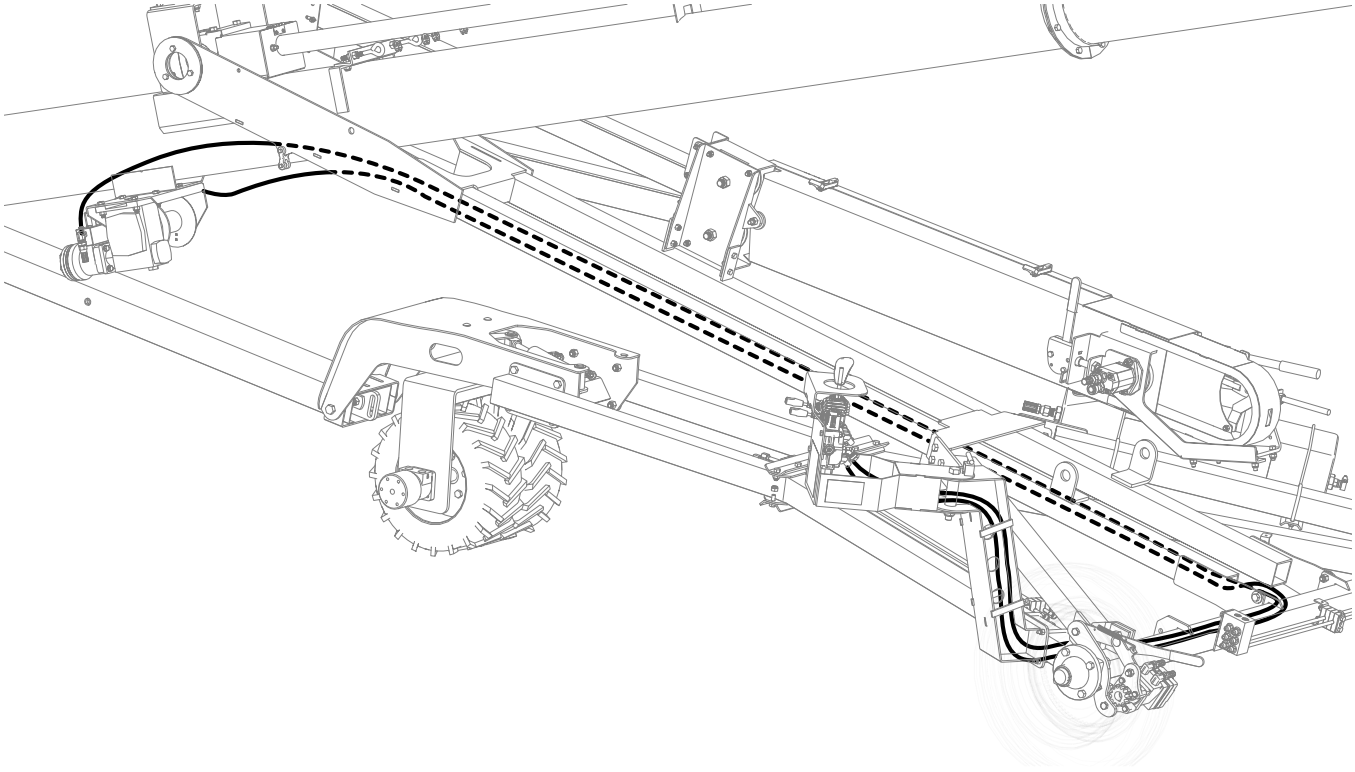

Hydraulic Hoses B1/B2, F1/F2, I1/I2, P, T & H

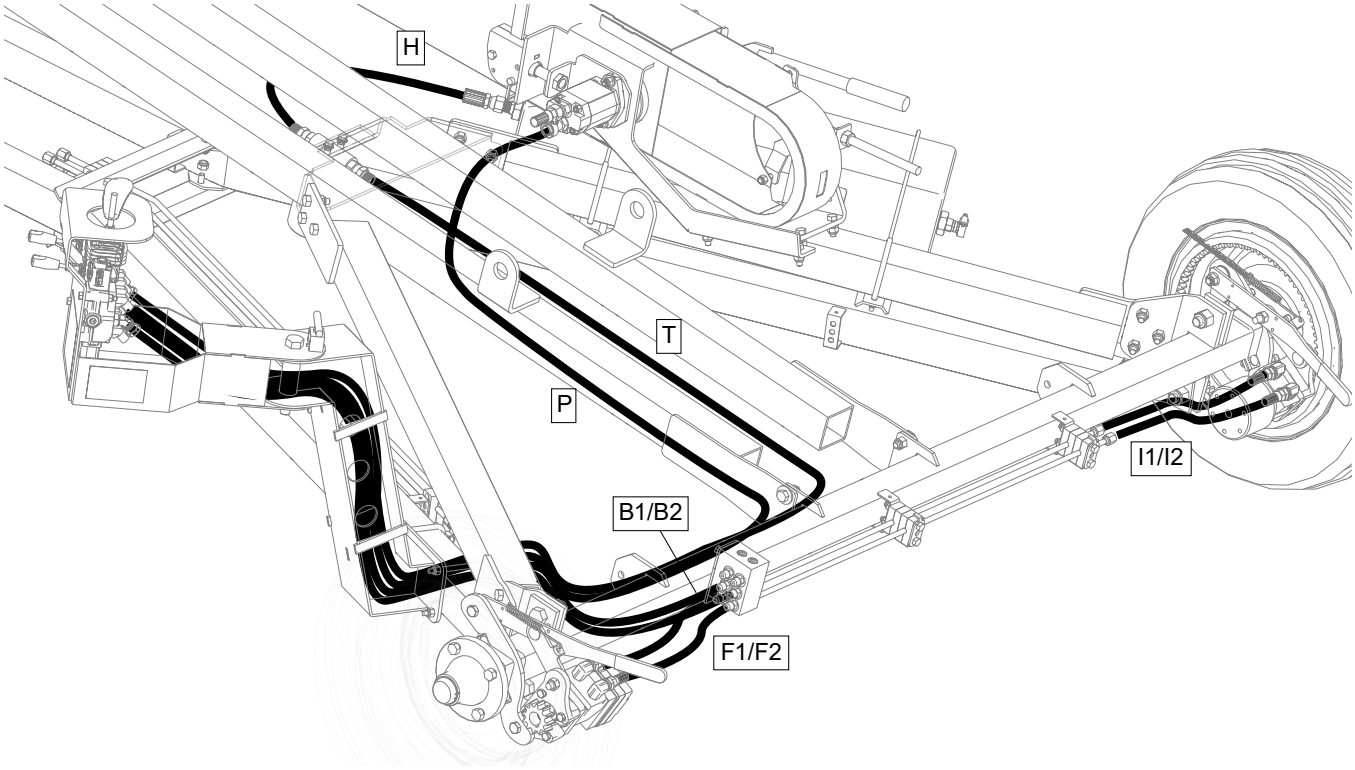

Hydraulic Hose G

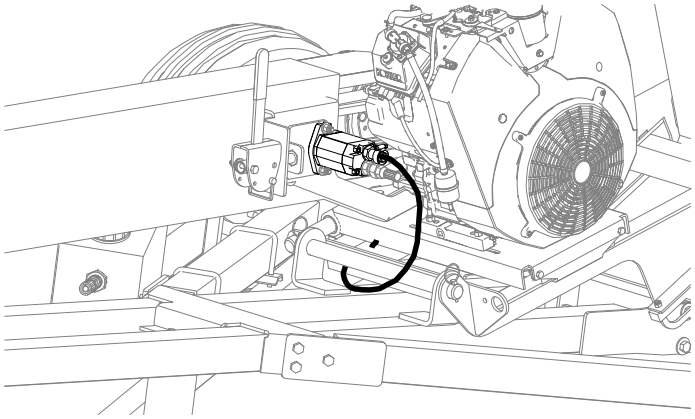

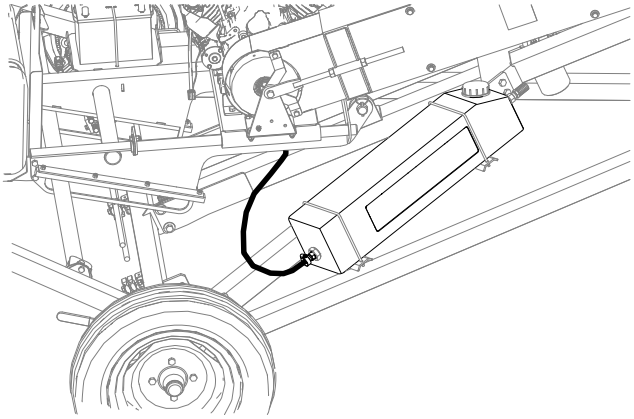

Note

Route hose G under the engine slider assembly along the lower frame.

Hydraulic Hoses E1 & E2

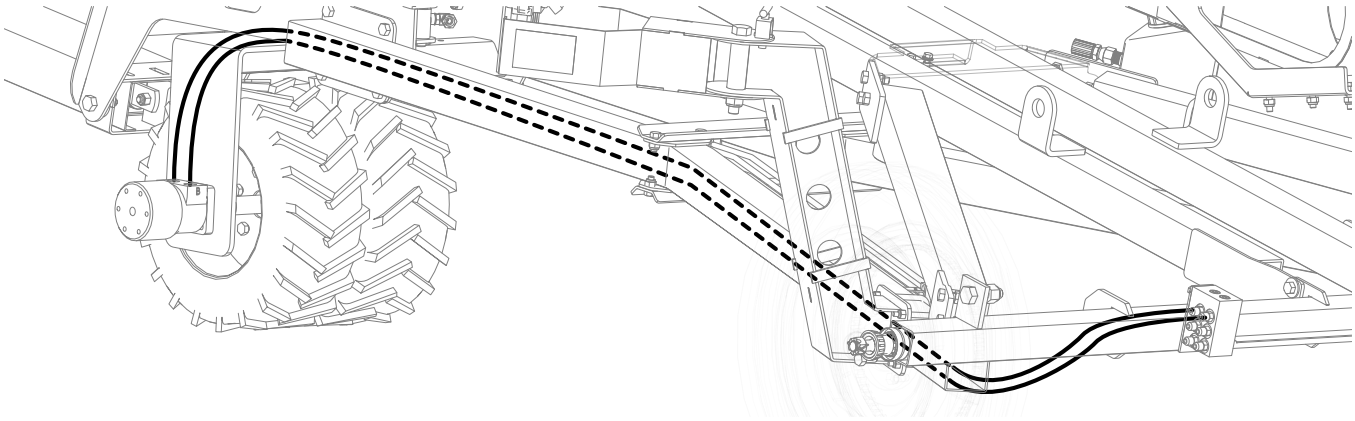

Hydraulic Hoses C1/C2 & D1/D2 (from Valve)

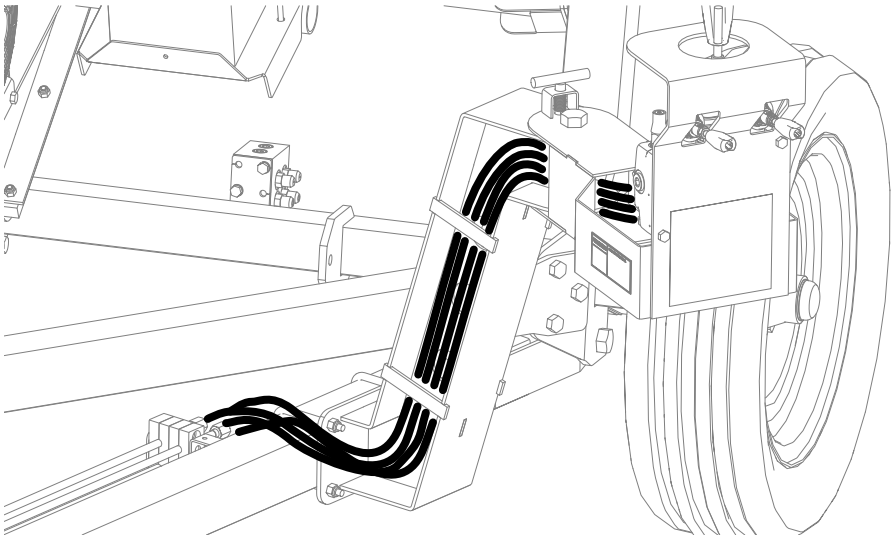

Hydraulic Hoses J1 & J2

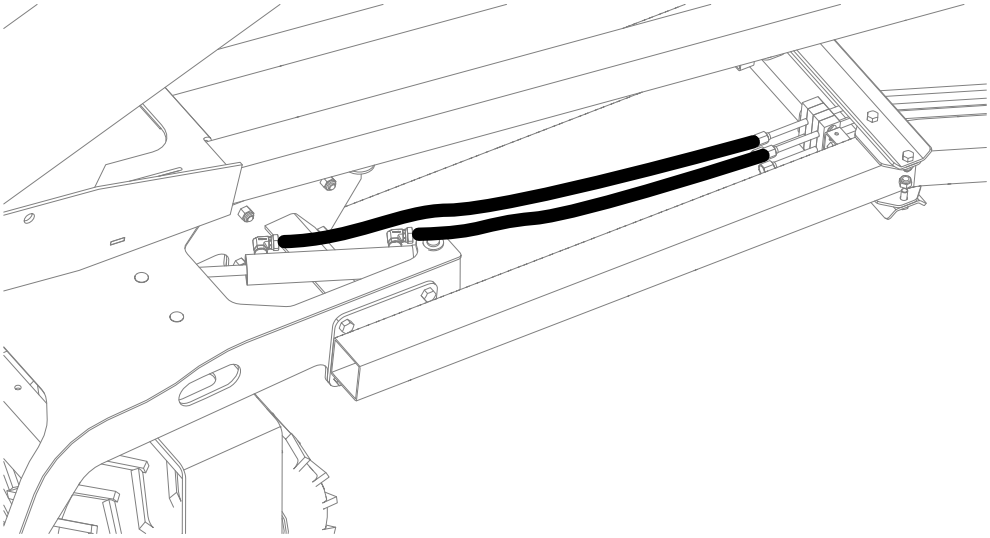

Hydraulic Hoses K1 & K2

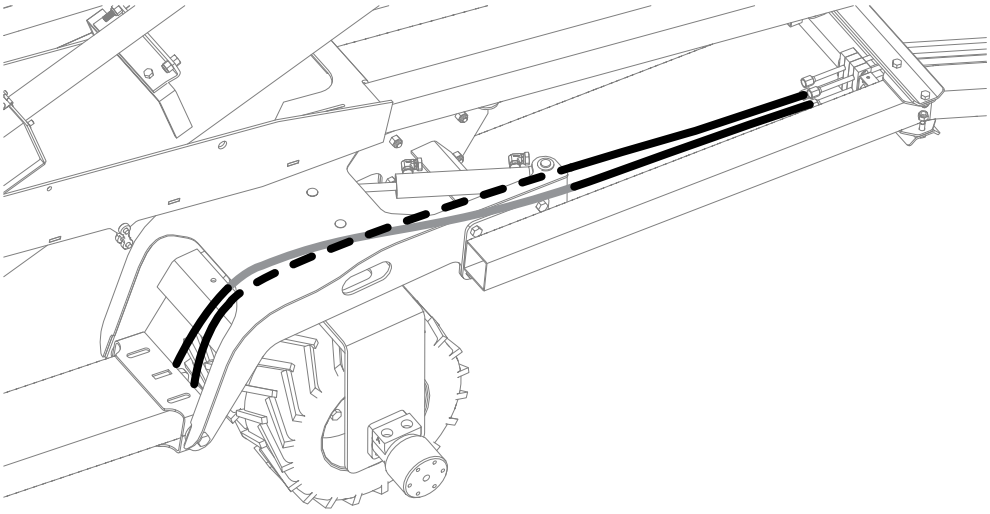

Hydraulic Steering Valve

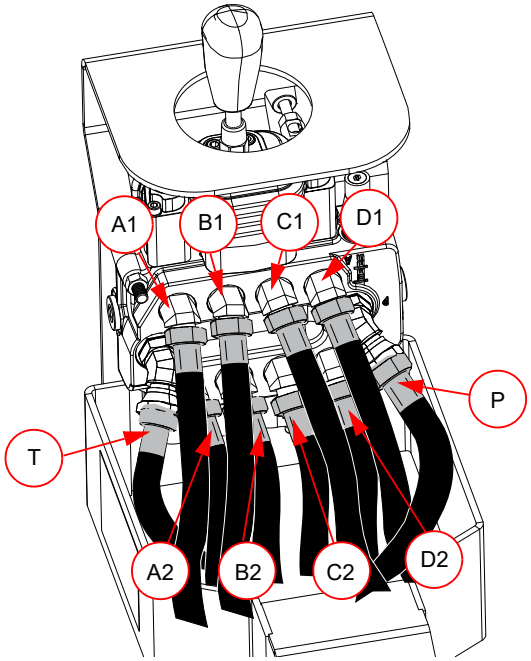

4.32. Install the Manual Holder

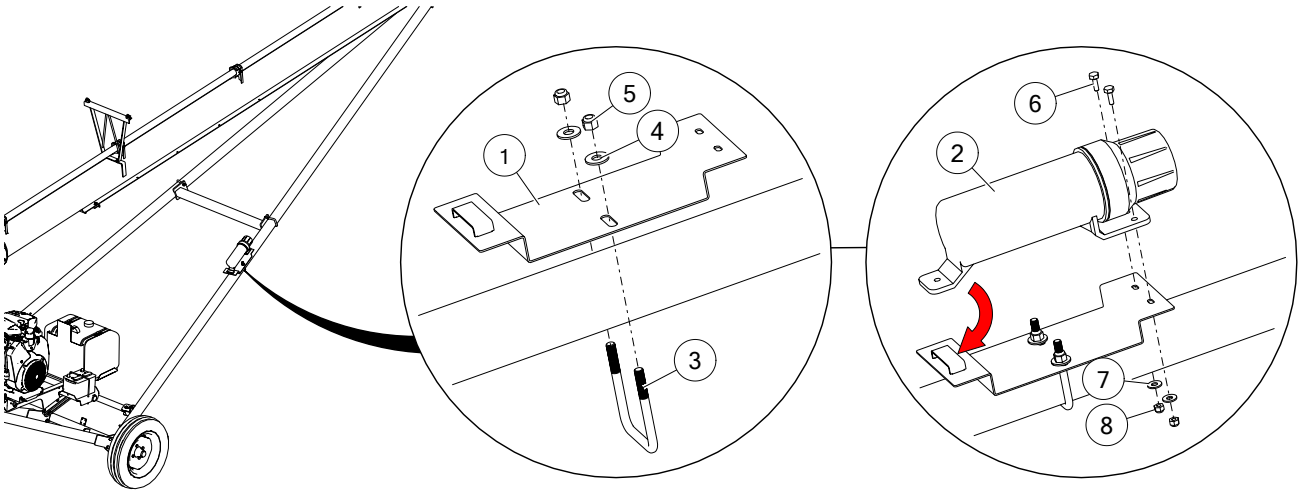

1	Manual Holder Mount	5	Lock Nut, 3/8"
2	Manual Holder	6	Bolt, 1/4" x 3/4"
3	Square U-Bolt, 3/8" x 3-1/16" x 4"	7	Flat Washer, 1/4"
4	Flat Washer, 3/8"	8	Lock Nut, 1/4"

4.33. Install the Hitch

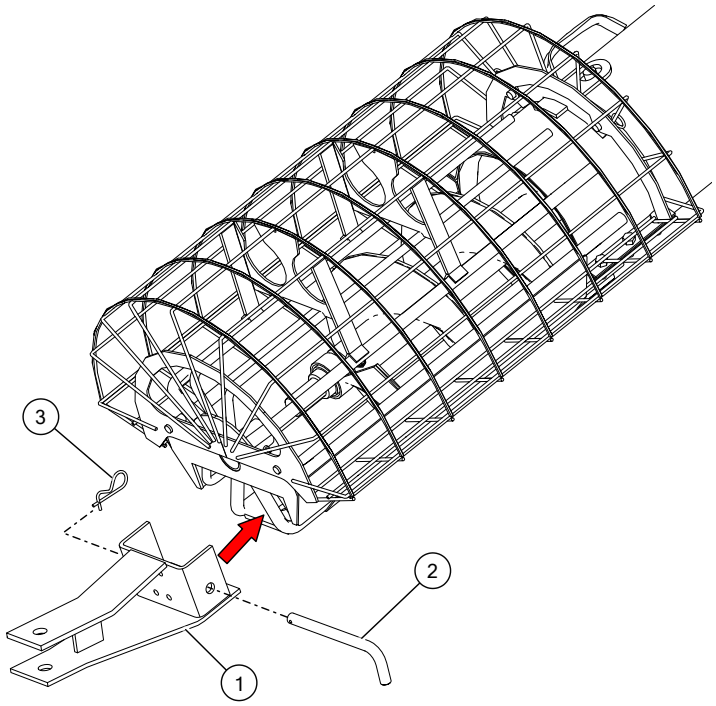

1	Clevis Hitch
2	Clevis Pin
3	Grip Clip

4.34. Install the Work Lights

1. Install the discharge-area flood lamp to the track stop with a bolt, washer, and lock nut, then plug the wiring harness connector into the flood lamp connector. Ensure that the connectors are fully engaged.
2. Run the wiring harness down the tube to the location of the engine-area lamp. Travel through the opening in the bearing brackets.
3. Install the engine-area mini flood lamp to the bracket using a bolt, washer, and lock nut, then plug the wiring harness connector into the mini flood lamp connector. Ensure that the connectors are fully engaged.
4. Run the wiring harness down the tube to the gearbox.
5. Secure the lamp bracket to the gearbox.
6. Install the intake-area mini flood lamp to the gearbox mount bracket using a bolt, washer, and lock nut, then plug the wiring harness connector into the mini flood lamp connector. Ensure that the connectors are fully engaged.
7. Run the wiring harness down the lower frame to the engine. Secure using P-clamps and Tek screws.
8. Connect the wiring-harness eyelet (white wire) to the motor frame (ground). Connect the butt splice to the motor power (positive).

   Note

   If no motor power lead is available to connect the butt splice it may be necessary to use the provided tap splice connector to draw power from another power or accessory wire. Ensure all connections are fused appropriately.

9. Install the switch box to the lower frame arm with two Tek screws.

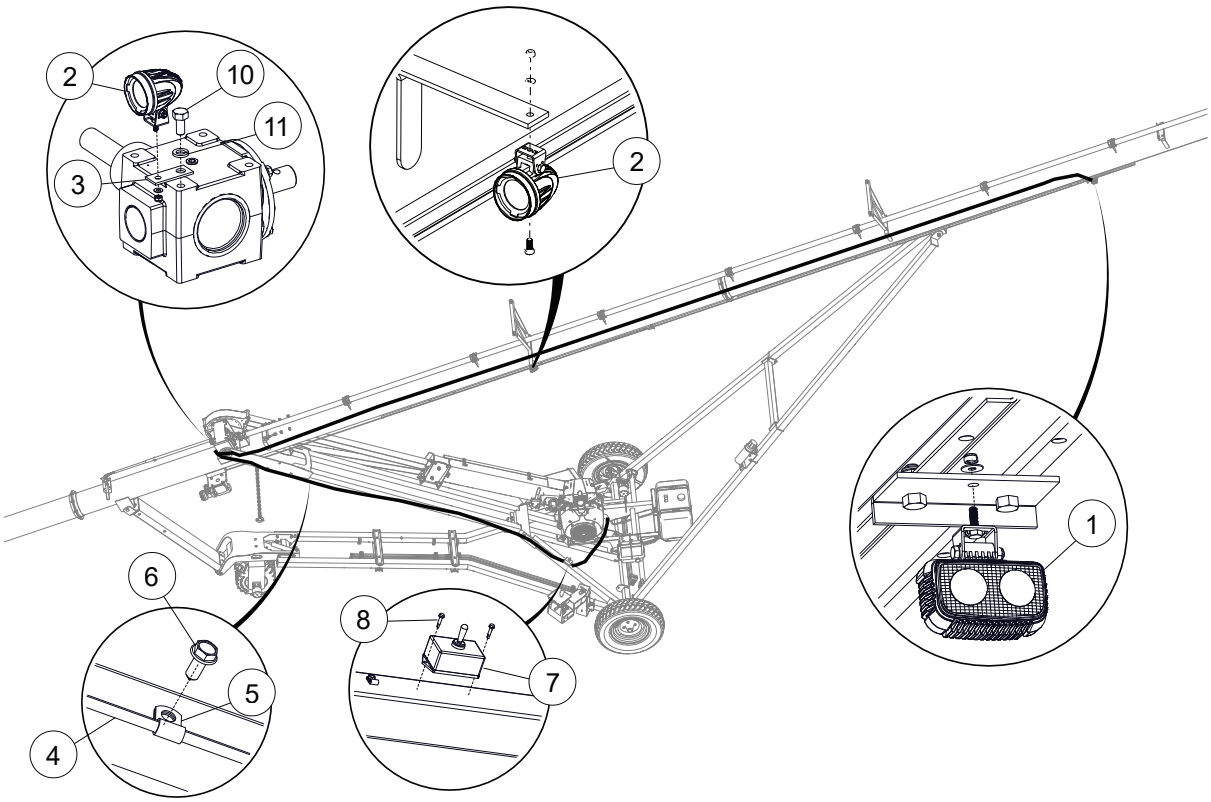

1	Flood Lamp (Includes Hardware)	6	Tek Screw, #14 x 5/8"
2	Mini Flood Lamp (Includes Hardware)	7	Switch Box
3	Lamp Bracket	8	Tek Screw, #8 x 3/4"
4	Wiring Harness	9	Bolt, 1/2" x 1"
5	P-Clamp, 1/4"	10	Lock Washer, 1/2"

5. Specifications

Specification	**10–61**
Tube Size	10" (254 mm)
CAPACITIES	
Unloading Rate	Up to 6000 Bu/Hr (212 m^3/Hr)
TRANSPORT DIMENSIONS	
Length	61'6" (18.7 m)
Width	8' (2.44 m)
Height	14'4" (4.37 m)
DISCHARGE CLEARANCE DIMENSIONS	
Min	11' 10" (3.61 m)
Max	39' 9" (12.12 m)
TIRES	
Type	15" Radial
Inflation Pressure	See Manufacturer Recommended Pressure on Tire Sidewall
WEIGHT	
Hitch Weight (no engine)	329* lb (149 kg)
Total Weight	3683* lb (1671 kg)
POWER RECOMMENDATIONS	
Gas Engine	38 HP
PART SPECIFICATIONS	
Gas Tank Capacity	12 Imp Gal (45 L)
Gearbox Oil Capacity	0.9 US Quarts (0.85 L)
Upper Drive Housing Grease Quantity	1100 g (40 oz)
Belt Size	3B360
Mover Kit Hydraulic Oil	ISO 32 Hydraulic Oil

* Weights are estimated.

6. Appendix

6.1. Bolt Torque

Table 2 gives the correct torque values for various hardware. Tighten all bolts to the torque specified, unless otherwise noted. Check tightness periodically, using Table 2 as a guide. Replace the hardware with the same strength bolt, contact AGI if you are unsure.

Table 2. Recommended Bolt Torque[1]

Size	Dry or Lubricated	Threads per inch (Course/ Fine)	Area of Bolt (sq in.)		Recommended Torque (ft-lb)							
					Grade 2		Grade 5		Grade 8		8.8 S/S	
			Coarse	Fine	Coarse	Fine	Coarse	Fine	Coarse	Fine	Coarse	Fine
1/4"	Dry	20/28	0.0318	0.0364	5.5	6.3	8	10	12	14	6.3	7.8
	Lubricated				6.3	4.7	6.3	7.2	9	10	-	-
5/16"	Dry	18/24	0.0524	0.058	11	12	17	19	24	27	11	11.8
	Lubricated				8	9	13	14	18	20	-	-
3/8"	Dry	16/24	0.0775	0.0878	20	23	30	35	45	50	20	22
	Lubricated				15	17	23	25	35	35	-	-
7/16"	Dry	14/20	0.1063	0.1187	32	36	50	55	70	80	31	33
	Lubricated				24	27	35	40	50	80	-	-
1/2"	Dry	13/20	0.1419	0.1599	50	55	75	85	110	120	43	45
	Lubricated				35	40	55	65	80	90	-	-
9/16"	Dry	12/18	0.182	0.203	70	80	110	120	150	170	57	63
	Lubricated				55	60	80	90	110	130	-	-
5/8"	Dry	11/18	0.226	0.256	100	110	150	170	210	240	93	104
	Lubricated				75	85	110	130	160	180	-	-
3/4"	Dry	10/16	0.334	0.373	175	200	260	300	380	420	128	124
	Lubricated				130	140	200	220	280	310	-	-
7/8"	Dry	9/14	0.462	0.508	170	180	430	470	600	670	194	193
	Lubricated				125	140	320	350	180	180	-	-
1"	Dry	8/14	0.606	0.679	250	280	640	720	910	1020	287	289
	Lubricated				190	210	480	540	680	760	-	-
1-1/8"	Dry	7/12	0.763	0.856	350	400	790	890	1290	1440	288	290
	Lubricated				270	300	590	670	970	1080	-	-
1-1/4"	Dry	7/12	0.989	1.073	500	550	1120	1240	1820	2010	289	291
	Lubricated				380	420	840	930	1360	1510	-	-
1-1/2"	Dry	6/12	1.405	1.581	870	960	1950	2200	3160	3560	-	-
	Lubricated				650	730	1460	1640	2370	2670	-	-

1. Torque value for bolts and cap screws are identified by their head markings. Established at 75% of yield strength of bolt given the cross-sectional area.

Note

Torque figures in table are valid for non-greased or non-oiled threads and head unless otherwise specified. Therefore, do not grease or oil bolts or cap screws unless otherwise specified in this manual. When using locking elements, increase torque values by 5%.

6.2. Fittings Torque Values

These specifications are for carbon steel. With Zinc plating always lubricate threads and seals. For stainless steel, use the high value of the torque range of steel. For brass, use 70% of the torque value of steel. For mixed metals, use the torque of the lower of the two metals. Torque range is normally calculated +/- 10%.

Table 3. Pipe Rigid - Tapered Pipe Threads (NPTF, N/NF) - Carbon Steel

Pipe Size	Turns-from-finger	Max ft-lbs	Max N-m
1/8" (-2)	3/4 - 1 3/4	12	16
1/4" (-4)	3/4 - 1 3/4	25	34
3/8" (-6)	3/4 - 1 3/4	40	54
1/2" (-8)	1/2 - 1 1/2	54	73
3/4" (-12)	1/2 - 1 1/2	78	106
1" (-16)	1/2 - 1 1/2	112	152
1 1/4" (-20)	1/2 - 1 1/2	154	209
1 1/2" (-24)	1/2 - 1 1/2	211	286
2" (-32)	1/2 - 1 1/2	300	407

Table 4. Pipe Swivel - Straight Pipe Threads (NPSM, N/NFS) - Carbon Steel

Pipe Size	Max ft-lbs	Max N-m
1/8" (-2)	12	16
1/4" (-4)	25	3
3/8" (-6)	40	54
1/2" (-8)	54	73
3/4" (-12)	78	106
1" (-16)	112	152
1 1/4" (-20)	154	209
1 1/2" (-24)	211	286
2" (-32)	300	407
Note: seals on an internal male 30° seat		

Table 5. Stud End O-Ring Boss (ORB) SAE (U/UF) – Carbon Steel

Tube Size	Thread UNF-2A	Max ft-lbs	Max N-m
-2	5/16" - 24	6-7	8-9
-3	3/8" - 24	8-9	11-12
-4	7/16" - 20	13-15	18-20
-5	1/2" - 20	17-19	23-26

Table 5 Stud End O-Ring Boss (ORB) SAE (U/UF) – Carbon Steel (continued)

Tube Size	Thread UNF-2A	Max ft-lbs	Max N-m
-6	9/16" - 18	22-24	29-33
-8	3/4" - 16	40-43	49-53
-10	7/8" - 14	43-48	59-64
-12	1 1'16" - 12	68-75	93-102
-14	1 3/16" - 12	90-99	122-134
-16	1 5/16" - 12	112-123	151-166
-20	1 5/8" - 12	146-161	198-218
-24	1 7/8" - 12	154-170	209-231

Table 6. JIC 37° Flare Tube Fitting (J/JFS)

Tube Size	Thread UNF-2A	Torque ft-lbs	Torque N-m
-2	5/16 - 24	6-7	8-9
-3	3/8 - 24	8-9	11-12
-4	7/16 - 20	11-12	15-16
-5	1/2 - 20	14-15	19-21
-6	9/16 - 18	18-20	24-28
-8	3/4 - 16	36-39	49-53
-10	7/8 - 14	57-63	77-85
-12	1 1/16 - 12	79-88	107-119
-14	1 3/16 - 12	94-103	127-140
-16	1 5/16 - 12	108-113	147-154
-20	1 5/8 - 12	127-133	172-181
-24	1 7/8 - 12	158-167	215-226
-32	2 1/2 - 12	245-258	332-350

AGI is a leading provider of equipment solutions for agriculture bulk commodities including seed, fertilizer, grain, and feed systems with a growing platform in providing equipment and solutions for food processing facilities. AGI has manufacturing facilities in Canada, the United States, the United Kingdom, Brazil, South Africa, India and Italy and distributes its products globally.

P.O. Box 39, Rosenort, Manitoba, R0G 1W0 Canada
P 866.467.7207 (Canada & USA) or 204.746.2396 | **F** 866.768.4852 | **E** sales@grainaugers.com

AGGROWTH.COM aggrowthintl

©Ag Growth International Inc. 2021 | Printed in Canada

If you have any comments or questions on this manual, or find an error, email us at comments@aggrowth.com.
Please include the part number listed on the cover page in your message.