Hutchinson/Mayrath

INSTALLATION INSTRUCTIONS

This safety symbol is used throughout these instructions to alert you to information about unsafe actions or situations, and may be followed by the word **DANGER, WARNING, or CAUTION. Be Alert! Your safety and the safety of others is involved.**

DANGER - Indicates immediate hazards that may result in severe injury or death. **WARNING** - Indicates unsafe actions or situations that may cause severe injury, death and/or major equipment or property damage. **CAUTION** - Indicates unsafe actions or situations that may cause injury, and/or minor equipment or property damage.

Please remember that safety is the number one priority. Use caution during all phases of the assembly process. Wear proper PPE (personal protective equipment) and follow the safety recommendations included in the manual provided with your equipment.

TRUSS KIT SUPPORT ASSEMBLIES, for use with 6", 8" & 10" LOOP SYSTEMS and 8" & 10" DOUBLE RUN CONVEYOR SYSTEMS

These truss kits are designed to safely support their own weight with material, [48 lb/ft *(758 kg/m3)*] flowing through the tube, or wind loads up to 100 mph *(160 km/h)*. **They are *not designed* to support or brace equipment other than Hutchinson Grain Pump Loop or Hutchinson Double Run Grain Pump Systems.**

Before beginning assembly it is suggested to read through these instructions and lay out all items from the kit to ensure all parts are accounted for. This not only helps you become familiar with the parts and assembly procedures, but also makes you aware of what tools, equipment or materials you may need to complete the installation process.

WARNING! Use the proper personal protective equipment such as eye, ear, hand and body protection during all phases of assembly.

Use caution when working in areas above ground. Persons operating, servicing or repairing equipment that requires above ground work shall be properly secured with the use of "fall protection" equipment as set forth by OSHA guidelines and regulations.

Metal buildings, scaffolding and other types of work surfaces can become very slippery, especially when surfaces are wet and/or oily, this can create hazardous working conditions. Use caution when climbing or walking on these surfaces.

Truss Installation, Loop Systems

The illustrations on the following page show the approximate dimensions for typical layouts of the truss supports used on loop systems **up to 65' *(19.81 m)* long and for loop systems 66' to 100' *(20.12 to 30.48 m)* in length.**

Because loop systems may be longer or shorter than what is dimensioned in the illustrations, keep in mind that the spider assemblies need to be spaced evenly along the length of the span between the anchor points.

Shorter spans on the loop system, **up to 65' *(19.81 m)* will require only one spider assembly between the anchor points.** Longer spans of the loop system, **66' to 100' *(20.12 to 30.48 m)* will require a small spider assembly near each anchor point and a large spider assembly in the middle of the span.**

Each anchor point will require welding stop keys onto the housing. These keys will be welded to the conveyor housing as shown on Pages 3 and 8 of these instructions.

Assembly instructions for installation on the Double Run are similar and are detailed beginning on Page 8 of these instructions.

Truss Installation, Loop Systems (con't.)

1. Using the illustrations below as a reference, determine and mark the locations for the spider and anchor assemblies. Note that the end anchors should be positioned within 3' *(914 mm),* with a maximum of 5' *(1.52 m),* of the main tube support.

   Dimensions will vary from what is shown below depending on the length of the loop system that is being supported. Use the guidelines given below to determine proper locations of the spider and anchor assemblies.

   The dimensions below are shown as a reference only. On **single spider** applications, locate the spider assembly in the center of the anchor points, on applications using **three spider** assemblies, locate the **large spider** assembly in the center of the anchor points and the **two smaller spider** assemblies evenly spaced between each anchor point and the large spider.

For Layouts Up to 65'-0" *(19.81 m)*
The illustration shows a 65' *(19.81 m)* layout, dimensions will differ from what is shown depending on length of span

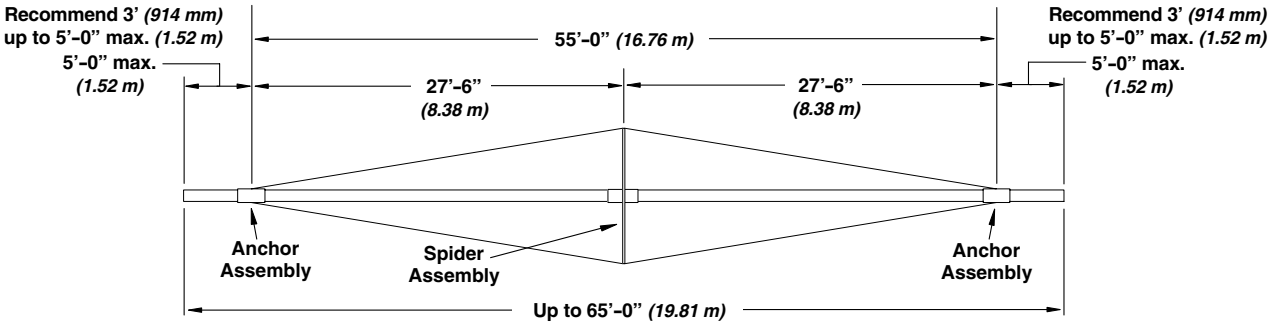

For Layouts of 66'-0" to 100'-0" *(20.12 to 30.48 m)*
The illustration shows a 100' *(30.48 m)* layout, dimensions will differ from what is shown depending on length of span

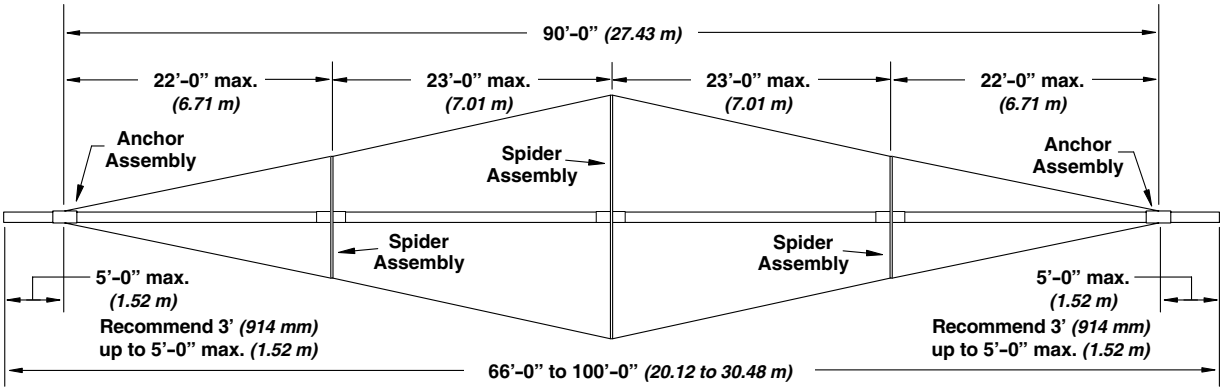

Truss Installation, Loop Systems (con't.)

2. Assemble the end anchor half-bands to the tube at the locations previously marked (within 3', maximum of 5' from main tube support). Secure the anchor half-bands using 7/16" x 1 1/4" bolts and nylon locknuts (Do Not tighten completely at this time).

   Position four (4) of the 3/8" x 1 1/2" long keys onto the tube housing directly in front of and against the edge of the anchor half-bands and mark the locations **(position keys so they are 45° off vertical, See illustration below).** Slide the anchor half-bands away from the keys and weld the keys to the housing at that location (weld only the three sides not contacting the anchor half-band, **Do Not weld on the half-band side of the key,** See illustration below). After the weld area has cooled, clean the surrounding area and apply a rust inhibitor type paint or sealant).

3. Slide the anchor half-bands against the key and tighten half-bands into position **(Do Not tighten so tight that the lips of the half-band become deformed).**

4. Install the turnbuckles to the ears on the anchor half-bands as shown below. Leave as much adjustment on the threaded rods as possible

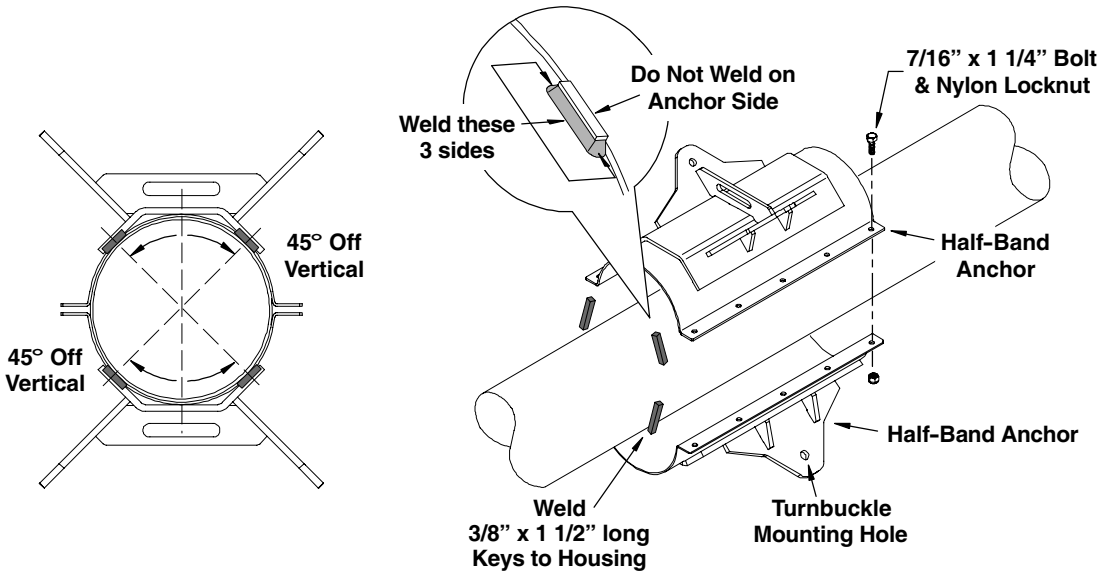

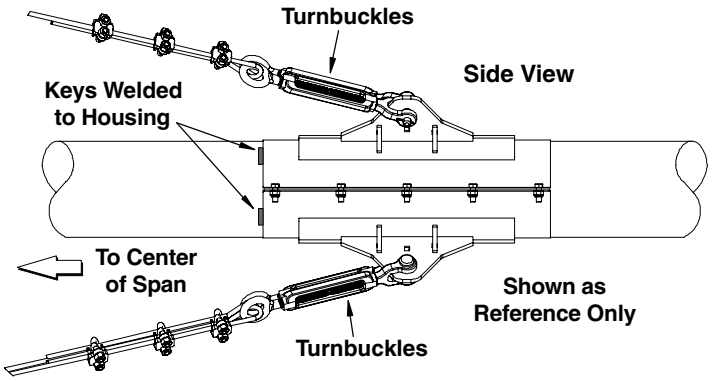

5. Install the spider assembly. The spider assemblies, when complete, will resemble the illustrations below. Begin spider assembly for the Loop System with the instructions below (Double Run assembly begins on Page 8).

Loop Spider Assembly

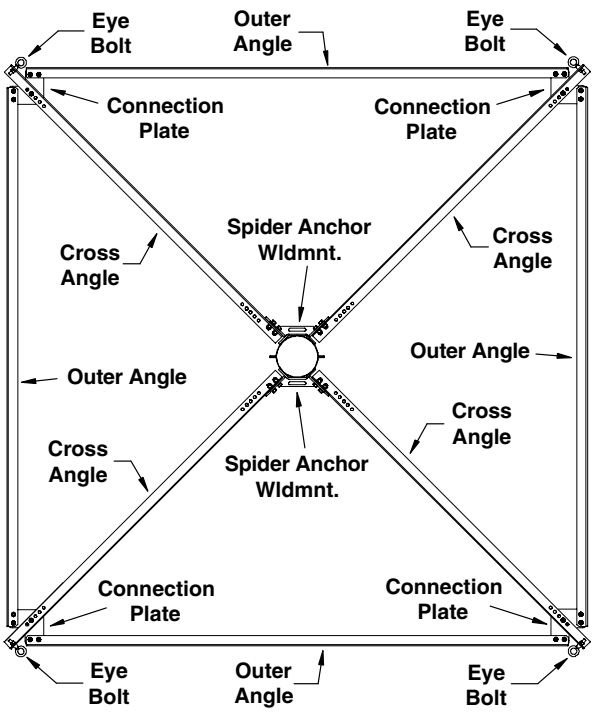

Double Run Spider Assembly

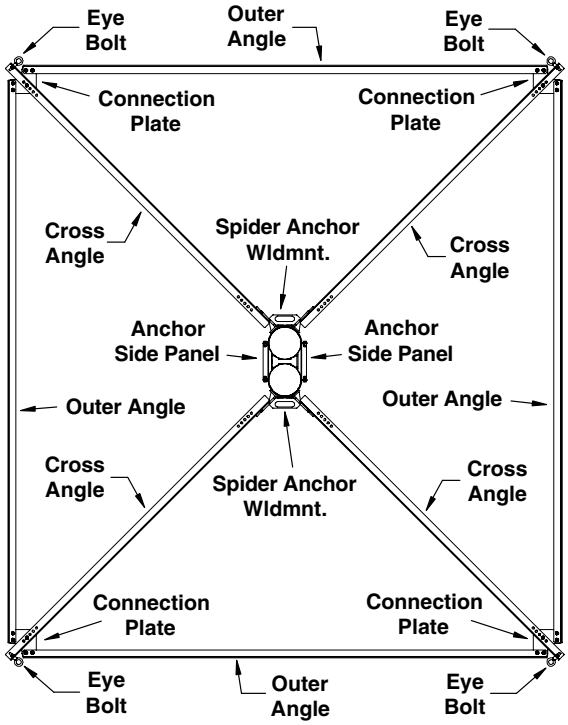

6. Attach the spider half-bands at the predetermined location(s) previously marked. Secure the half-bands to the tube using 7/16" x 1 1/4" bolts and nylon locknuts **(Do Not tighten so tight that the lips of the half-bands become deformed).**

   Step 7 on Page 5 shows the spider assembly used for the **single spider** on applications with **spans up to 65'** *(19.81 m)* as well as for the **two (2) smaller spider** assemblies on applications with **spans from 66' to 100'** *(20.12 to 30.48 m).*

   Step 8 on Page 6 shows the installation of the **large spider** assembly used on the Loop & Double Run applications with **spans from 66' to 100'** *(20.12 to 30.48 m)*. **Note that the cross angles and outer angles are doubled adding more structural integrity.**

Truss Installation, Loop Systems (con't.)

7. Attach the cross angles to the ears on the spider half-bands as shown below and secure using 7/16" x 1 1/4" bolts and nylon locknuts (Do Not tighten completely at his time, you may need to allow a little movement for attaching the outer angles and corner connection plates).

   Loosely attach the corner connection plates to the ends of the cross angles using 7/16" x 1 1/4" bolts, flat washers and nylon locknuts (See illustration below). After the connection plates have been installed, attach the outer angles to the connection plates using 7/16" x 1 1/4" bolts and nylon locknuts (See illustration below).

   Install the eye-bolt onto the ends of the cross angles and secure using the 1/2" nylon locknut) orient the eye-bolt so it is parallel with the outer angles (See illustration below).

   Tighten the hardware securing the outer angles to the connection plates and tighten the hardware securing the cross angles to the spider half-bands. It may be necessary to adjust the spider half-bands so that the outer angles are square with the tube, once properly oriented, re-tighten the hardware securing the half-bands. Refer to the illustration on Page 4 for reference of the completed assembly.

Single Spider Assembly f/ spans up to 65'
and the
Smaller Spider Assemblies f/ Spans from 66' to 100'

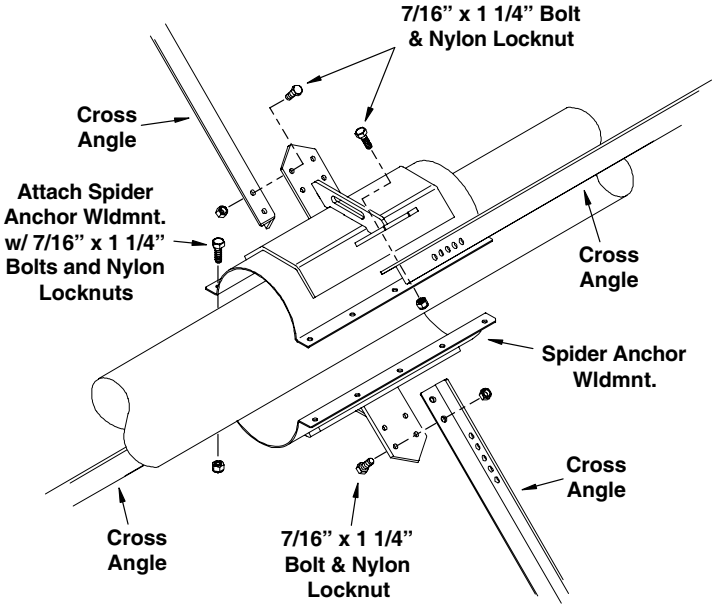

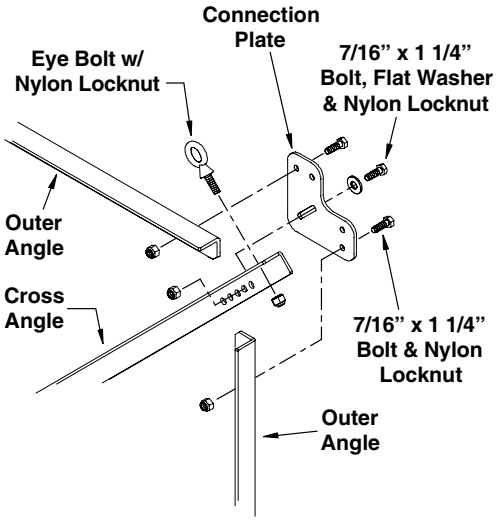

For Large Spider on 66' to 100' Applications

8. Attach two (2) cross angles to each of the ears on the spider half-bands as shown in Fig. 1 and loosely secure using 7/16" x 1 1/4" bolts and nylon locknuts. Loosely attach the corner connection plates to the ends of the cross angles using 7/16" x 1 1/4" bolts and nylon locknuts (the connection plates will be sandwiched between the two cross angles, as shown in Fig. 2).

   After the connection plates have been installed, attach the horizontal and vertical outer angles to the connection plates using 7/16" x 1 1/4" bolts and nylon locknuts (the connection plates will be sandwiched between the outer angles as shown in Fig. 2).

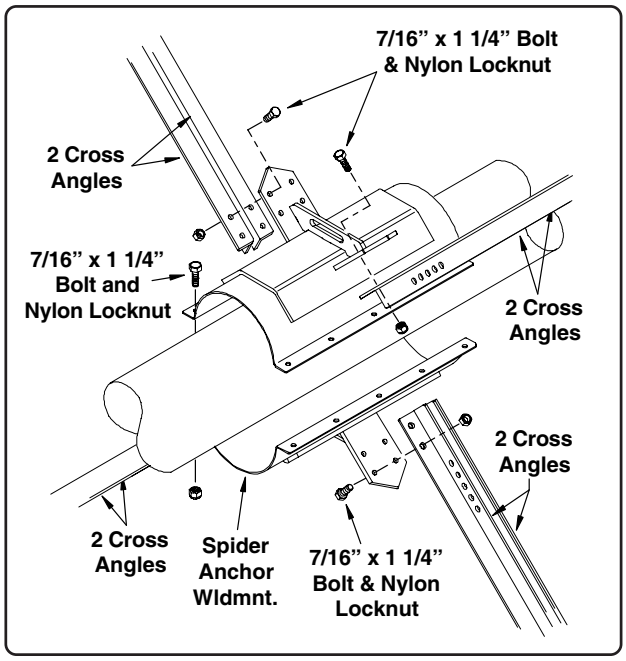

Fig. 1

9. Install the eye-bolt onto the ends of the cross angles and secure using the 1/2" nylon locknut (orient the eye-bolt so it is parallel with the outer angles, See Fig. 2).

   Tighten the hardware securing the outer angles to the connection plates and tighten the hardware securing the cross angles to the spider half-bands. It may be necessary to adjust the spider half-bands so that the outer angles are square with the tube, if necessary loosen the hardware securing the spider half-bands, once properly oriented, re-tighten the hardware **(Do Not tighten so tight that the lips of the half-bands become deformed).**

   Refer to the illustration on Page 4 for reference of the completed assembly.

10. The cross angles and outer angles each have a hole located in its center, place a spacer plate in between the angles and secure together using a 5/16" x 1 1/4" bolt and nylon locknut.

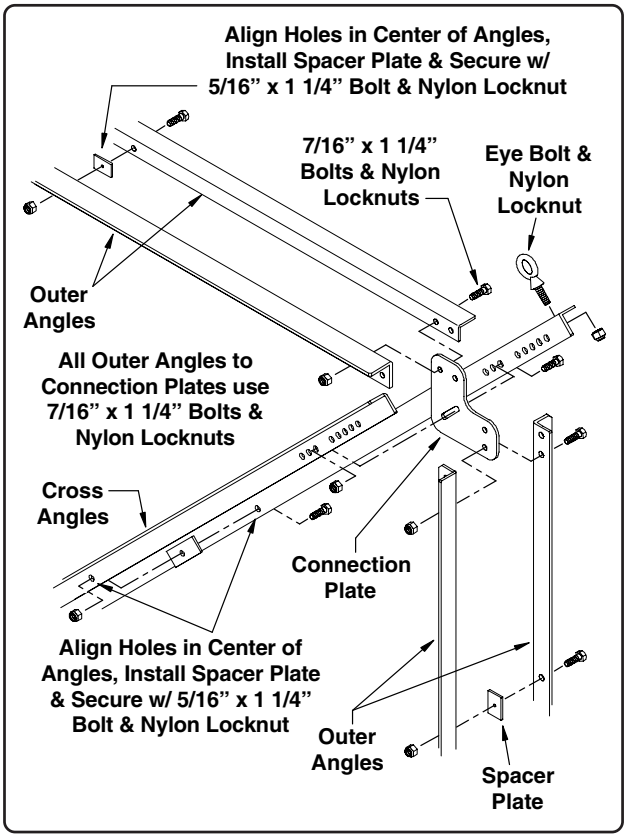

Fig. 2

Truss Installation, Loop Systems (con't.)

WARNING! It is important to install the wire rope clips as outlined in the following instructions.

Match the same size clip with the same size cable.

Do Not mismatch wire rope clips with wire rope clips made by other manufacturers.

Prepare cable end termination only as instructed.

Failure to make cable end terminations in accordance with these instructions or failure to regularly check and retighten to recommended torque can cause the effectiveness of the cable and the wire rope clips intended use to fail.

11. Attach one end of the cable to one of the turnbuckles at the anchor end. **Use the illustration below to determine the amount of turn-back (loose end of cable) required for the 3/8" and 1/2" dia. cables.**

12. Turn back the specified amount of cable and install the first wire rope clip approximately one base width of the clip from the end of the cable (See Illustration below). The base width is defined as the width of the bottom of the wire rope clip as shown in the illustration. **Note the orientation of the wire rope clip, U-bolt portion of the clip contacts the dead end (loose end) of the cable, the saddle portion of the clip contacts the live end of the cable.**

    Attach the second wire rope clip as near the loop attached to the turnbuckle as possible. Then install the third clip spaced evenly between the first two clips.

    Torque the clip bolts to 45 ft-lbs *(61.0 N·m)* for 3/8" dia. cable and 65 ft-lbs *(88.1 N·m)* for 1/2" dia. cable.

13. Route the cable through the eye bolt(s) on the ends of the cross angles and secure to the turnbuckle on the opposite end anchor. Take up cable slack, the turn-back amount may be longer than necessary, if so, cut excess cable to appropriate length and install wire rope clips using the same manner as before.

    After all cables have been routed, begin tightening the cables using the turnbuckles to adjust cable tension. The bottom cables should be taut enough to keep the length of tubing straight with the top cables drawn up snug. Cable has the tendency to stretch and shrink due to the load applied to the cable and because of such factors having to do with the outside elements, check cables regularly and retighten as needed.

Correct Installation of Wire Rope Clips

Recommended Torque f/ Wire Rope Clips:

3/8" Cable – 45 ft.-lbs. *(61.0 N·m)*
1/2" Cable – 65 ft.-lbs. *(88.1 N·m)*

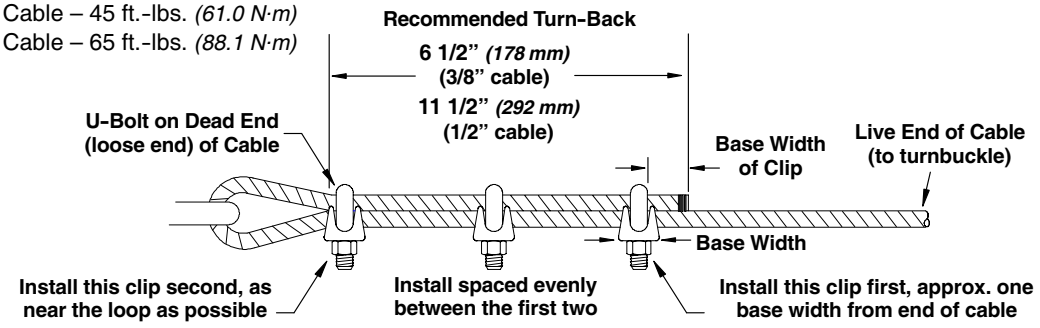

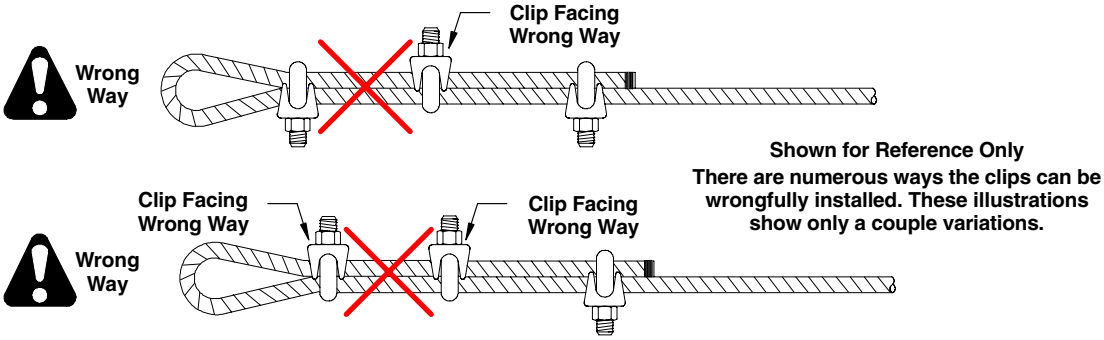

Truss Installation, Double Run Conveyors

Use the same layout dimensions and information shown on Page 2 for properly locating the spider assembly and end anchors for installation on the Double Run.

1. Position one of the anchor half-bands onto the top of the housing at the locations previously marked (within 3', maximum of 5' from boot and discharge ends). Check to see if there is an existing support welded to the housing below the half-band. **There must be two (2) means of support between the conveyor tubes at each anchor point.** If there is only one existing welded support, install one set of the support brackets and secure using the 1/2" threaded rods and nylon locknuts, if there are no existing welded supports, install two (2) sets of support brackets and secure using the 1/2" threaded rods and nylon locknuts (See illustration below).

   After support bracket(s) have been installed, position a half-band on top of and on the bottom of the conveyor tubes, position an anchor side panel in between the upper and lower half-bands as shown below. Secure using 7/16" x 1 1/4" bolts, flat washers and nylon locknuts (Do Not tighten completely at this time).

2. Position four (4) of the 3/8" x 1 1/2" long keys onto the tube housing directly in front of and against the edge of the anchor half-bands and mark the locations **(position keys so they are 45° off vertical, See illustration below).** Slide the anchor half-bands away from the keys and weld the keys to the housing at that location (weld only the three sides not contacting the anchor half-band, **Do Not weld on the half-band side of the key,** See illustration below). After the weld area has cooled, clean the surrounding area and apply a rust inhibitor type paint or sealant).

3. Slide the anchor half-bands against the key and tighten into position **(Do Not tighten so tight that the lips of the half-band become deformed).**

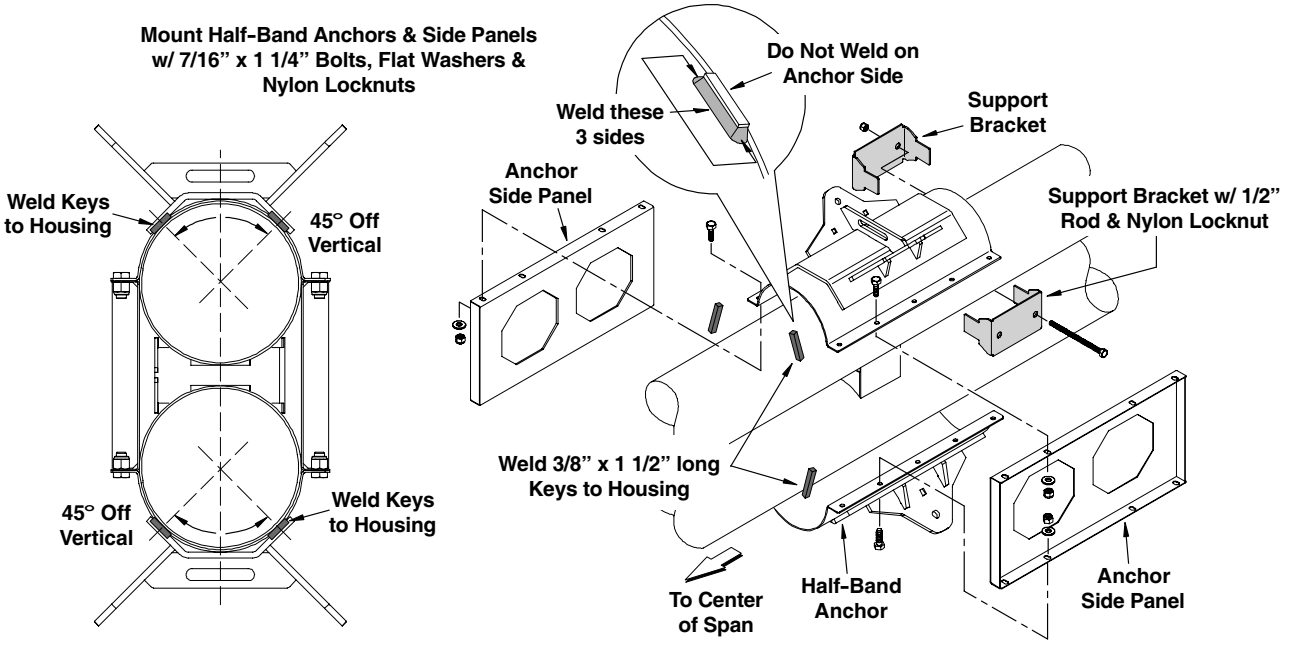

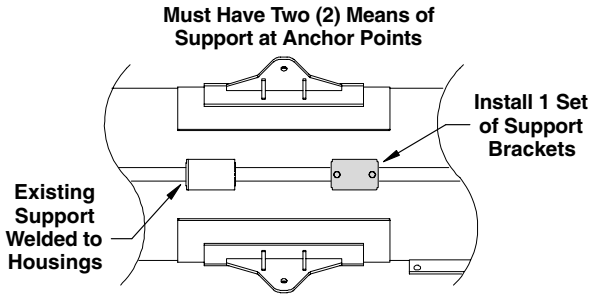

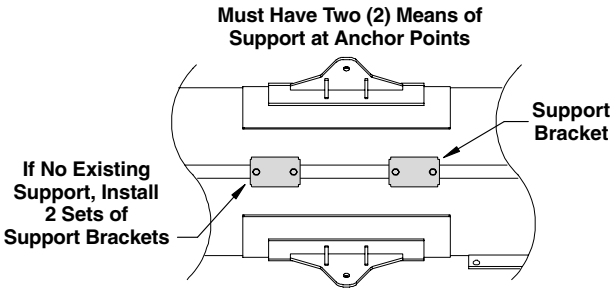

Truss Installation, Double Run Conveyors (con't.)

4. Install the turnbuckles to the ears on the anchor half-bands as shown below. Leave as much adjustment on the threaded rods as possible

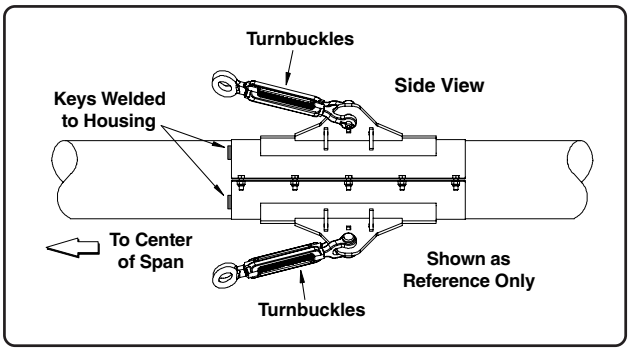

Fig. 3

5. Install the spider assembly. When complete, the spider assembly will resemble the illustration on Page 4.

   Steps 6 thru 8 show the spider assembly for the **single spider** used on applications with **spans up to 65'** *(19.81 m)* as well as the **two (2) smaller spider assemblies** on applications with **spans from 66' to 100'** *(20.12 to 30.48 m).*

   Steps 9 thru 12 on Page 10, show the installation of the **large spider assembly** used on Double Run applications with **spans from 66' to 100'** *(20.12 to 30.48 m).* **Note that the cross angles and outer angles are doubled adding more structural integrity to the assembly.**

6. Position the spider half-bands and anchor side panels at the predetermined location(s) previously marked. Secure the side panels to the spider half-bands using 7/16" x 1 1/4" bolts, flat washers and nylon locknuts (Do Not tighten completely at this time).

7. Attach the cross angles to the ears on the spider half-bands as shown below and secure each angle using 7/16" x 1 1/4" bolts and nylon locknuts (Do Not tighten completely at his time, you may need to allow a little movement for attaching the outer angles and corner connection plates).

   Loosely attach the corner connection plates to the ends of the cross angles using 7/16" x 1 1/4" bolts, flat washers and nylon locknuts. After the connection plates have been installed, attach the outer angles to the connection plates using 7/16" x 1 1/4" bolts and nylon locknuts (See illustration below).

8. Install the eye-bolt onto the ends of the cross angles and secure using a 1/2" nylon locknnut (orient the eye-bolt so it is parallel with the outer angles, See illustration below).

Spider Assembly for Single Spider (units up to 65') and the Two Smaller Spiders on units 66' to 100'

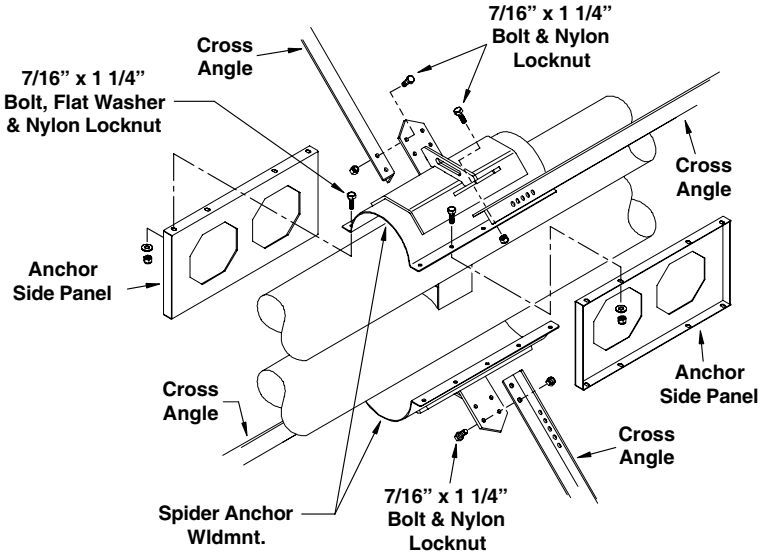

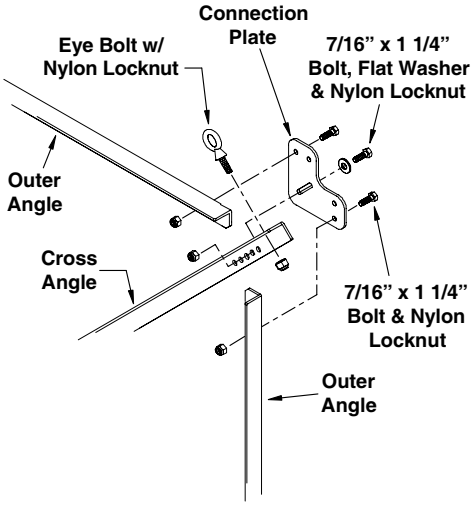

For Large Spider on 66' to 100' Applications

9. Attach the spider half-bands and anchor side panels at the predetermined location(s) previously marked. Use 7/16" x 1 1/4" bolts, flat washers and nylon locknuts to secure into place.

10. Attach two (2) cross angles to each of the ears on the spider half-bands as shown in Fig. 4. Loosely secure the cross angles using 7/16" x 1 1/4" bolts and nylon locknuts.

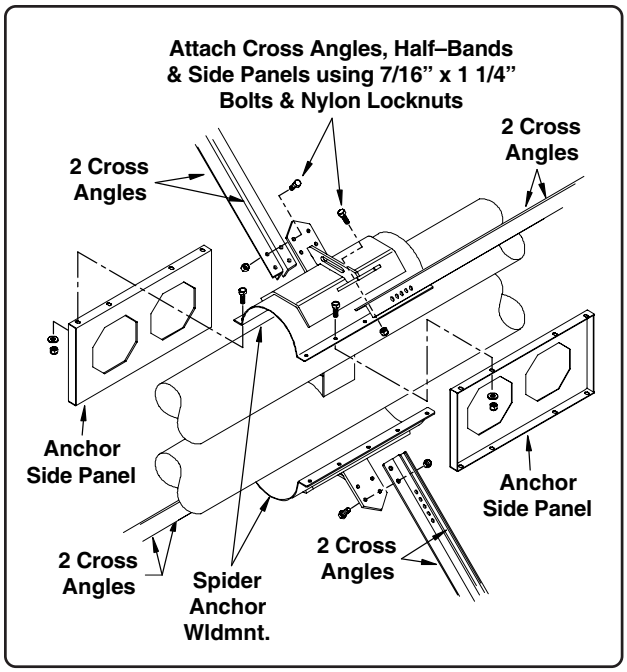

Fig.4

11. Loosely attach the corner connection plates to the ends of the cross angles using 7/16" x 1 1/4" bolts and nylon locknuts (the connection plates will be sandwiched between the two cross angles, See Fig.5).

    After the connection plates have been installed, attach the outer angles to the plates. Secure outer angles using 7/16" x 1 1/4" bolts and nylon locknuts (the connection plates will be sandwiched between the outer angles as shown in Fig. 5).

12. Install an eye-bolt onto the ends of the cross angles and secure with the 1/2" nylon locknut (orient the eye-bolt so it is parallel with the outer angles, See Fig. 5).

13. Tighten the hardware securing the outer angles to the connection plates and tighten the hardware securing the cross angles to the spider half-bands.

    It may be necessary to adjust the spider half-bands so that the outer angles are square with the tube, once properly oriented, tighten the hardware securing the half-bands **(Do Not tighten so tight that the lips of the half-bands become deformed).**

    Refer to the illustration on Page 4 for reference of the completed assembly.

    The cross angles and outer angles each have a hole located in its center, place a spacer plate in between the angles. Secure using a 5/16" x 1 1/4" bolt and nylon locknut.

    Refer to Page 7 (Steps 11 thru 13) on proper procedures for installation of the cables.

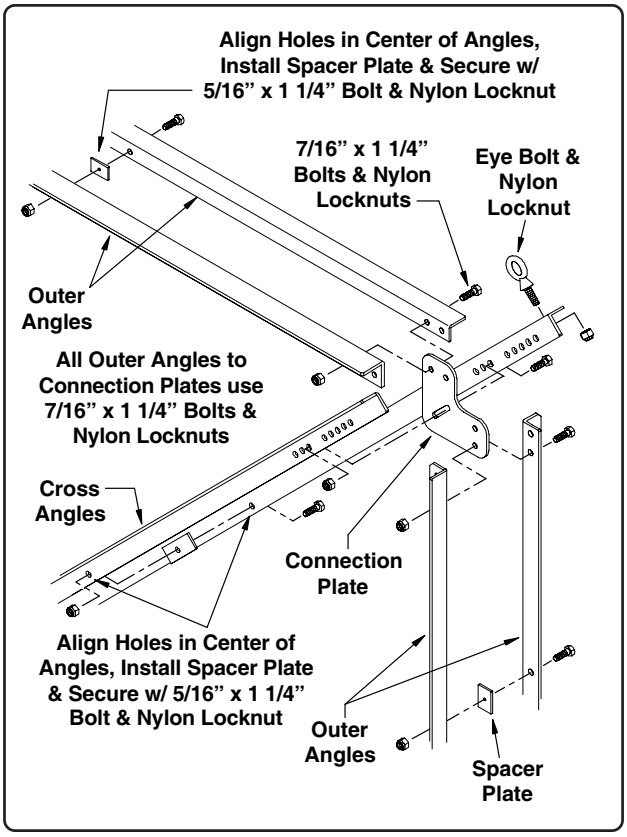

Fig. 5

Truss Kit Parts List, f/ Loop Systems

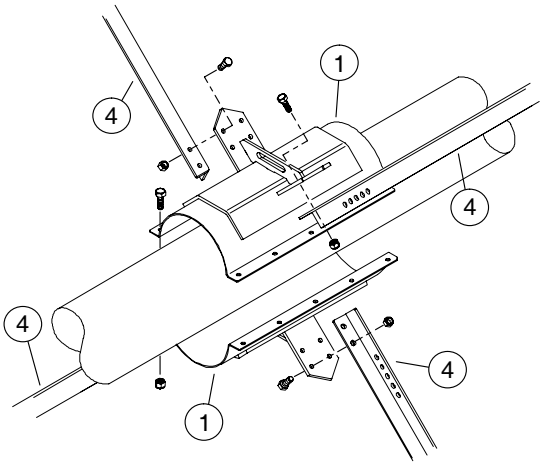

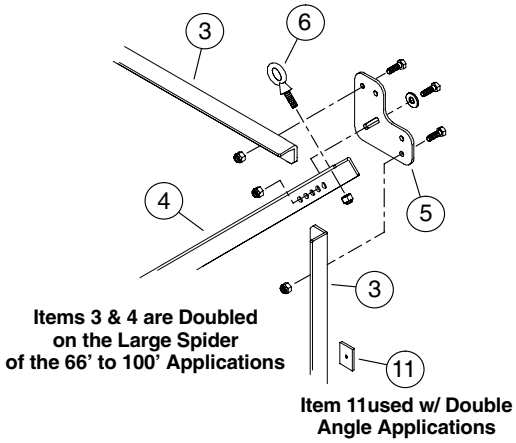

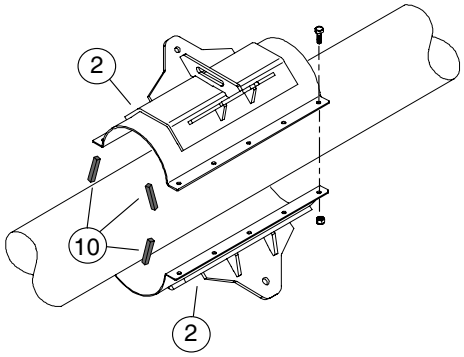

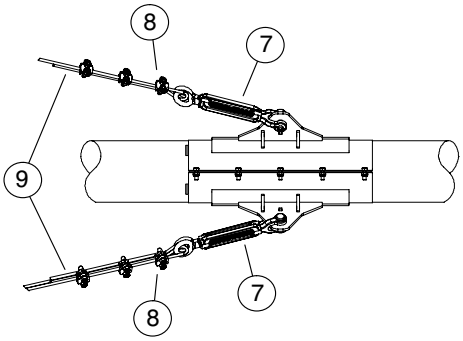

Ref. No.	Part No.	Description
1	1047019	Spider Anchor Wldmnt. f/ 6”
(1)	1045254	Spider Anchor Wldmnt. f/ 8”
(1)	1045243	Spider Anchor Wldmnt. f/ 10”
2	1047020	Anchor Half-Band f/ 6”
(2)	1045249	Anchor Half-Band f/ 8”
(2)	1045235	Anchor Half-Band f/ 10”
3	1045245	Outer Angle, 2” x 2” x 10’-8 1/2”
(3)	1045353	Outer Angle, 2” x 2” x 18’-10 1/2”
4	1045244	Cross Angle, 2” x 2” x 7’-6”
(4)	1045352	Cross Angle, 2” x 2” x 13’-4”
5	1045246	Plate, Corner Connection
6	1046115	Eye Bolt, 1/2” x 1 1/2” w/ Shoulder
7	1045374	Turnbuckle, 3/4” x 6”

Ref. No.	Part No.	Description
8	1045903	Wire Rope Clip, 3/8”
(8)	1045904	Wire Rope Clip, 1/2”
9	1018052	Cable, 3/8” dia. x 68’ long f/ 6”, 8” & 10” up to 65’
(9)	1021332	Cable, 3/8” dia. x 104’ long f/ 6” & 8” from 66’ to 100’
(9)	1033243	Cable, 1/2” dia. x 70’ long f/ 12” & 16” Loop up to 65’
(9)	1043553	Cable, 1/2” dia. x 104’ long f/ 10”, 12” & 16” from 66’ to 100’
10	4049A1	Key, 3/8” sq. x 1 1/2” long
11	1047018	Spacer Plate

Feet/Inches to metric equivalent:

3/8” . . . . *(10 mm)*	6” . . . . . *(152 mm)*	7’-6” . . . . . *(2.29 m)*	66’ . . . . . *(20.12 m)*
1/2” . . . . *(13 mm)*	8” . . . . . *(203 mm)*	10’-8 1/2” . . *(3.26 m)*	68’ . . . . . *(20.73 m)*
3/4” . . . . *(19 mm)*	10” . . . . *(254 mm)*	13’-4” . . . . . *(4.06 m)*	70’ . . . . . *(21.34 m)*
1 1/2” . . *(38 mm)*	12” . . . . *(305 mm)*	18’-10 1/2” . *(5.75 m)*	100’ . . . . . *(30.48 m)*
2” . . . . . *(51 mm)*	16” . . . . *(406 mm)*	65’ . . . . . *(19.81 m)*	104’ . . . . . *(31.70 m)*

Truss Kit Parts List, f/ Double Run Systems

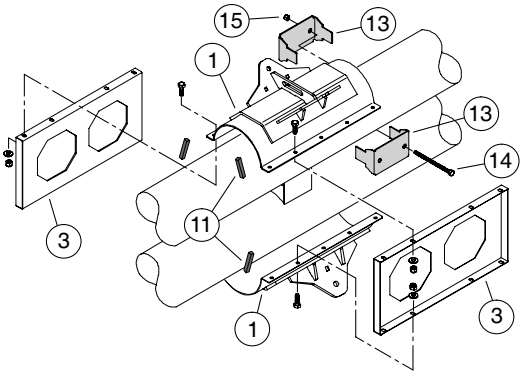

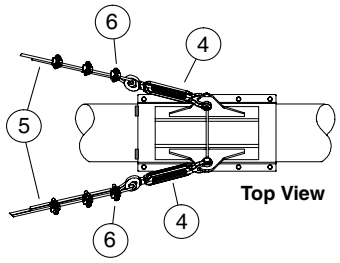

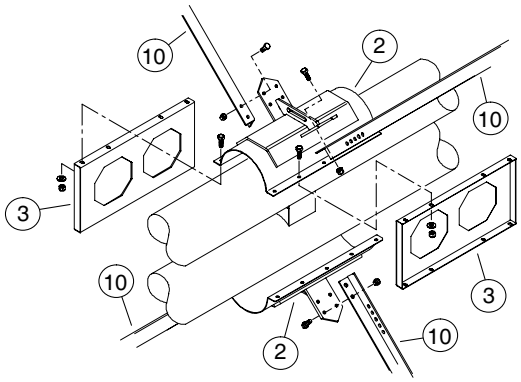

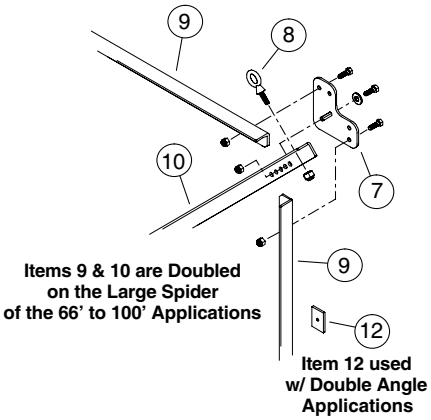

Ref. No.	Part No.	Description
1	1047020	Anchor Half-Band f/ 6”
(1)	1045249	Anchor Half-Band f/ 8”
(1)	1045235	Anchor Half-Band f/ 10”
2	1047019	Spider Anchor Wldmnt f/ 6”
(2)	1045254	Spider Anchor Wldmnt. f/ 8”
(2)	1045243	Spider Anchor Wldmnt. f/ 10”
3	1047073	Side Anchor Panel f/ 8” Double Run Only
(3)	1047131	Side Anchor Panel f/ 10” Double Run Only
4	1045374	Turnbuckle, 3/4” x 6”
5	1018052	Cable, 3/8” dia. x 68’ long f/ 8” & 10” Double Run up to 65’
(5)	1033243	Cable, 1/2” dia. x 70’ long f/ 12” Double Run up to 65’
(5)	1043553	Cable, 1/2” dia. x 104’ long f/ 8”, 10” & 12” Double Run 66’ to 100’ long
6	1045903	Wire Rope Clip, 3/8”
(6)	1045904	Wire Rope Clip, 1/2”

Ref. No.	Part No.	Description
7	1045246	Plate, Corner Connection
8	1046115	Eye Bolt, 1/2” x 1 1/2” w/ Shoulder
9	1047069	Outer Angle, 2” x 2” x 11’-6” f/ Double Run Only
(9)	1047070	Outer Angle, 2” x 2” x 18’-2” f/ Double Run Only
10	1045244	Cross Angle, 2” x 2” x 7’-6”
(10)	1045352	Cross Angle, 2” x 2” x 13’-4”
11	4049A1	Key, 3/8” sq. x 1 1/2” long
12	1047018	Spacer Plate
13	1047611	Tube Support Bracket (8” DR)
(13)	1047654	Tube Support Bracket (10” DR)
(13)	1047575	Tube Support Bracket (12” DR)
14	1047655	Bolt Weldment, 1/2” x 7 3/4” (f/ 8” & 10” Double Run)
(14)	1047584	Bolt Weldment, 1/2” x 10” (f/ 12” Double Run)
15	33138	Nut, 1/2”-13 Nylon Lock

Feet/Inches to metric equivalent:

3/8” . . . *(10 mm)*	2” . . . . *(51 mm)*	10” . . . . . *(254 mm)*	13’-4” . *(4.06 m)*	68’ . . . *(20.73 m)*
1/2” . . . *(13 mm)*	6” . . . . *(152 mm)*	12” . . . . . *(305 mm)*	18’-2” . *(5.54 m)*	70’ . . . *(21.34 m)*
3/4” . . . *(19 mm)*	7 3/4” . *(197 mm)*	7’-6” . . . . *(2.29 m)*	65’ . . . *(19.81 m)*	100’ . . *(30.48 m)*
1 1/2” . *(38 mm)*	8” . . . . *(203 mm)*	11’-6” . . . *(3.51 m)*	66’ . . . *(20.12 m)*	104’ . . *(31.70 m)*

Truss Kit Parts List, Loop & Double Run Systems

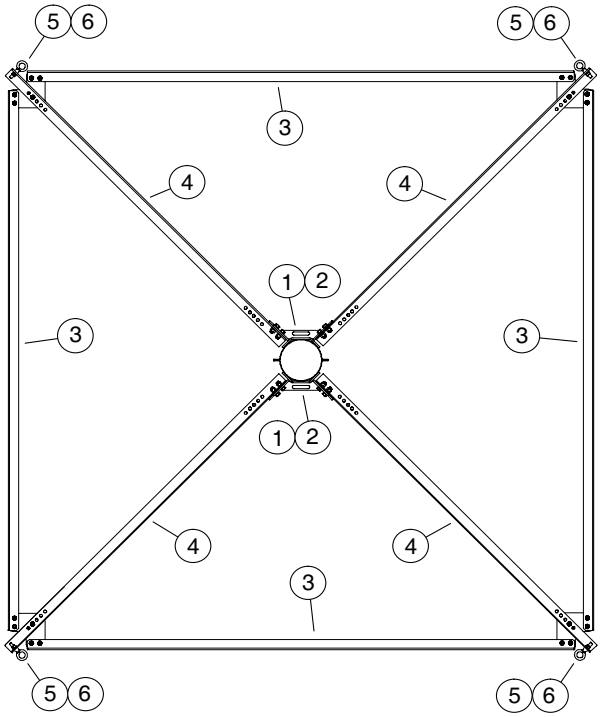

Loop System Spider Assembly
Ref. No's. from Page 11 Parts List

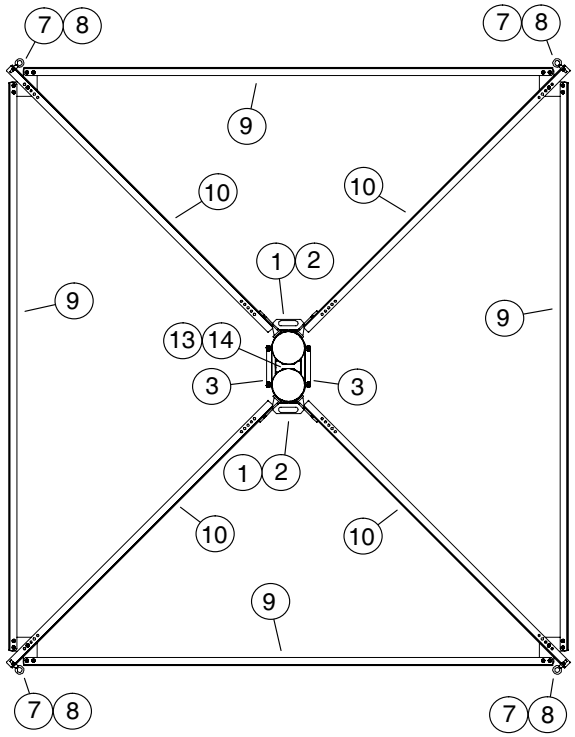

Double Run System Spider Assembly
Ref. No's. from Page 12 Parts List

General Torque Specification Table

Use the Following Torques When Special Torques Are Not Given

Note: These values apply to fasteners as received from supplier, dry, or when lubricated with normal engine oil. They do not apply if special graphited or moly-disulphide greases or other extreme pressure lubricants are used. This applies to both UNF and UNC threads.

SAE Grade No.		SAE 2				SAE 5				SAE 8*			
Bolt head identification marks as per grade Note: Manufacturing marks will vary													
		Torque				Torque				Torque			
Bolt Size		Foot Pounds		Newton·Meters		Foot Pounds		Newton·Meters		Foot Pounds		Newton·Meters	
Inches	Millimeters	Min.	Max.	Min.	Max.	Min.	Max.	Min.	Max.	Min.	Max.	Min.	Max.
1/4	6.35	5	6	6.8	8.13	9	11	12.2	14.9	12	15	16.3	20.3
5/16	7.94	10	12	13.6	16.3	17	20.5	23.1	27.8	24	29	32.5	39.3
3/8	9.53	20	23	27.1	31.2	35	42	47.5	57.0	45	54	61.0	73.2
7/16	11.11	30	35	40.7	47.4	54	64	73.2	86.8	70	84	94.9	113.9
1/2	12.70	45	52	61.0	70.5	80	96	108.5	130.2	110	132	149.2	179.0
9/16	14.29	65	75	88.1	101.6	110	132	149.2	179.0	160	192	217.0	260.4
5/8	15.88	95	105	128.7	142.3	150	180	203.4	244.1	220	264	298.3	358.0
3/4	19.05	150	185	203.3	250.7	270	324	366.1	439.3	380	456	515.3	618.3
7/8	22.23	160	200	216.8	271.0	400	480	542.4	650.9	600	720	813.6	976.3
1	25.40	250	300	338.8	406.5	580	696	786.5	943.8	900	1080	1220.4	1464.5
1 1/8	25.58	– – –	– – –	– – –	– – –	800	880	1084.8	1193.3	1280	1440	1735.7	1952.6
1 1/4	31.75	– – –	– – –	– – –	– – –	1120	1240	1518.7	1681.4	1820	2000	2467.9	2712.0
1 3/8	34.93	– – –	– – –	– – –	– – –	1460	1680	1979.8	2278.1	2380	2720	3227.3	3688.3
1 1/2	38.10	– – –	– – –	– – –	– – –	1940	2200	2630.6	2983.2	3160	3560	4285.0	4827.4

*Thick nuts must be used with Grade 8 bolts

Hutchinson/Mayrath

*A Division of **GLOBAL** Industries Inc.*

Hutchinson/Mayrath • P.O. Box 629 • Clay Center, KS. 67432
Ph. 785–632–2161 • Fx. 785–632–5964 • Toll Free 800–523–6993
www.hutchinson-mayrath.com