COMMERCIAL DRIVE-OVER CHAIN CONVEYOR

OWNER'S & OPERATOR'S MANUAL

Effective March 8, 2016 **Publication No. 1041811**

This Manual is for Units with Serial No's. 958853 and Higher

Models:
CDC10002E8
CDC10002E8-XR
CDC10002E8-XFR

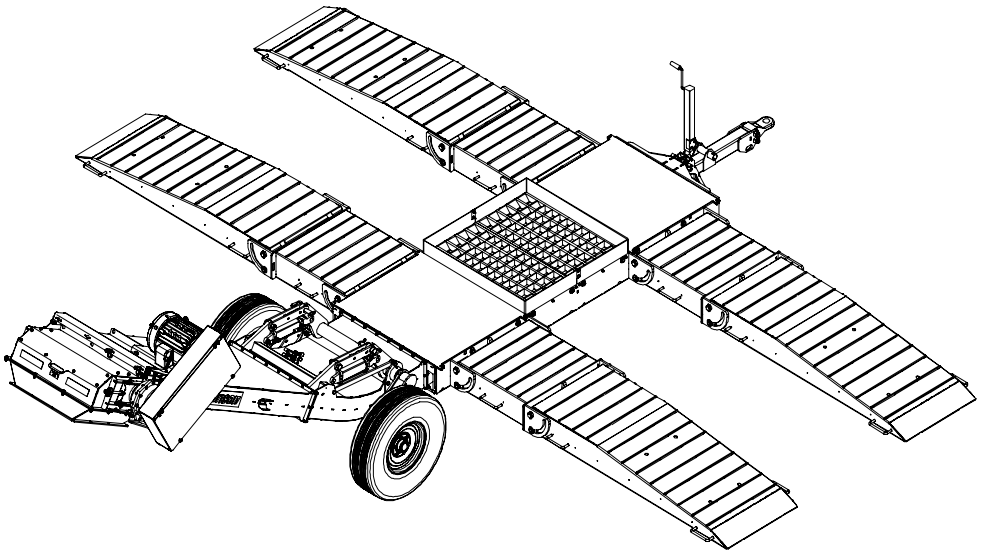

IMPORTANT! The reducer gear box for the Conveyor is shipped **Without Oil.**
Oil must be added before conveyor operation.

Hutchinson/Mayrath
*A Division of **GLOBAL** Industries Inc.*

Hutchinson/Mayrath • P.O. Box 629 • Clay Center, KS. 67432
Ph. 785–632–2161 • Fx. 785–632–5964 • Toll Free 800–523–6993
www.hutchinson-mayrath.com

Hutchinson/Mayrath

*A Division of **GLOBAL** Industries, Inc.*

POLICIES AND PROCEDURES

Prices: Prices in effect at time of shipment will apply. Prices are subject to change without notice. All prices are F.O.B. Clay Center, Kansas. Orders shipped from locations other than Clay Center, Kansas will be subject to additional charges, such as back freight and/or additional freight.

Service Charge: A service charge will be assessed for all past due balances as permitted by state law not to exceed 1-1/2% per month.

Minimum Order: Processing and handling costs necessitate a minimum charge of $15.00 net on all orders.

Back Orders: Back orders will be shipped as they become available. Contact Hutchinson/Mayrath Customer Service for alternative shipping options or if cancellation is desired.

Damaged Goods: It is the consignee's responsibility to check all shipments thoroughly upon receipt of goods. If any damage is discovered, it must be noted on the freight bill of lading before signing. The consignee must make necessary claims against the respective freight line. All damage claims must be submitted within 30 days of delivery receipt.

Shortages: All shortages must be noted at time of delivery. Shortages must be noted on the freight bill of lading before signing. Hutchinson/Mayrath must be advised of all concealed shortages upon discovery. Once notified of concealed shortages Hutchinson/Mayrath will advise corrective action to be taken.

Return of Goods: All returns must be approved by Hutchinson/Mayrath prior to shipment. All return requests will be issued a return authorization number. NO RETURNS WILL BE ACCEPTED WITHOUT A RETURN AUTHORIZATION NUMBER AND PRIOR AUTHORIZATION FROM THE FACTORY. All returns must be shipped prepaid. A 15% restocking charge will be applied to all returned merchandise. Custom Products may not be returned for credit. Only current products in new and salable condition may be returned. No safety devices may be returned for credit.

Modifications: It is the policy of Hutchinson/Mayrath to improve its product whenever possible and practical to do so. We reserve the right to make changes, improvements and modifications at any time without incurring the obligation to make such changes, improvements and modifications on any equipment sold previously.

Limited Warranty: (a) For a period of (1) year after receipt of goods by the original consumer buyer, Hutchinson/Mayrath will supply free of charge replacement parts for parts that prove defective in workmanship or material. Defective parts must be returned freight prepaid to a specified Hutchinson/Mayrath location. Only Hutchinson/Mayrath original repair parts may be used for warranty repairs.
(b) This limited warranty does not extend to parts designed to wear in normal operation and be replaced periodically; or to damage caused by negligence, accident, abuse or improper installation or operation.
(c) GOODS NOT MANUFACTURED BY HUTCHINSON/MAYRATH CARRY ONLY THE MANUFACTURER'S WARRANTY.
(d) THIS UNDERTAKING IS IN LIEU OF ALL OTHER WARRANTIES, EXPRESSED OR IMPLIED, INCLUDING MERCHANTABILITY AND FITNESS FOR A PARTICULAR PURPOSE.

FAILURE TO FOLLOW THE INSTRUCTIONS CONTAINED IN THE OWNER'S & OPERATOR'S MANUALS AND THE ITEMS LISTED BELOW WILL RESULT IN THE VOIDING OF THIS LIMITED WARRANTY.

(1) Improper assembly, including failure to properly install all safety equipment.
(2) Improper installation.
(3) Unauthorized alternations of goods.
(4) Goods operated when obviously in need of repair.
(5) Use of unauthorized repair parts.
(6) Irresponsible operation.
(7) Used to handle materials other than free flowing, nonabrasive and dry materials, as intended.
(8) Damaged through abusive use or accident.

Limitation of Liability: BUYER AGREES THAT IN NO EVENT SHALL HUTCHINSON/MAYRATH HAVE LIABILITY FOR DIRECT DAMAGES THE EXCESS OF THE CONTRACT PRICE OF THE GOODS IN RESPECT OF WHICH CLAIM IS MADE. BUYER FURTHER AGREES THAT IN NO EVENT SHALL HUTCHINSON/MAYRATH ON ANY CLAIM OF ANY KIND HAVE LIABILITY FOR LOSS OF USE, LOSS OF PROFITS, OR FOR ANY INDIRECT, INCIDENTAL OR CONSEQUENTIAL DAMAGES.

TABLE OF CONTENTS

GENERAL SAFETY STATEMENT

This manual was written with the safety of the operator and others who work with the equipment as our prime concern. The instructions presented will help the reader learn **SAFE** day to day work practices. We want you as our partner in safety.

It is your responsibility as an owner, operator or supervisor to know what specific safety requirements and precautions exist and to make these known to all other personnel working with the equipment or in the area, so that they too may safely perform their duties and avoid any potentially hazardous situations.

We suggest the implementation of a Safety Program for all personnel that includes, but is not limited to, the proper use of PPE (personal protective equipment), Fall Protection Systems and Lock Out-Tag Out procedures.

Please remember safety equipment provides important protection for persons around a grain handling system that is in operation. Be sure **ALL** safety shields and protection devices are installed and properly maintained. If any shields or guards are damaged or missing, contact your dealer to obtain the correct items.

Avoid any alterations of the equipment. Such alterations may create a dangerous situation where serious injury or death may occur.

SAFETY ALERT SYMBOL

The safety symbol shown is used throughout this manual to alert you to information about unsafe actions or situations, and will be followed by the word DANGER, WARNING, or CAUTION.

DANGER - Indicates immediate hazards that may result in severe injury or death. **WARNING** - Indicates unsafe actions or situations that may cause severe injury, death and/or major equipment or property damage. **CAUTION** - Indicates unsafe actions or situations that may cause injury, and/or minor property damage.

Watch this symbol - it points out important safety precautions. It means - **ATTENTION! Become alert! Your safety and the safety of others is involved!** Read the message that follows the symbol when a warning is given, be alert to the possibility of personal injury or death.

BE ALERT!
YOUR SAFETY IS INVOLVED

Follow Safety Instructions

Carefully read all safety messages in this manual and safety signs on your machine. Check to ensure all Safety Decals are present and in good condition.

If a decal cannot easily be read for any reason, or has been painted over, replace the decal immediately. Safety decals are offered free of charge, and can be ordered through your Hutchinson/Mayrath dealer or directly from the factory.

Learn how to operate the machine and how to use controls properly.

Keep your machinery in proper working condition. Understand service procedures before doing work. Never lubricate, service or adjust machine while it is in operation.

Keep work area clean, dry and free from of all debris and tools which may cause accidental tripping or falling.

Read and Understand Manual

Understand Service Procedures

Keep Work Area Clean

Prepare for Emergencies

Keep emergency numbers for doctors, ambulance service, hospital and fire department near your telephone.

Keep a first-aid kit and fire extinguisher handy.

Be prepared if a fire starts.

First Aid Equipment

Fire Extinguisher

Wear Proper PPE (Personal Protective Equipment)

Some materials can create flying debris when they are filed, cut or drilled. Safety glasses should be worn at all times to protect your eyes from such debris.

Hearing protection should be worn when operating power tools or other power equipment that could be harmful to your hearing.

Gloves should be worn to protect your hands from sharp metal and plastic edges, as well as providing protection from the handling of heavy objects.

Wear steel toe boots to protect your feet from falling debris.

Wear a hard hat to help protect your head from falling objects as well as from accidental bumping.

Use caution when working at elevations greater than four (4) feet *(1.22 m)* above the ground.

Use the appropriate fall protection equipment as set forth by OSHA guidelines and regulations.

A respirator may be needed to prevent breathing potentially toxic fumes and dust, especially when working within a grain bin or storage structure.


Eye & Hearing Protection


Gloves


Steel Toe Boots


Hard Hat


Fall Protection

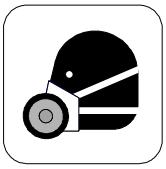
Respirator

Operate Electric Motor(s) Properly

Do not operate electric motor equipped units until motor(s) are properly grounded.

Know how to "Shutdown and Lockout" the power source. Shutdown and lockout power source before performing any service, maintenance or adjustments to the unit.

Disconnect power on electrical driven units before resetting motor overloads.


Lockout / Tagout


Electric Shock Hazard

Stay Clear of Moving Parts

Keep all shields, covers and safety devices in place at all times.

Entanglement in moving chains and sprockets will cause serious injury or death.

Wear close fitted clothing. Keep hands, feet and clothing away from moving parts.

Shutdown and lockout power source before making adjustments, cleaning or maintaining the equipment.


Entanglement Hazards

GRAIN BIN SAFETY

The Commercial Drive-Over Chain Conveyor is designed to receive grain from the hoppers on a trailer and discharge into a conveyor system which then moves the grain into grain bins or other storage structures.

Be aware of the dangers inherent in grain bins.

Consult the grain bin manufacturer's manual for information on the proper loading and unloading of the bins, structural stress analysis, adequate venting and important safety information.

WARNING! Do Not enter the bin if the grain has "Bridged" or has not flowed normally out of the bin, See Example's 1 & 2. The grain may suddenly break loose and bury resulting in suffocation.

Do Not enter the bin unless all power driven equipment has been shut down and locked out.

Never enter the bin unless monitored by another person.

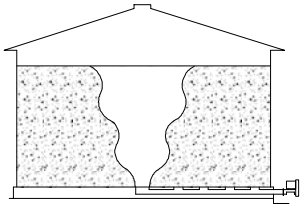

Example 1
(Abnormal Flow)

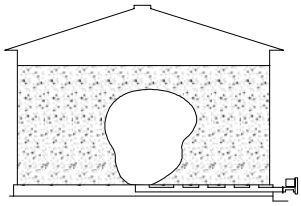

Example 2
("Bridging")

SAFETY DECALS

Check to ensure all Safety Decals are present and in good condition. If a decal cannot easily be read for any reason, or has been painted over, replace the decal immediately. Safety decals are offered free of charge, and can be ordered through your Hutchinson/Mayrath dealer or directly from the factory.

Refer to the Parts List Section for decal Part No's. and location of decals on components.

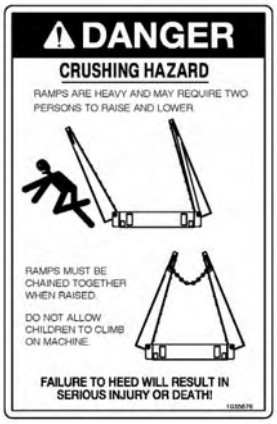

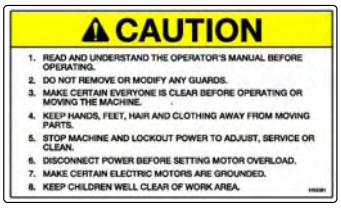

OPERATOR QUALIFICATIONS

WARNING!

Anyone who will operate or work around this machine shall first read this manual! This manual must be delivered with the equipment to its owner. Failure to read this manual and its safety instructions is a misuse of the equipment.

Operation of this conveyor system shall be limited to competent and experienced persons. In addition, anyone who will operate or work around a conveyor must use good common sense. In order to be qualified, he must also know and meet all other requirements, such as:

1. Some regulations specify that no one under the age of 16 may operate power machinery. This includes this conveyor. It is your responsibility to know what these regulations are in your area or situation.
2. Current OSHA regulations state in part: "At the time of initial assignment and at least annually thereafter, the employer shall instruct every employee in safe operation and servicing of all equipment with which the employee is, or will be involved." *
3. Unqualified persons are to stay out of the work area. See Page 6.
4. A person who has not read and understood all operating and safety instructions is not qualified to operate the machine.
5. Persons operating, servicing or repairing equipment that requires above ground work shall be properly secured with the use of "fall protection" equipment as set forth by OSHA guidelines and regulations.

***Federal Occupational Safety & Health Standards for Agriculture Subpart D, Section 1928.57 (a) (6).**

SIGN OFF SHEET

As a requirement of OSHA, it is necessary for the employer to train the employee in the safe operation and safety procedures with this conveyor. We include this sign off sheet for your convenience and personal record keeping.

Training Sign-Off Sheet

Date	Employer Signature	Employee Signature

SERIAL NUMBER

To ensure efficient and prompt service, please furnish us with the model and serial number of your conveyor in all correspondence or other contact. The serial plate is located on the drive head assembly of the Drive-Over Conveyor.

RIGHT & LEFT SIDE DESIGNATION

When referencing the left, right, front or rear of the unit, it is always determined by standing at the hitch end of the conveyor and looking towards the discharge end.

MACHINE INSPECTION

After completion of assembly and before each use, inspection of the machine is mandatory. This inspection should include, but not be limited to:

1. Inspect the conveyor for loose bolts, missing chain parts, missing or damaged paddles and the overall chain condition.
2. Check chain tension. Check the condition and tension of drive belts and adjust as necessary.
3. Inspect sheaves for alignment and see that they are securely fastened.
4. Check oil level in drive reducer.
5. Check all safety signs and replace any that are worn, missing or illegible.
6. Check that all safety devices, guards and shields are installed and that all grates and covers are properly in place.

START-UP and BREAK-IN INFORMATION

WARNING! During initial start-up and break-in period, the operator shall be aware of any unusual vibrations or noises that would indicate a need for service or repair.

Keep all safety shields and devices in place. Keep hands, feet, and clothing away from moving parts.

The operator should have a full view of the conveyor work area and ensure that all personnel are away from the designated work areas before adding power to the equipment.

It is essential to inspect your conveyor and drive components before adding power and to know how to shut down in an emergency. During the operation of your conveyor, one person shall be in a position to monitor the operation.

During the initial start-up and break-in period, the operator should watch for any unusual vibrations or noises.

Any conveyor, when it is new or after it sits idle for a season, should go through a “break-in” period. It should be run at partial capacity at full speed until the inside of the housing becomes polished, before attempting full capacity. A failure will most likely occur when it is run at full capacity before it has a chance to “shine up”.

If at all possible, do not start or stop the conveyor under load, especially before the housing becomes well polished, as this may cause the unit to stall.

ELECTRIC MOTOR DRIVE INFORMATION

WARNING! A main power disconnect switch that can be locked in only the “OFF” position shall be provided. This shall be locked whenever work is being done on the conveyor.

The reset and starting controls must be located so that the operator has full view of the entire operation.

Do Not enter the grain bin unless all power driven equipment has been shut down and locked out.

Make certain electric motor is grounded.

Disconnect power before resetting motor overloads.

Shut off power and lockout whenever cleaning or servicing the conveyor.

Power Requirements f/ Commercial Drive-Over Chain Conveyor

Always use a motor with required HP *(kw)* as stated below. Use a 60 hz motor that operates at 1750 rpm *(50 hz @ 1460 rpm).* ***Units using 50 hz motors require different drive pulleys, consult factory for specifications.***

Electrical motor and controls shall be installed by a qualified electrician and must meet the standards set by the National Electrical Code and all local and state codes.

A magnetic starter should be used to protect your motor when starting and stopping. It should stop the motor in case of power interruption, conductor fault, low voltage, circuit interruption or motor overload. Then the motor must be restarted manually.

Some motors have built-in thermal overload protection. If this type motor is used, use only those with a manual reset.

Install with an ampmeter on motor so that the load can always be monitored to prevent overloading.

A main power disconnect switch that can be locked only in the **“Off”** position shall be installed. This shall be locked whenever work is being done to the conveyor.

Recommended Electric H.P.	Motor Frame Size	Recommended Motor Pulley*
15 H.P.	254T	7.4” P.D.

***The motor pulley is furnshed with the unit.**

P.D. = Pitch Diameter

DESIGNATED WORK AREA

WARNING! Under no circumstances should persons not involved in the operation be allowed to trespass into the work area.

It shall be the duty of all operators to see that children and/or other persons stay out of the work area! Trespass into the work area by anyone not involved in the actual operation, or trespass into a hazard area by anyone shall result in an immediate shutdown by the operator.

It shall be the responsibility of all operators to see that the work area has secure footing, is clean and free of all debris and tools which might cause accidental tripping and/or falling. It shall also be their responsibility to keep the work area clean and orderly during the operation.

WARNING! Use caution when working in areas above the ground. Persons operating, servicing or repairing equipment that requires above ground work shall be properly secured with the use of "fall protection" equipment as set forth by OSHA guidelines and regulations.

Metal buildings, scaffolding and other types of work surfaces can become slippery, especially when surfaces are wet and/or oily. This can create hazardous working conditions. Use caution when working, climbing or walking on these surfaces.

The area around the conveyor and inside the grain storage units is considered the work area. Use the following to ensure a safe working environment.

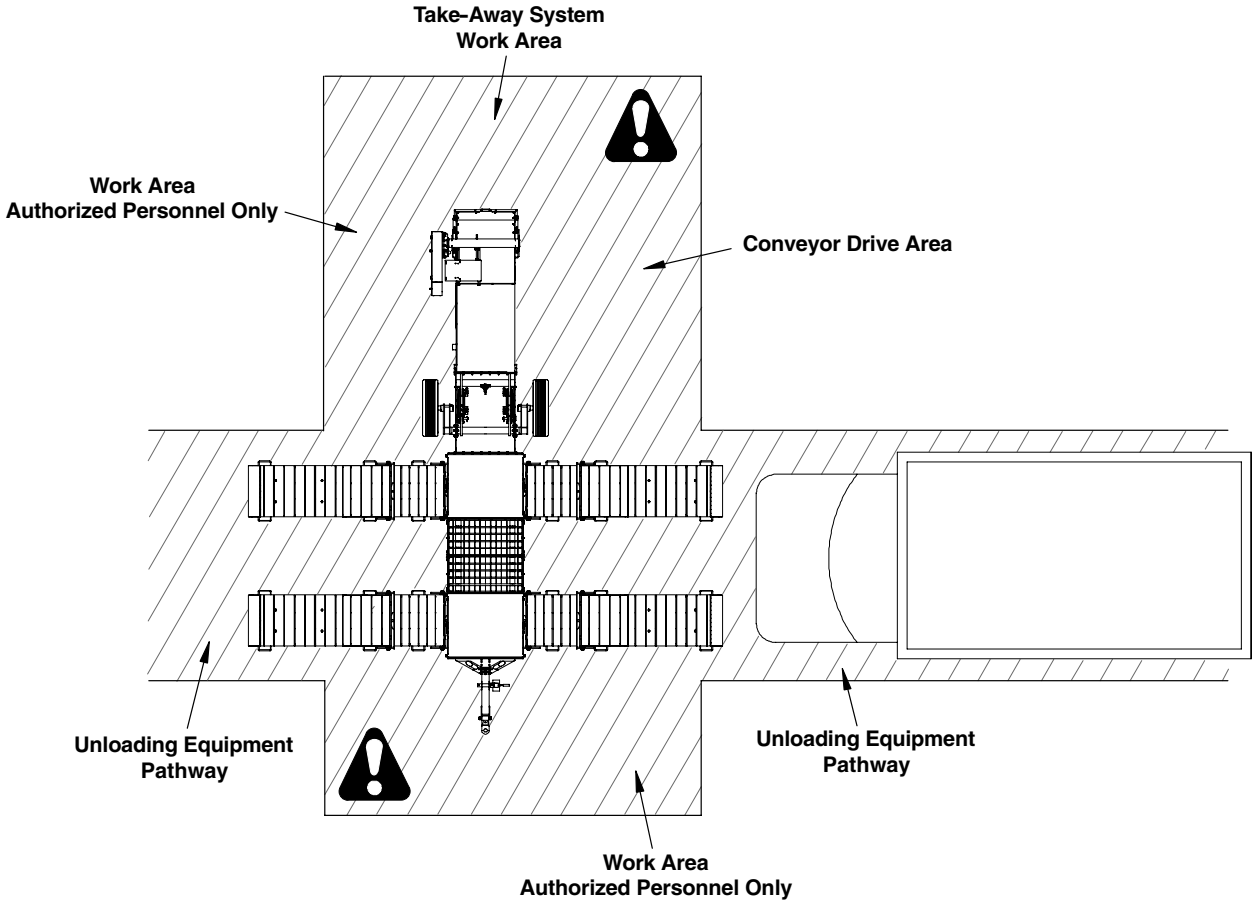

OPERATING PROCEDURES

WARNING! Make certain everyone is clear before operating the equipment.

The operator shall be aware of any unusual vibrations or noises that would indicate the need for service or repair.

Keep all safety shields in place.

Keep hands, feet and clothing away from moving parts.

The operator shall have a full view of the entire work area and check that all personnel are clear of the designated work area before adding power.

If the operator must leave the work area, or whenever servicing or adjusting, the conveyor must be stopped and the power source turned off and locked out.

Precaution should be made to prevent anyone from operating the conveyor when the operator is absent from the work area.

The reset and starting controls must be located so that the operator has full view of the entire operation.

Do Not enter the grain bin unless all power driven equipment has been shut down and locked out.

Make certain electric motor is grounded.

Disconnect power before resetting motor overloads.

Shut off power and lockout whenever cleaning or servicing the conveyor.

1. Start the conveyor for operation. Open trailer gates gradually until desired grain flow has been obtained. **At initial start-up, check to make sure the flow of grain is matching the capacity of the conveyor, it is also critical to ensure that the take-away conveyor (or, auger) is matching or exceeding the capacity of the conveyor.**

   Monitor motor load to ensure conveyor is not being overloaded. If, in rare occasions, overload is detected, reduce the flow of grain into the conveyor.

   After grain flow from dump vehicle has stopped, allow the conveyor to clean itself out, then **shut down and lock out the power source.**

   Never start the conveyor under load.

   The cover panels on the conveyor can be removed to increase the area for grain dumping.

The cover panels can be removed together or they can be removed separately (See Fig. 1). Keep in mind, if the cover panels are removed, that the flow of grain must not exceed the capacity of the conveyor.

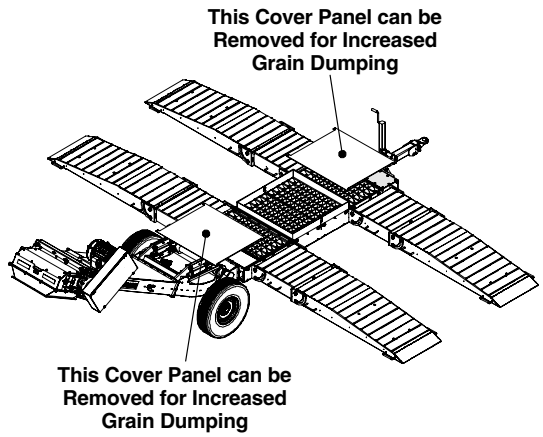

Fig. 1

EMERGENCY SHUTDOWN

Should the machine need to be immediately shut down under full load, **disconnect** and **lockout** the power source. Clear as much grain from the conveyor as possible. Remove covers and grates as needed to access conveyor channels.

Never attempt to restart when full. Starting the unit under full load may result in damage. Such damage is considered abuse of the equipment and will void all warranties.

NORMAL SHUTDOWN

Close flow controls from dump vehicle and allow the conveyor to empty before stopping the unit.

Before the operator leaves the work area, the power source shall be locked out.

INTERMITTENT SHUTDOWN

When a conveyor is stopped and started under full load, it may result in damage to the conveyor. Therefore, if intermittent operation is to be carried out, it is advisable to reduce the load level.

If a conveyor is kept from absolute filling, it will make start-up easier and will convey grain more efficiently.

LOCKOUT

The power source shall have a main disconnect box that can be locked only in the **"Off"** position. This is what "shutdown and lockout" refers to, shut off the main power source and lock handle or breaker switch in the **"Off"** position.

DRIVE-OVER CONVEYOR MAINTENANCE

Chain Adjustment

To adjust the chain to proper tension, loosen the four (4) carriage bolts on each side of the head (total of eight carriage bolts), See Fig. 2.

Turn the adjustment bolts on each side equally in small increments to keep the head shaft square. Continue adjustment until there is approximately 85° of rotation when the paddle is rotated up towards the chain (See Fig. 3 below). **Chain tension can be checked by reaching up through the discharge opening and rotating the paddles.**

After proper tension has been achieved, tighten carriage bolts and jam nuts on adjustment bolts.

Note: There is also an access cover that when removed, allows access to the sprockets, shafts and chains.

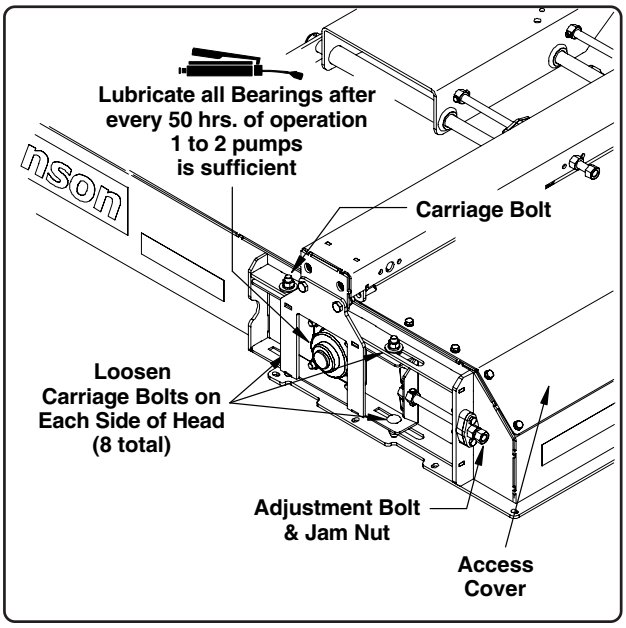

Fig. 2

Check paddles regularly for wear and/or breakage. Ensure all hardware securing the paddles to the chain brackets is tight and all bolts and nuts are still intact.

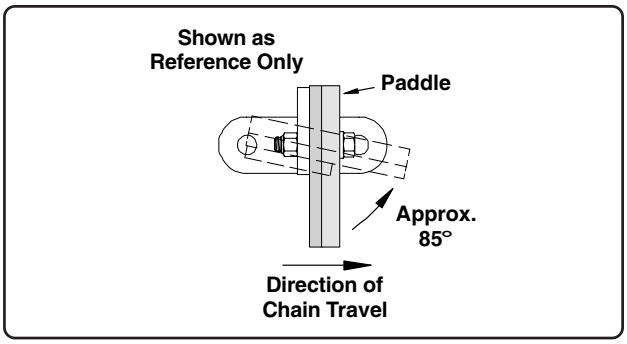

Fig. 3

The life of the conveyor chain will be shortened when the chain is allowed to sit in water or is operated in acidic conditions, so avoid these situations as much as possible. **To extend chain life,** spray a light coat of vegetable oil on the chain after each season's use.

Bearing Lubrication

The tail shaft and head section have a set of bearings that require periodic maintenance (See Fig's. 2 and 4). The bearings are sealed ball bearings and have been pre-lubricated at the factory.

Lubricate (1 pump) every 50 hours of operating time using an SAE multi-purpose type grease.

To prevent contamination of the bearings, make sure lubrication fittings (grease zerks) are free of dirt or debris before lubrication.

Ensure that all hardware securing the bearings is tight and that eccentric collars are secure.

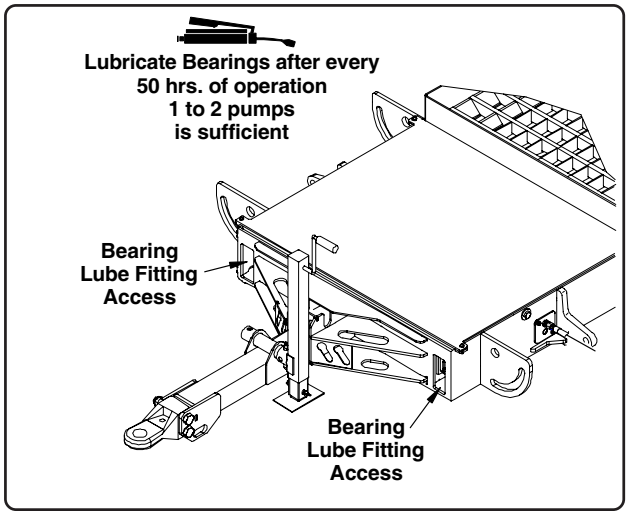

Fig. 4

DRIVE-OVER CONVEYOR MAINTENANCE (con't,)

Gearbox Oil Level

IMPORTANT! Because the gear reducer is shipped without oil. It is necessary to add the proper amount of oil before conveyor operation.

Use a high grade petroleum base, rust and oxidation inhibiting (R&O) gear oil such as a **320 ISO Grade** gear oil for ambient temperatures from 50°F *(10°C)* to 125°F *(51.6°C)*.

For operation in ambient temperatures other than stated above, refer to the manual that is provided with the reducer gearbox for specific grade of oils. The manual will reference the reducer as TA2115H.

Capacity: 1.2 qts. *(1.2 L)*.

Reducer Type: Dodge TA2115H05

Under normal industrial operating conditions, the lubricant should be changed every **2500 hours of operation or every six (6) months**, whichever occurs first. Drain the reducer and flush it with kerosene, clean the magnetic drain plug and refill reducer to its proper level with new lubricant.

CAUTION: Too much oil will cause overheating and too little oil will result in gear failure. Check oil level regularly.

Under extreme operating conditions, such as rapid rise and fall of temperature, dust, dirt, chemical particles, chemical fumes or oil pump temperatures above 200°F *(93.3°C)*, the oil should be changed every **1 to 3 months** depending on severity of conditions.

Before Conveyor Operation, Oil will have to be Added to the Reducer Gearbox

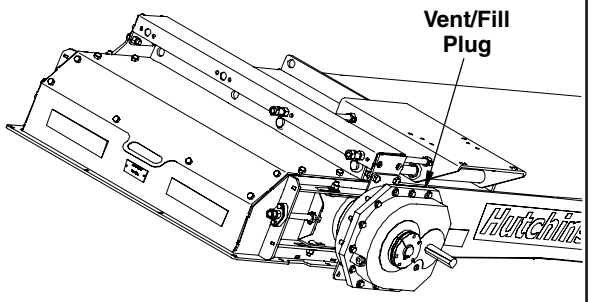

Capacity: 1.2 qts. *(1.2 L)*
Use a 320 ISO Grade R&O Gear Oil

See Reducer Manual for Additional Information

Fig. 5

Motor Belt Tension

To adjust the motor belt tension, loosen jam nuts on motor mount adjustment bolts, turn adjustment bolts in equal increments until proper belt tension has been achieved. Tighten the jam nuts to lock into place (See Fig. 6 below).

Proper belt tension is approx. 1/2" *(13 mm)* of deflection per belt when firmly pressed at the center of the span between the two sheaves.

Check belts for tightness, fraying or other damage. Replace as necessary. **Belt Type: B-59**

Check that sheaves are properly aligned and all hardware securing the sheaves is tight. Make sure belt guard is in good condition and properly secured.

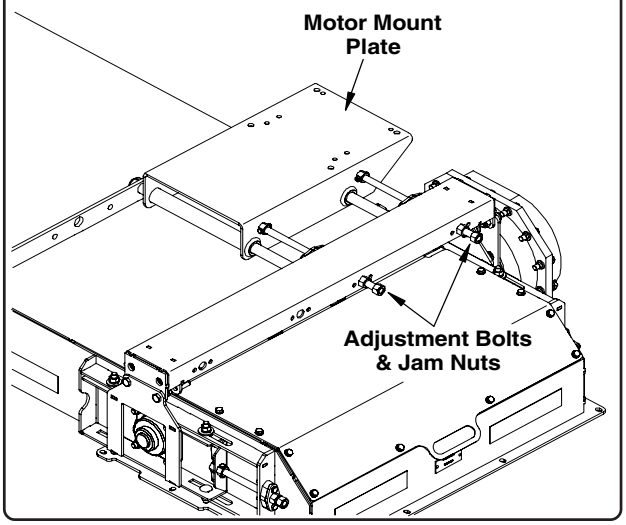

Fig. 6

DRIVE-OVER CONVEYOR ASSEMBLY

WARNING! Keep hands, arms , legs and other body parts out from under the conveyor sections when sections are in the raised position.

Use proper PPE (personal protective equipment) when working with this type of equipment.

When assembling the Commercial Drive-Over Conveyor, pay attention to the center divider panels in each trunk section. The overlap on these dividers is critical for proper conveyor operation. If the center dividers are not overlapped as shown, damage to the paddles and chain will occur.

Assembly of the conveyor is the same no matter which ramp extensions (or no extensions) are used.

1. Hoist hopper assembly up onto a couple of heavy duty support stands [24" *(61.0 cm)* tall works well]. Each stand should be rated at 2,000 lbs. *(907 kg)* or more, hopper assembly alone weighs 2,350 lbs. *(1066 kg)*.
2. Before attaching 30° corner to hopper, run a 3/8" tap through the 8 weldnuts on the top flange of the hopper assembly (See illustration below). Make sure both mating flanges (hopper to corner) are smooth and free of weld spatter before joining together. When making the connection ensure the center divider panel of the 30° corner goes **under** the corresponding panel of the hopper (See illustration below).
3. Using 3/8" x 1 1/4" bolts and lock washers, attach the corner to the hopper installing the eight (8) bolts into the weldnuts first (use an alignment punch in bottom holes to help with hole alignment if necessary).

   For the remaining corner-to-hopper flange holes, use 3/8" x 1 1/2" bolts and nylon locknuts. Tighten all hardware.

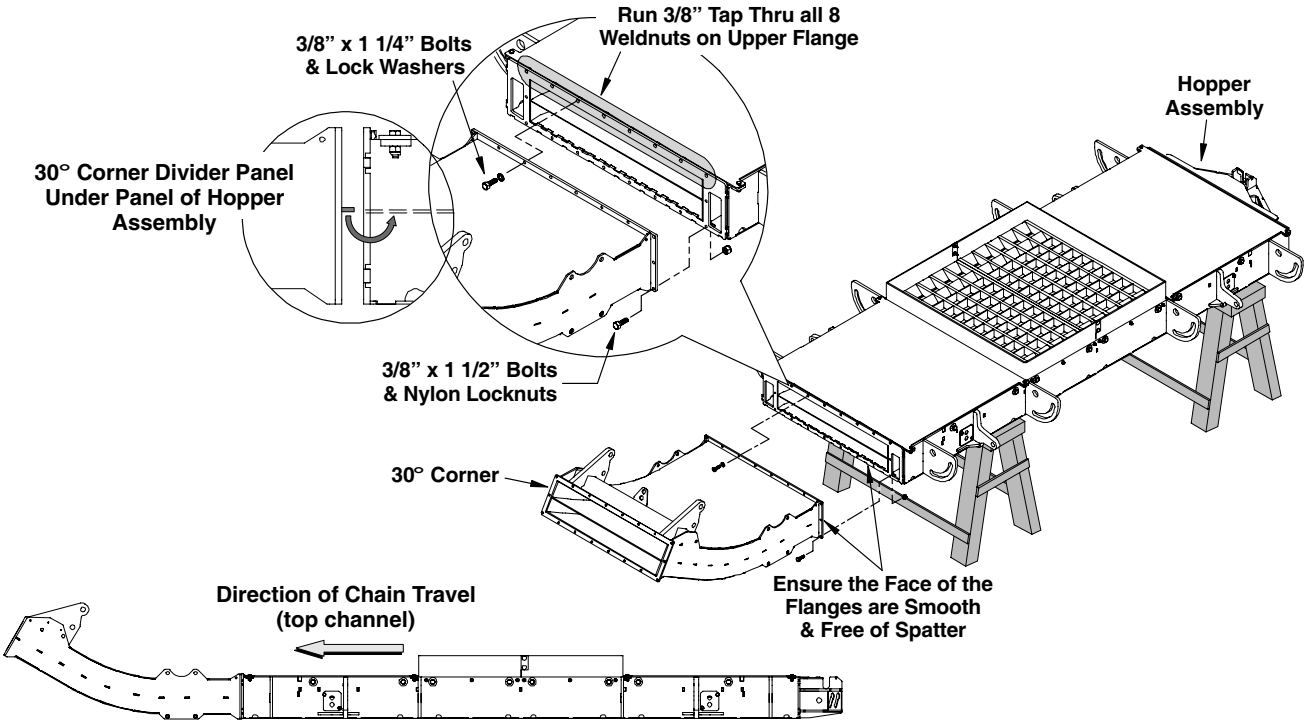

DRIVE-OVER CONVEYOR ASSEMBLY (con't.)

WARNING! Keep hands, arms , legs and other body parts out from under the conveyor sections when sections are in the raised position.

Use proper PPE (personal protective equipment) when working with this type of equipment.

4. Clean the mating flanges of the head to corner assemblies to ensure they are free of weld spatter and rough edges. Raise the head assembly with overhead hoist so that it hangs freely at a 30° angle (use caution as the unit weighs 900 lbs. *(408 kg)*.

   Align head flange with corner flange and ensure the center divider panel in the head section is under the divider panel of the 30° corner section (See illustration below).

   Using an alignment punch, install a 3/8" x 1 1/2" bolt with nylon locknut at each lower corner of the flanges (nuts going on discharge side of flange, See illustration below). Snug these bolts but do not tighten at this time.

5. Use the hoist to assist with keeping the head to corner flanges parallel and install the remaining 3/8" x 1 1/2" bolts and nylon locknuts. Tighten all hardware. **Note: Make sure flanges are flush when bolts are tightened to ensure quiet conveyor operation.**

   IMPORTANT! Before releasing the overhead hoist, position a support stand beneath the head-to-corner flange as additional support. After the support stand is positioned properly the hoist can be removed.

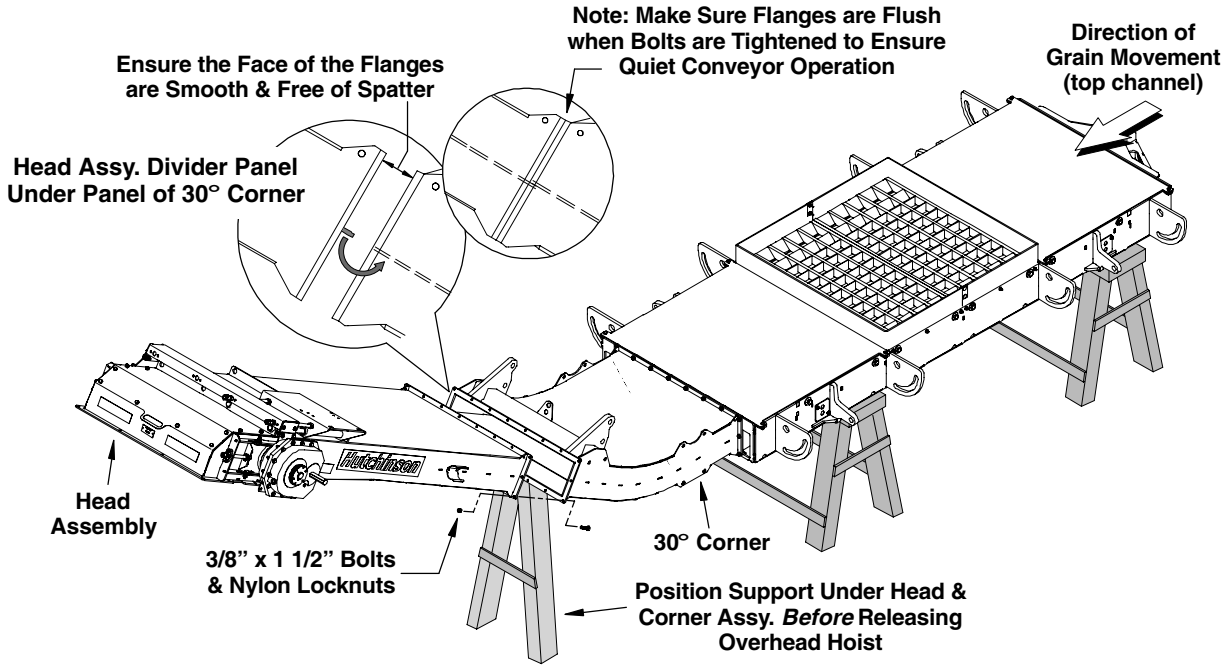

DRIVE-OVER CONVEYOR ASSEMBLY (con't.)

CHAIN & PADDLE ASSEMBLY

1. Remove the hopper cover and the 11" x 43" cover plate that covers the tail shaft, from the hitch end of the unit (See illustration below). Feed a wire or snake over the head shaft at the discharge end in the upper chamber of the head assembly to the hitch end (a large tape measure works well to pull the wire into position).

   Position a section of chain at the discharge end so the **paddle brackets on the chain have the open slots facing down** (See illustration below). Attach the wire onto the end of the chain and from the hitch end, pull the chain through the channel until the next section of chain can be connected (stay off the sprockets for now). Connect the next section of chain to the first using the connecting links provided (cotter pins to the inside).

   Continue pulling the chains until the third chain section can be connected. Repeat these procedures on the opposite side of the upper channel, when finished there should be three (3) 10'-10 7/16" chain sections on the left and three (3) 10'-10 7/16" chain sections on the right (leave end of chains near tail shaft). When chains have been pulled through it is a good idea to temporarily wire each end to something to keep them from sliding and moving out of position.

2. Feed a wire or snake into the bottom channel from the discharge end. Attach the fourth 10'-10 7/16" section of chain to the wire and using an assistant to feed the chain into the bottom channel, pull the chain towards the discharge end **(make sure the open slots of the chain brackets are facing upward).**

   Connect the end of the chain to the chain from the upper channel. Continue guiding and pulling the chains towards the discharge end until the ends of the upper and lower channel chains can be connected at the discharge end. Repeat this procedure on the opposite side of the bottom channel.

3. Position the chains over the tail shaft sprockets making sure each chain is on their respective sprocket and that they are in time with each other (not offset).

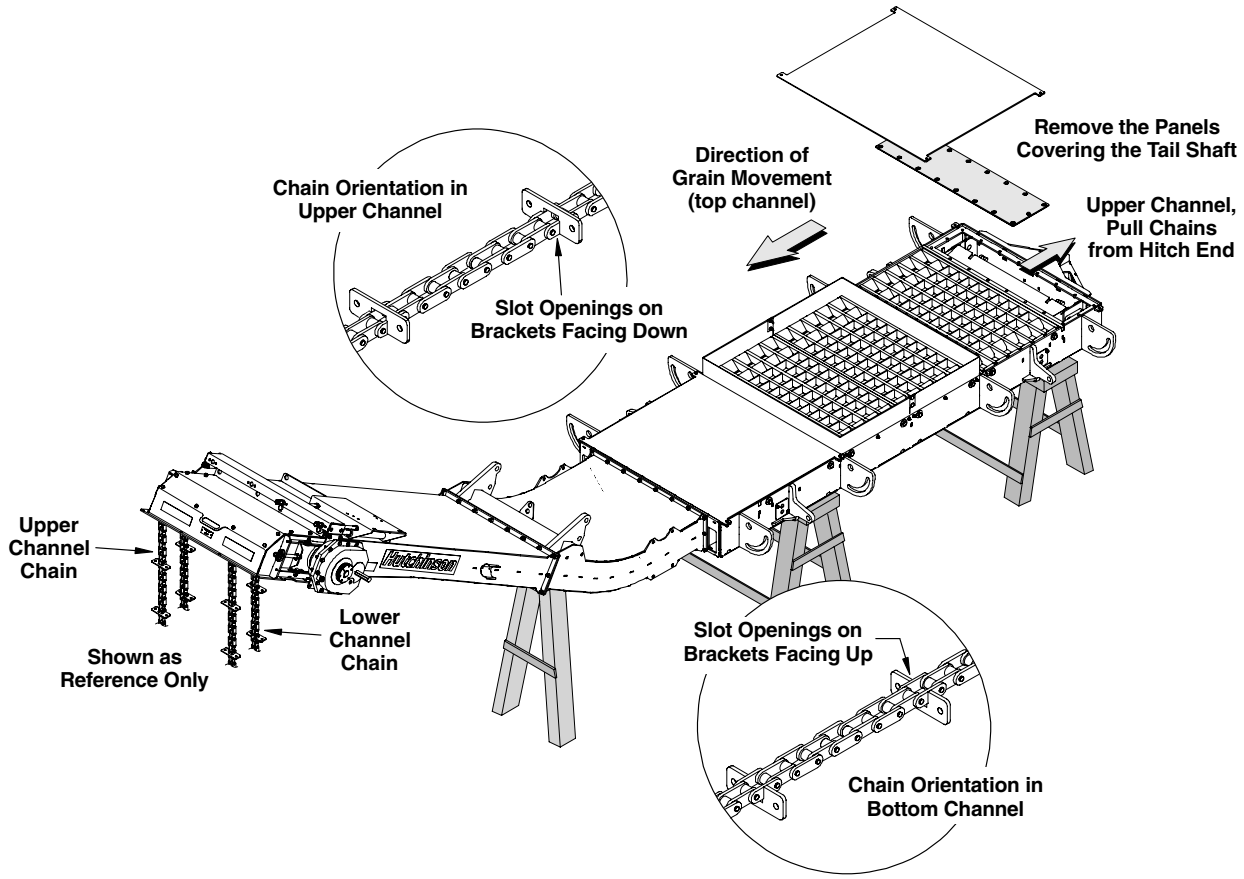

CHAIN & PADDLE ASSEMBLY (con't.)

4. Loosen all four carriage bolts on each side of the head (See illustration below). Slide the head shaft all the way towards the hitch end (it may be necessary to also loosen the adjustment bolt and jam nut in order to effectively slide the shaft back).
5. Position the chains over the head shaft sprockets and using the connecting links provided, connect the ends of the chains together. Take up about half the slack from the chains using the adjustment bolts. Tighten the jam nuts and secure the carriage bolts.
6. Install the backing plates and paddles. **Note: It is possible to install the backing plates and paddles onto the chain through the tail shaft cover panel, through the discharge end of the head, or through the main hopper area if a piece of grating is removed.** Use whichever method works best for your application.

   The backing plate goes against the mounting bracket on the chain and the paddles on the front side of the backing plates. All mounting hardware for the backing plates and paddles are 5/16" x 1 1/2" bolts, flat washers and nylon locknuts (flat washers against paddles). Rotate the gearbox shaft to advance the chains for back plate and paddle installation.

   Refer to the "Lubrication and Maintenance Section" for chain tension procedures.

   Note: The chain mounting brackets are positioned behind the paddles in the direction of grain movement (See illustration below).
7. After the chains have been properly installed and tensioned, re-install the cover plate over the tail shaft and the hopper cover previously removed.

IMPORTANT! Make sure both the left and right chains are on their respective lower sprockets and that they are in time with each other.

All Paddle Attaching Hardware Consists of 5/16 x 1 1/2" Bolts, Flat Washers & Nylon Locknuts (flat washers against paddles)

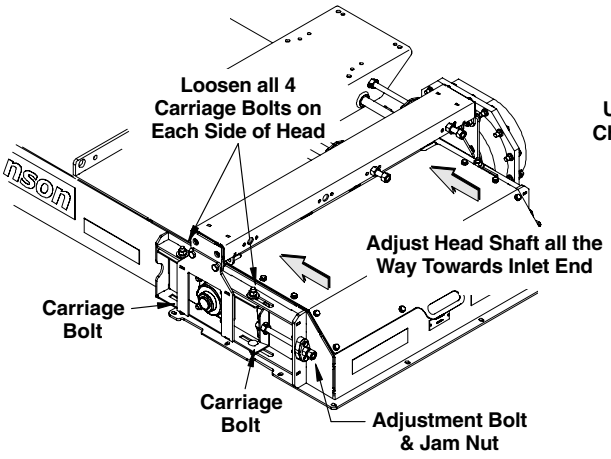

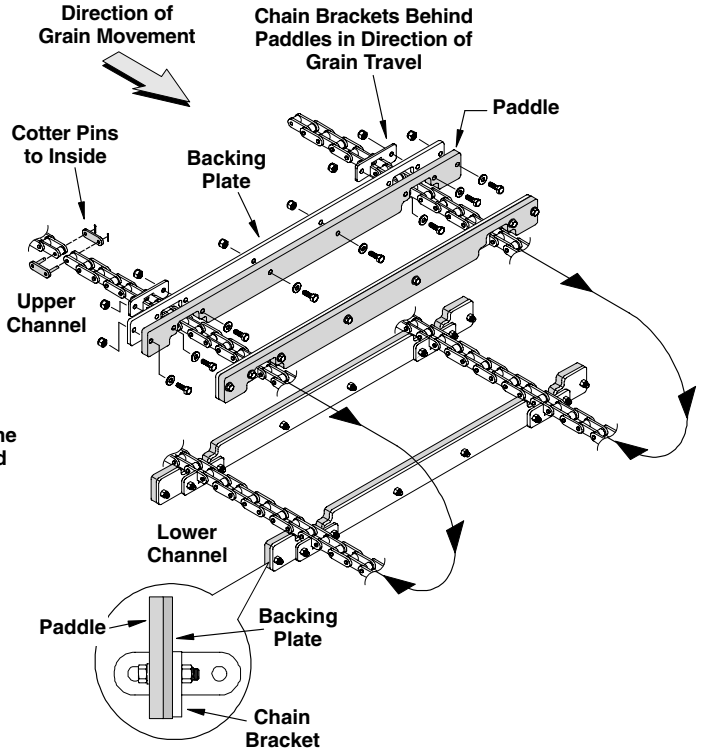

DRIVE-OVER CONVEYOR ASSEMBLY (con't.)

AXLE & AXLE CYLINDER ASSEMBLY

1. The axle mounts onto the horizontal section of the 30° corner. **Before installing the axle, grind smooth** any welds that will interfere with the mounting plate of the axle (See illustration below). Position the axle as shown, (notches on axle ears facing towards the discharge end).

   Secure the top two holes of each axle plate to the 30° corner using 5/8" x 1 1/2" bolts, lock washers and non-lock nuts. The bottom holes on the 30° corner have weldnuts already installed, secure the two bottom holes of each axle plate using 5/8" x 1 1/2" bolts and lock washers.

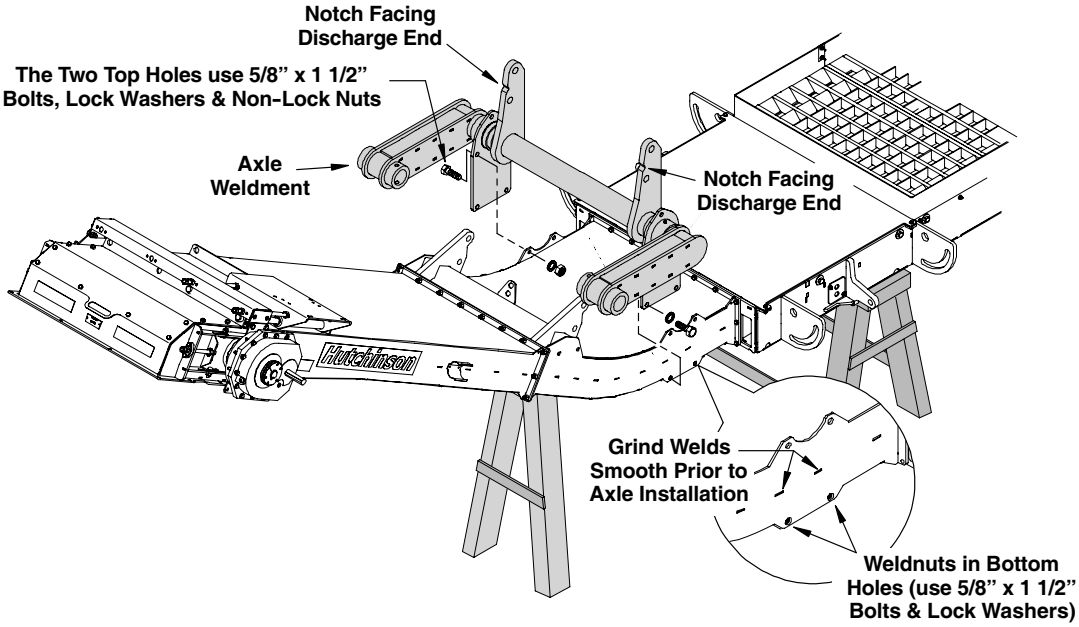

2. Assemble the hubs onto the spindles as shown in Fig. 7. Add axle grease into the hub cavity until hub is approximately 1/3 full. Pack the inner bearing with axle grease and install bearing into hub.

   Press a seal onto the hub. Pack the outer bearing with grease and install into the hub.

   Holding the outer bearing in place, carefully slide the hub assembly onto the spindle taking care not to damage the lip of the seal.

3. Install the flat washer and castle (slotted) nut onto the end of the spindle. Tightening the castle nut will seat the bearings into place.

   Tighten the nut until the hub begins to bind as it is being rotated. Back off the castle nut to the next slot and install and secure the cotter pin.

   Install the dust cap.

   An anti-seize compound will be applied to the spindle prior to installation in the axle weldment.

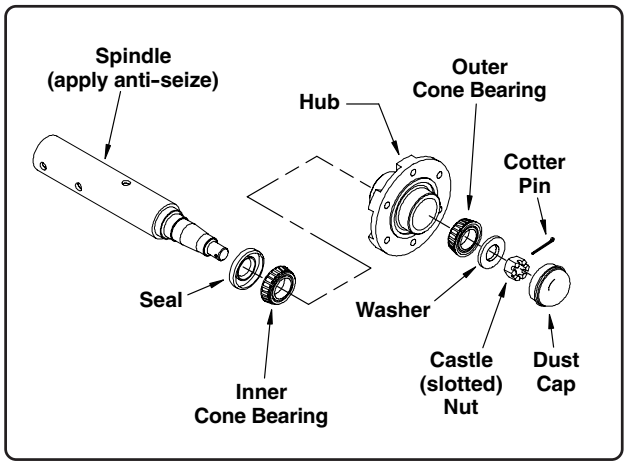

Fig. 7

AXLE & AXLE CYLINDER ASSEMBLY (con't.)

4. Apply anti-seize compound to the spindles and install spindle and hub assemblies to axle. Secure spindles using 1/2" x 4 1/2" bolts and nylon locknuts (See illustration below).
5. Attach the corner braces as shown below. One end of the brace will attach to the **inside** of the mount plate on the 30° corner incline using a 5/8" x 2" bolt and nylon locknut. The other end of the brace will attach to the **inside** of the axle mount plate with two 5/8" flat washers as spacers between the brace and the axle plate. Secure using a 5/8" x 2" bolt and nylon locknut (See illustration below).

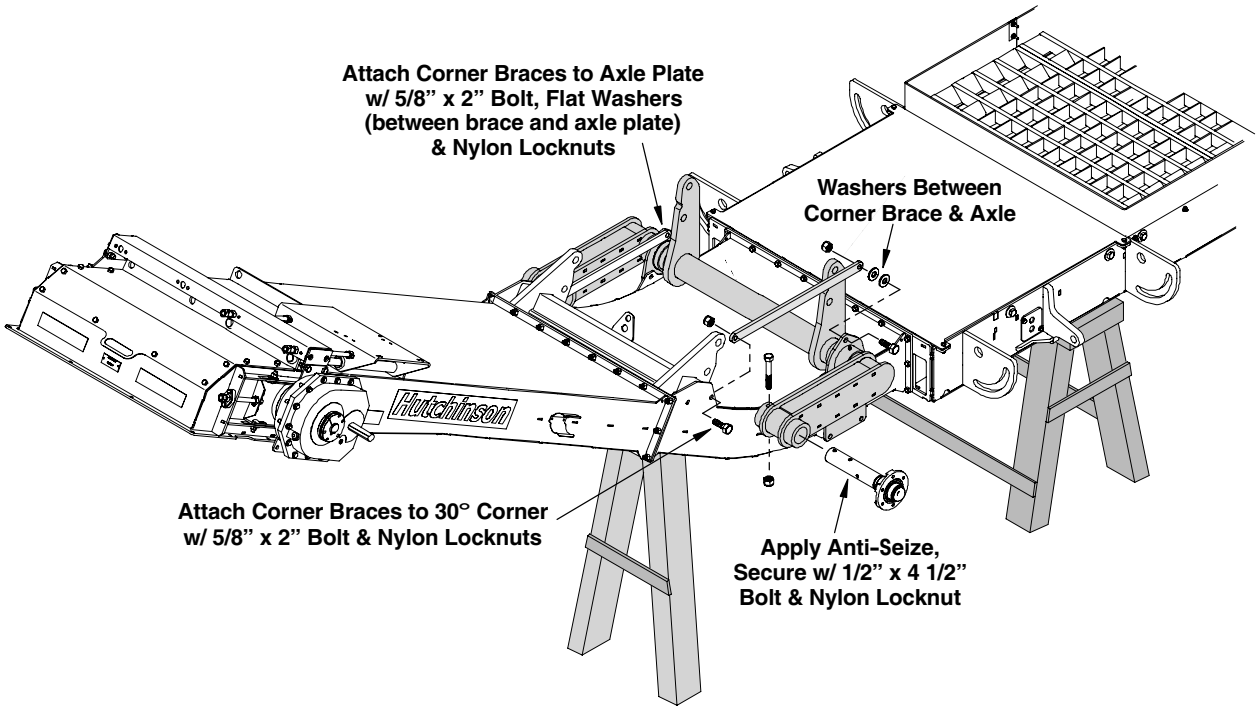

6. Install the axle hydraulic lift cylinders. The rigid end of the cylinders will attach to the lower hole on the mounting ear located on the 30° corner. The retractable end of the cylinder will attach to the lower hole on the mounting ear of the axle (See Fig. 8 on following page). **Note: cylinder ports need to be facing to the inside.**

   Secure the cylinders using the mounting pins provided.
7. Install the transport arms. Bolt the end of the transport arm with the round hole to the mounting ear on the 30° corner using one 1" x 3 1/2" bolt and nylon lock nut. Tighten only enough to still allow the transport arm to pivot (the arm will rotate up and attach to the top hole in the axle mounting ear during conveyor transport).

   On the opposite end of the transport arm (with slotted holes), insert and secure a locking pin. This pin will be used to secure the arm to the mounting ear on the axle during conveyor transport.
8. Lay the two 23' *(7.01 m)* long hoses side-by-side at the hitch end of the conveyor, female (swivel) fittings towards conveyor). Stagger the hoses a couple inches and tape the two hoses together, this will help when pushing the hoses through the conveyor frame (the ends of the hoses should be taped shut or plugged to prevent debris from entering the hoses).
9. Push the hoses through the opening on the right-hand side of the conveyor frame (See Fig. 9 on following page). **Note: It may be beneficial to remove the bulkhead fitting mount plates from each side of the conveyor to help guide the hoses into place.**

   Route the hoses **<u>under</u> the axle tube** as shown.

   The ends of these hoses will connect to bulkhead fittings after the axle cylinder hoses are routed.

AXLE & AXLE CYLINDER ASSEMBLY (con't.)

Install Axle Lift Cylinders & Transport Arms

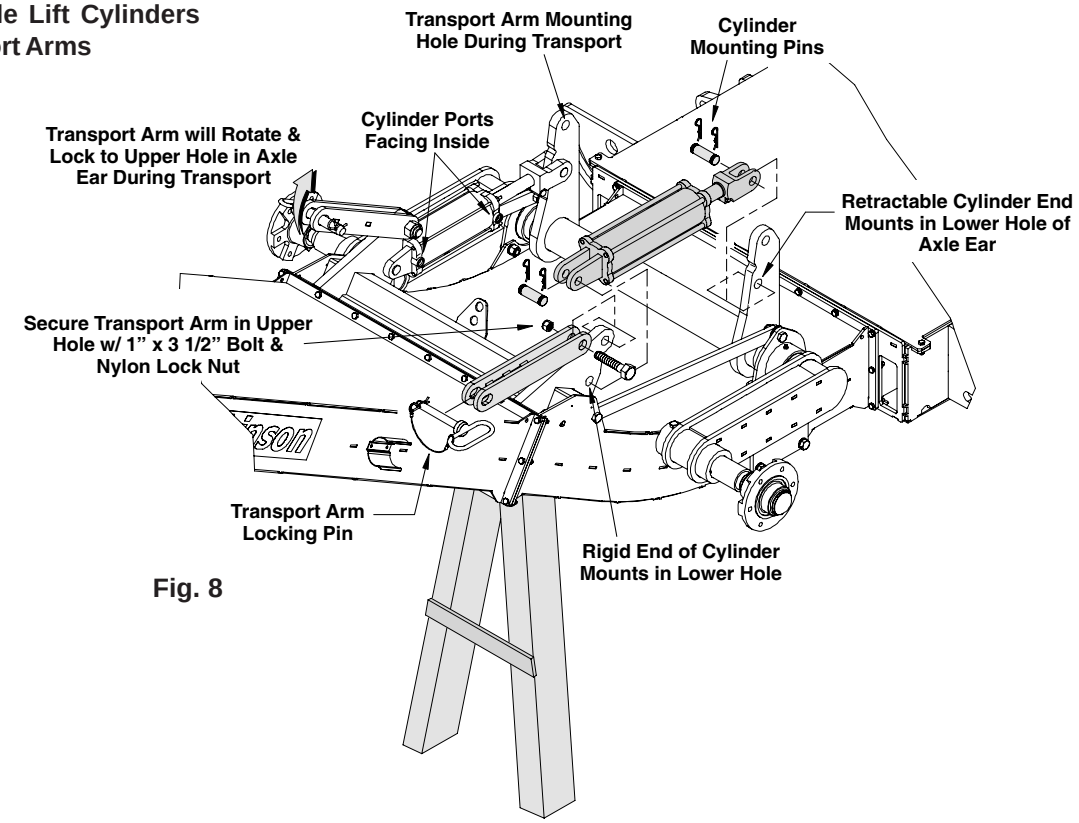

Fig. 8

Route Hydraulic Hoses for Axle Cylinders Through Conveyor Frame

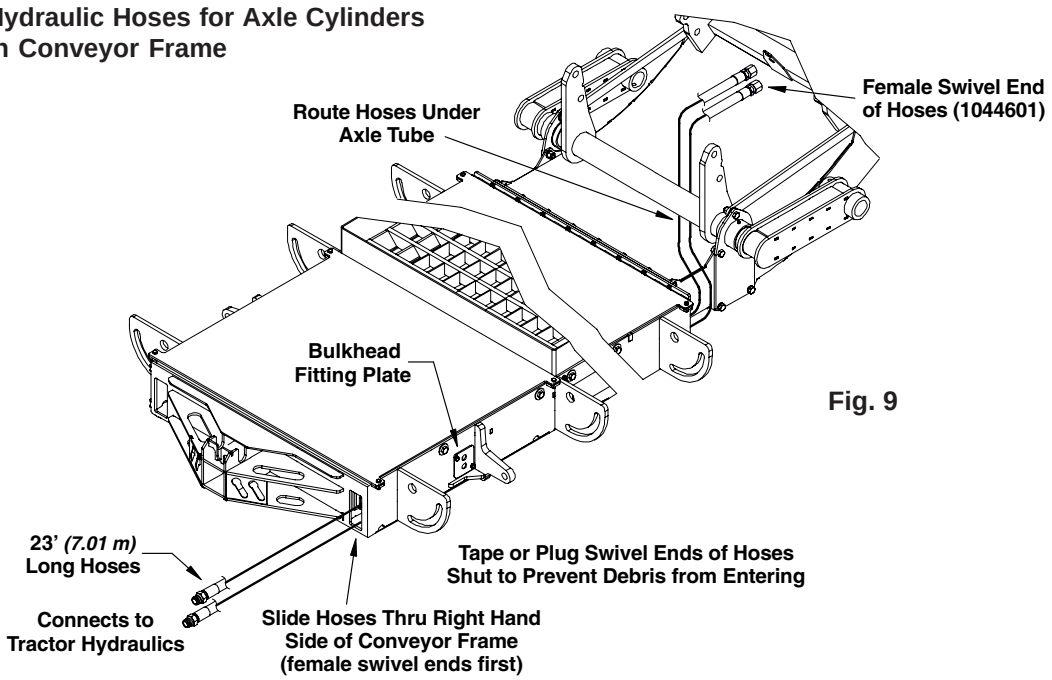

Fig. 9

AXLE & AXLE CYLINDER ASSEMBLY (con't.)

The instructions below show a number in parenthesis ( ), this number refers to the item shown in the assembly illustration below and on the following page.

10. Route hoses for axle lift cylinder. Clamp a tee (Ref. 4) in a vise. Apply teflon tape to the rigid nut end of a bulkhead fitting (Ref. 2) and thread into the single side of the tee. Apply teflon tape to the non-swivel ends of the two 2'-2" *(66.0 cm)* long hoses (Ref. 5) and install these into each end of the tee (See illustration below and on following page). Tighten securely.

    Repeat these procedures with another tee (Ref. 4) using two 1'-6" *(45.7 cm)* long hoses (Ref. 6).

11. Install the bulkhead fitting on the tee with the 1'-6" hoses, into the bottom hole of the mount plate centered behind the axle (bulkhead fitting faces the hitch end). Thread the nut (Ref. 3) onto the bulkhead fitting and tighten securely (it may necessary to remove the bulkhead nut prior to installation).

12. Thread a 90° o-ring fitting (Ref. 7) into the rear port of each lift cylinder (fitting is at proper depth into cylinder when the locking nut just covers the threads when it is secured). Rotate the fitting upward approximately 30° and tighten into place.

13. Apply teflon tape to the male swivel ends of the two hoses and secure to their respective cylinder.

    Repeat these procedures for the tee (Ref. 4) with the 2'-2" hoses (Ref. 6), inserting the bulkhead fitting into the top hole of the mounting plate and connecting hoses to the elbows on the front cylinder ports.

14. Install and secure the female end of the hose (Ref. 8) coming through the conveyor frame to the bottom bulkhead fitting in the mount plate. Secure the other hose to the top bulkhead fitting.

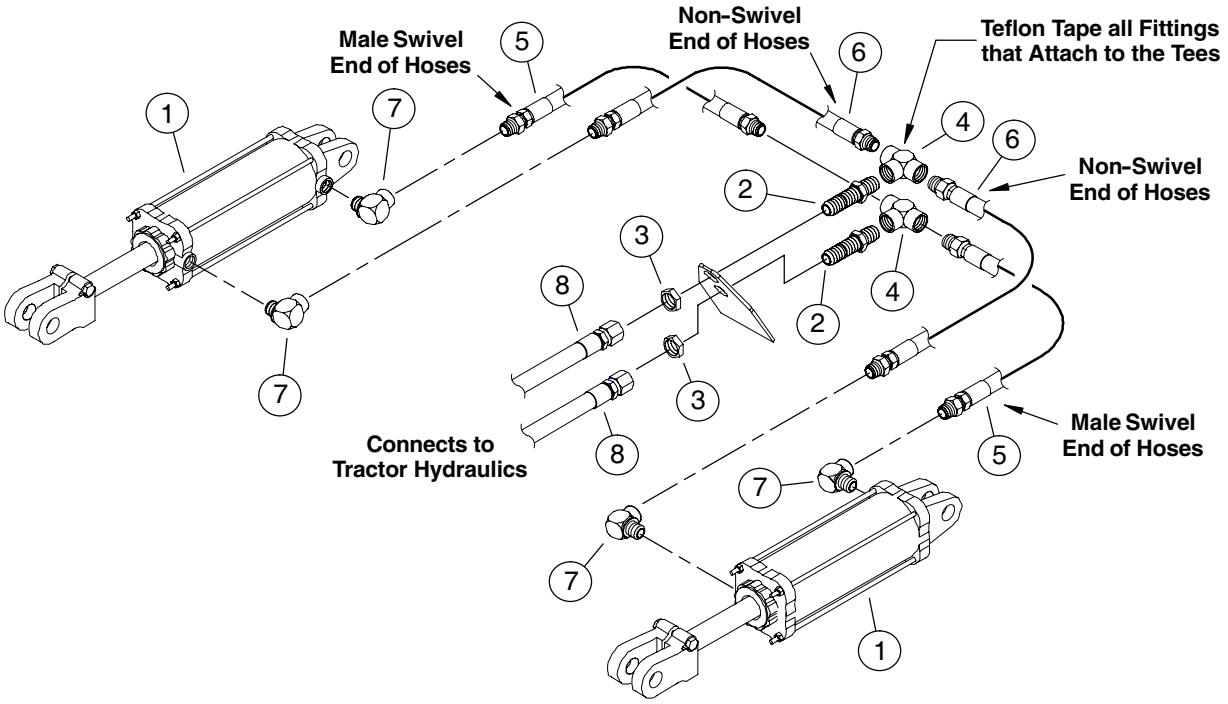

AXLE & AXLE CYLINDER ASSEMBLY (con't.)

1 1030723 Hydraulic Lift Cylinder 3" Br x 8" Stroke
2 1041284 Hydr. Bulkhead Fitting 1/2" NPT
3 1041348 Lock Nut f/ Bulkhead Fitting
4 1040071 Hydraulic Tee, 1/2" FM NPT
5 1044602 Hydraulic Hose, 1'-6" long 1/2" M-NPT-S x 1/2" M-NPT-NS
6 1044610 Hydraulic Hose, 2'-2" long 1/2" M-NPT-S x 1/2" M-NPT-NS
7 1040072 Hydraulic Elbow, SAE 8, M–F
8 1044601 Hydraulic Hose, 23'-0" long 1/2" NPT-M-NS x 1/2" NPT-F-S

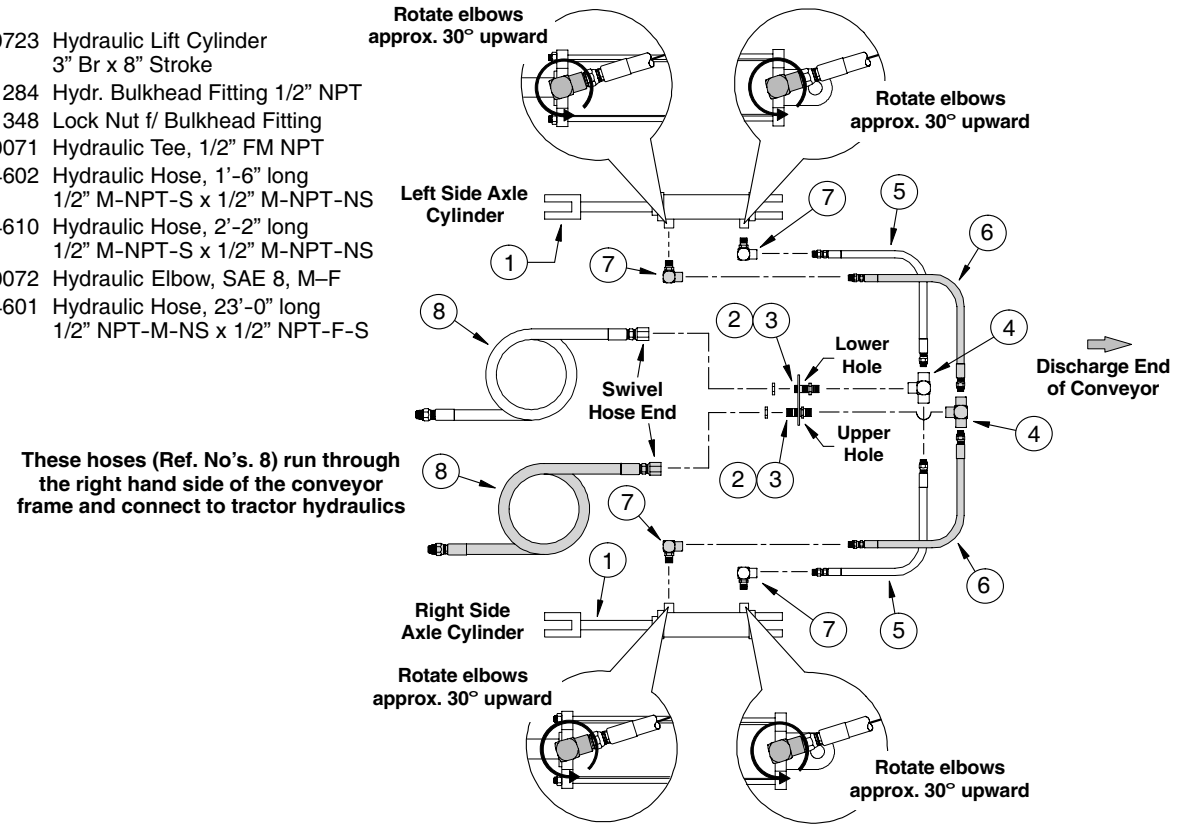

ROUTE RAMP HOSES

1. Clamp a tee fitting into a vise. Apply teflon tape to the threads on the rigid nut end of a bulkhead fitting and tighten the bulkhead fitting securely into the single side of the tee (See Fig. 10).
2. Apply teflon tape to the end of a 3'-6" *(1.07 m)* long hose (Part No. 1044606). Secure the hose into one side of the tee fitting.

   Apply teflon tape to the male swivel end of a 6'-10" *(2.08 m)* long hose (Part No. 1044607) and secure the hose on the other side of the tee fitting.

   At each end of the hose assembly, label the hose assembly "Top" hose.
3. Repeat the procedures in Step 2 for three more tee fittings using the same hoses. When assembled, label one more hose assembly "Top" and the two remaining hose assemblies "Bottom."

   You should have a total of two identical assemblies labeled "Top" and two assemblies labeled "Bottom" that are identical to the top assemblies.

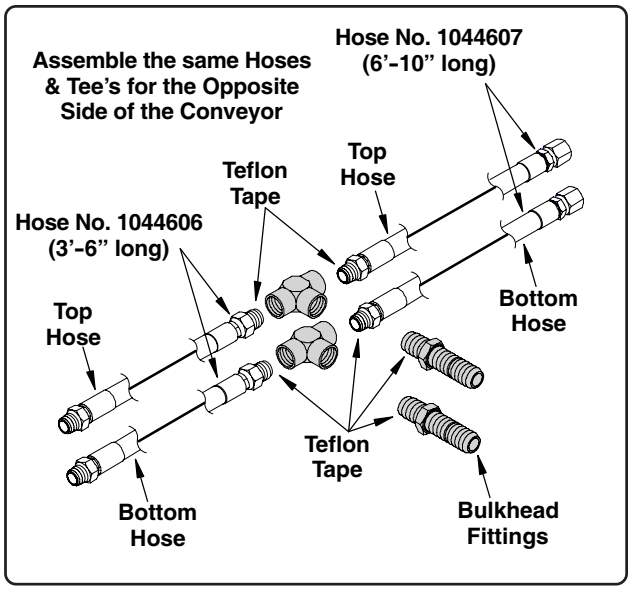

Fig. 10

ROUTE RAMP HOSES (con't.)

4. Remove the four bulkhead plates from the sides of the frame (two plates on each side), retain mounting hardware. Tape the female ends of the hose assemblies shut to prevent debris from entering hoses as they are inserted through the frame. Feed the hose assemblies through the frame until the tees are accessible through the rear bulkhead opening (See illustration below).
5. Clamp four 90° elbow fittings (1/2" NPT) into a vise. Apply teflon tape to the rigid nut end of the bulkhead fittings and securely tighten the fittings into the elbows.
6. At the front bulkhead opening, fasten an elbow to each of the female ends of the hose (**do not** use teflon tape).

   Maintain the "Top" & "Bottom" positioning of the hoses while inserting the bulkhead fittings through the bulkhead plates. Thread the locking nuts onto the bulkhead fittings finger tight, then tighten the plates into position using the hardware previously retained. Tighten the bulkhead locking nuts securing bulkhead fittings to plates.
7. Insert the bulkhead fittings on the tee's through the bulkhead plates maintaining "Top" & "Bottom" hose positioning. Thread the locking nuts onto the bulkhead fittings finger tight and tighten plates into position using the hardware previously retained. Tighten bulkhead locking nuts securing bulkhead fittings into place.
8. Install the eight ramp hoses to the ends of the bulkhead fittings protruding from the sides of the frame. Secure the female ends of the hoses to the fittings, **do not** use teflon tape. When installing these eight hoses, keep the "Top" & "Bottom" labeling method maintained.

   Hose lengths will vary depending on the ramps being used:

   No Ramp Extensions - Hose 1044638, 1'-10" *(55.9 cm)* long
   Short Ramp Extension - Hose 1044634, 4'-6" *(1.37 m)* long
   Long Folding Ramps - Hose 1044608, 3'-0" *(91.4 cm)* long

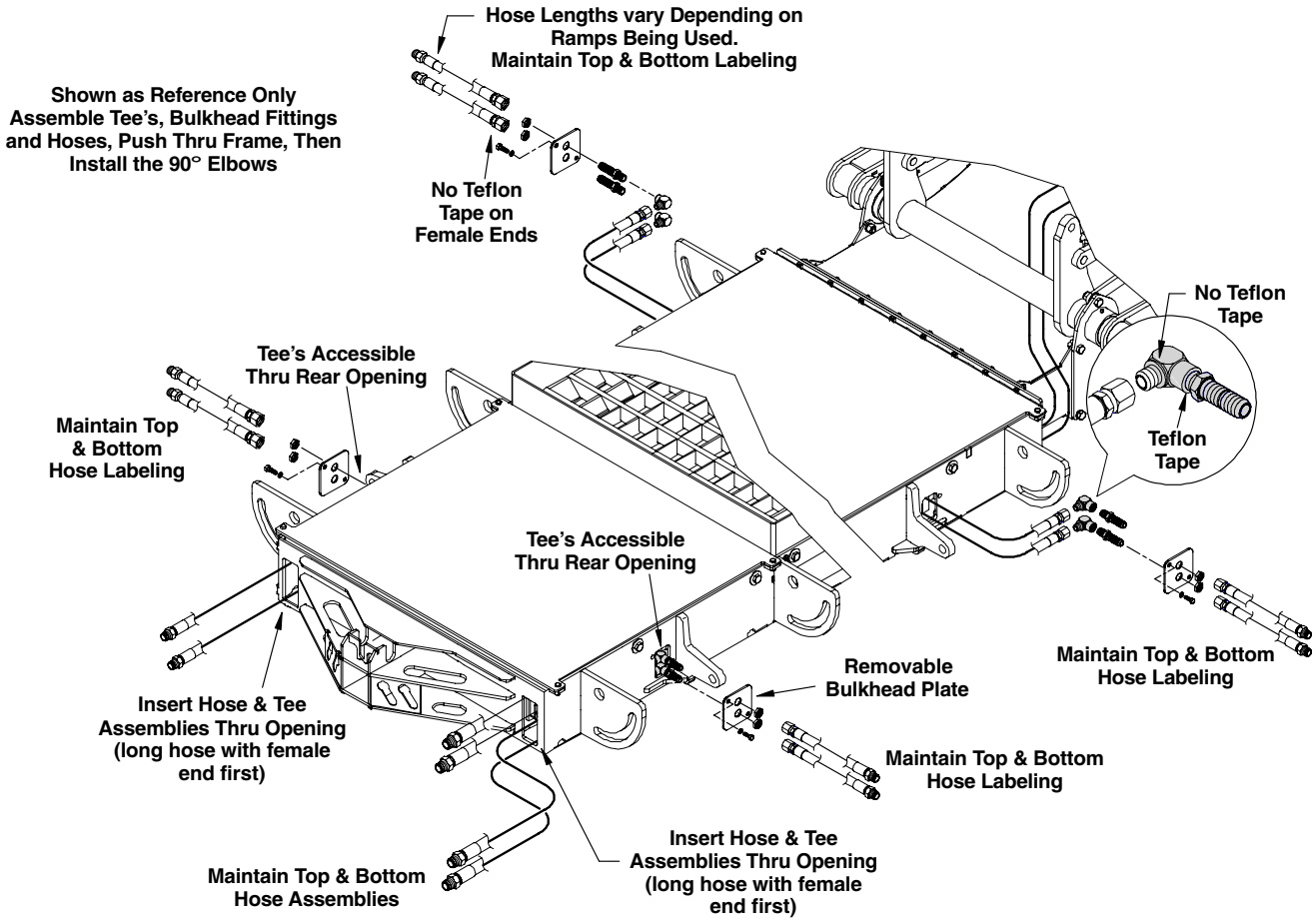

ROUTE RAMP HOSES (con't.)

9. Route the hose ends up through the slots at the hitch end of the unit (See Fig. 11). Left side hoses through slots on left side, right side hoses through slots on right side (also route the hoses from the axle cylinders up through the slots on the right hand side of the unit at this time).
10. Apply teflon tape to the rigid nut end of the final two bulkhead fittings and install into the two remaining tee fittings. Thread a locking nut onto each bulkhead fitting leaving a 3/8" *(10 mm)* gap between the locking and rigid nut (these fittings will slide down into the slot at the very front of the unit where the hitch slides in, See Fig. 11).
11. Apply teflon tape to the ends of the hoses (identified as "Bottom") and install these into the tee fitting. Slide the bulkhead fitting into the slot with nuts on each side of slot and tighten into place.

    Attach a 6'-10" *(2.08 m)* hose (Part No. 1044607) onto the end of the bulkhead fitting.
12. Repeat these same procedures with the hoses labeled "Top" and ensure all fittings are tight.

    See diagram below for ramp hose and fitting identification.

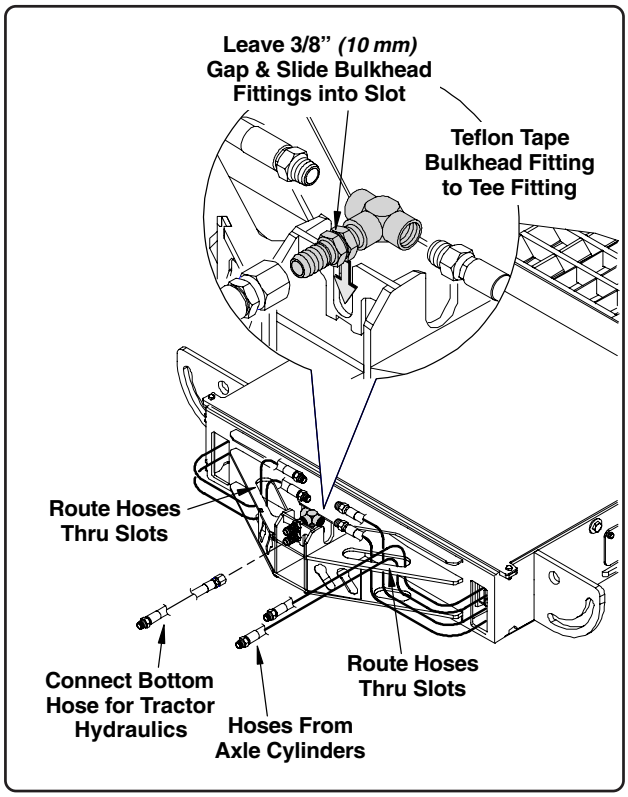

Fig. 11

1	1044607	Hydraulic Hose, 6'-10" long 1/2" NPT-F-S x 1/2" NPT-M-S
2	1044606	Hydraulic Hose, 3'-6" long 1/2" NPT-M-S x 1/2" NPT-M-S
3	106413	Hydraulic 90° Elbow, 1/2" NPT–M x 1/2" NPT–F
4	1040071	Hydraulic Tee, 1/2" NPT–F
5	1044425	Bulkhead Plate, Removable

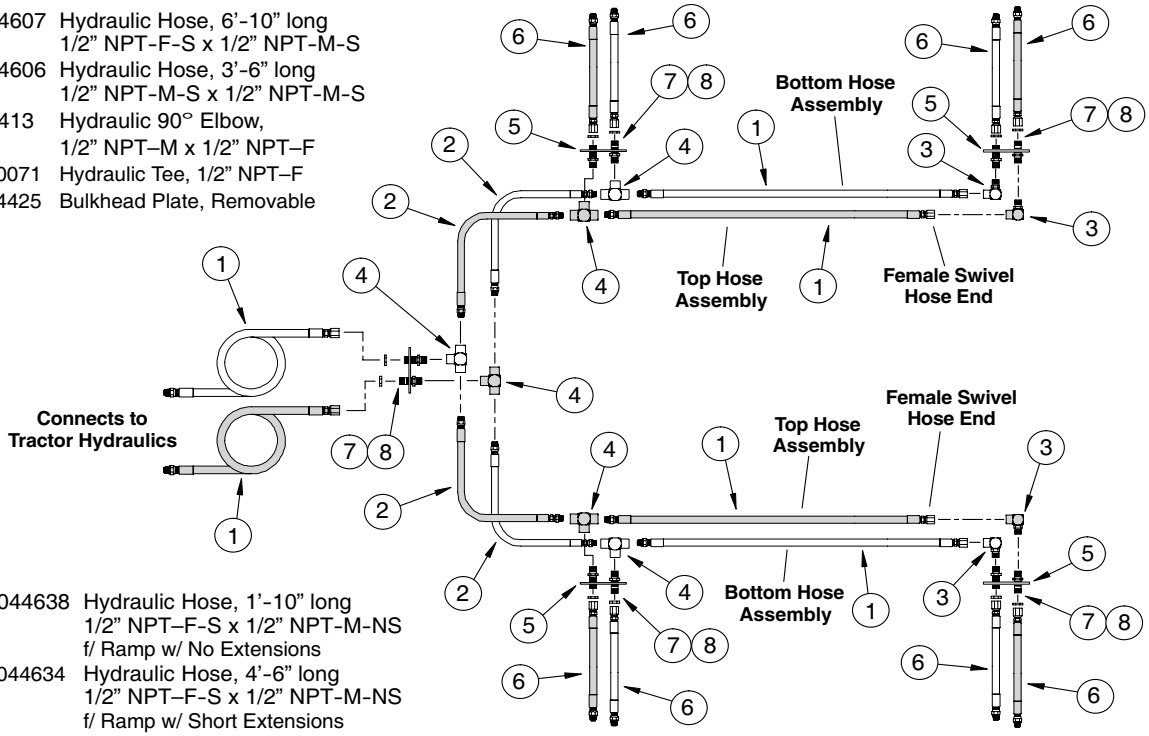

6	1044638	Hydraulic Hose, 1'-10" long 1/2" NPT–F-S x 1/2" NPT-M-NS f/ Ramp w/ No Extensions
(6)	1044634	Hydraulic Hose, 4'-6" long 1/2" NPT–F-S x 1/2" NPT-M-NS f/ Ramp w/ Short Extensions
(6)	1044608	Hydraulic Hose, 3'-0" long 1/2" NPT–F-S x 1/2" NPT-M-NS f/ Long Folding Ramps
7	1041284	Hydr. Bulkhead Fitting, 1/2" NPT
8	1041348	Locknut f/ Bulkhead Fitting

Hydraulic Hoses (Item No. 6) Vary in Length Depending on Ramps being Used

INSTALL RAMPS & EXTENSIONS (No Extensions & Short Extensions)

1. Carefully pick up one end of the hopper at a time, remove supports from beneath conveyor and lower conveyor to the ground.
2. Locate the four ramp lift cylinders (Part No. 1041669). Clamp a cylinder into a vise and remove the two plugs from the cylinder ports. Also, ensure the single plug on the side of the stationary end of the cylinder is tight and secure (See Fig. 12).

   Note: When installed, the cylinders for the front ramps will have the ports facing the rear (hitch end) of the conveyor, the cylinders for the rear ramps will have the ports facing the front (discharge end) of the conveyor.

   When referencing the left, right, front and rear of the unit, it is always determined by standing at the hitch end of the conveyor and looking towards the discharge end (See Fig. 12A).

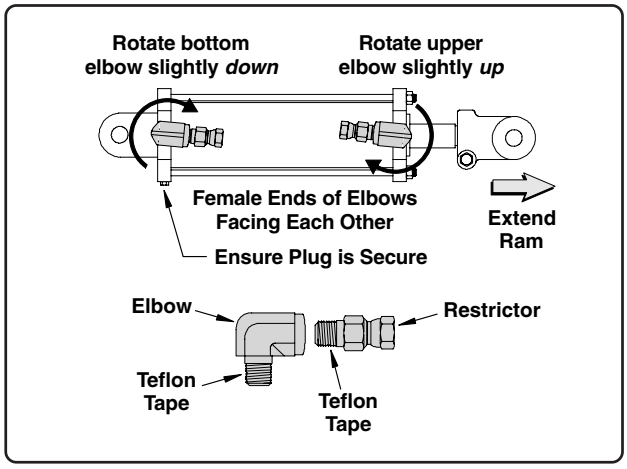

Fig. 12

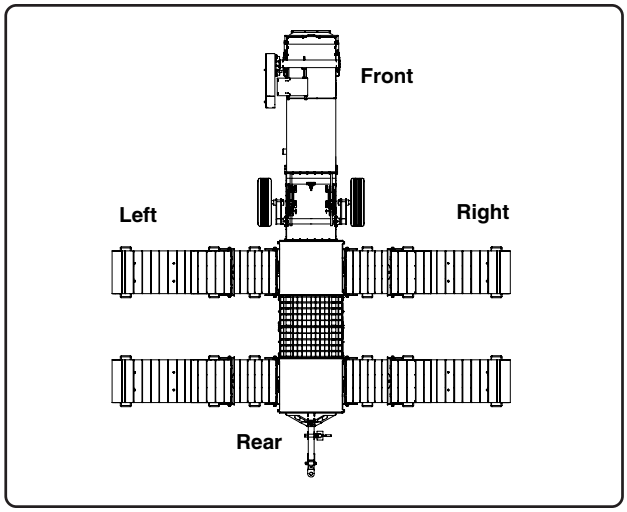

Fig. 12A

3. Apply teflon tape to the male ends of the 90° elbows. Install the elbows into the cylinders so that when tight, the female ends of the elbows face each other and are at a slight angle to allow the hoses to be parallel with each other (See Fig. 12).

   The elbow on the stationary end should angle slightly down, and the elbow on the ram end of the cylinders should angle slightly up, yet keeping hose alignment parallel (See Fig. 12).
4. Apply teflon tape to the ends of the swivel restrictors and install them into the elbows.

   While the cylinders are still in the vise, pull the ram outward to extend it.

FRONT RAMP INSTALLATION w/ NO EXTENSIONS

The following instructions are for ramp installation using no extensions.

1. Position a ramp near the front end of the hopper assembly as shown on the following page.

   Check that the 1 1/2" dia. *(38 mm dia.)* x 34 1/2" *(87.6 cm)* long extension pin slides freely through the upper hole of the ramp (grind smooth any abnormalities to ensure the pin slides through).
2. Hoist the ramp up vertically from the tapered end and attach it to the hopper using the 34 1/2" long extension pin, secure the pin using the lynch pins provided. Leave the hoist connected to ramp as additional support until ramp assembly is complete.
3. Insert a 1" flat washer between the ramp and the mount plate and install a short pin weldment with the welded washer end to the outside (See illustration on following page). Secure the short pin with a 1/4" x 2" cotter pin. Repeat on the opposite side of the ramp.
4. Install a lift cylinder onto the ramp, 90° elbows will face towards the rear (hitch end), lower elbow on stationary end will be angled down. The stationary end attaches to the mounting ear of the hopper, the ram end attaches to the mounting ear on the bottom side of the ramp (See illustration on following page).

   Use the cylinder pin and hair pin clips to attach the ram end to the mounting ear on the ramp, **use the cylinder pin and the supplied 5/32" x 1 1/4" cotter pins to secure the stationary end to the mounting ear on the hopper (do not use the hair pin clips on the stationary end).**

FRONT RAMP INSTALLATION
w/ NO EXTENSIONS (con't.)

5. Route the hose on the top side of the cylinder making sure to connect the hose labeled "Top" to the upper elbow (ram end). Route the other hose labeled "Bottom" to the lower elbow (stationary end). Tighten securely **(do not use teflon tape for these connections).**
6. Manually (and with assistance from the hoist), lower the ramp to the ground. Repeat these procedures for ramp installation on the opposite front side of the hopper.

Front Ramp Installation
(No Extensions)

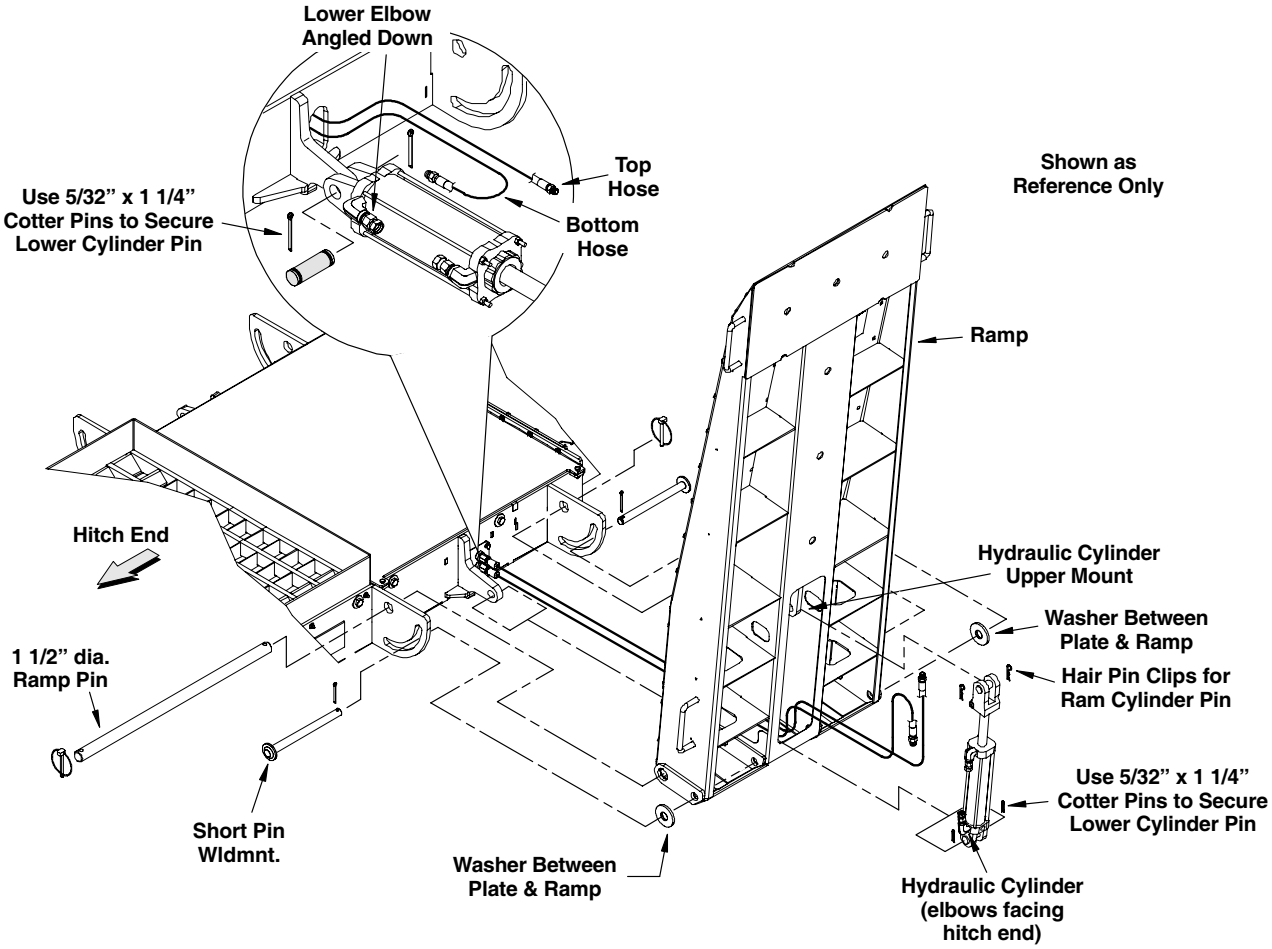

INSTALL RAMPS & EXTENSIONS (con't.)

REAR RAMP INSTALLATION w/ NO EXTENSIONS

1. Position a ramp near the ramp mounting ears at the rear of the hopper as shown in the illustration on the following page.

   Check that the 1 1/2" dia. *(38 mm dia.)* x 34 1/2" *(87.6 cm)* long extension pin slides freely through the upper hole of the ramp (grind smooth any abnormalities to ensure the pin slides through).
2. Hoist the ramp up vertically from the tapered end and attach it to the hopper using the 34 1/2" long extension pin, secure the pin using the lynch pins provided. Leave the hoist connected to ramp as additional support until ramp assembly is complete.
3. Insert a 1" flat washer between the ramp and the mount plate and install a short pin weldment with the welded washer end to the outside (as shown in the illustration on the following page). Secure the short pin using a 1/4" x 2" cotter pin. Repeat on the opposite side of the ramp.
4. Install a lift cylinder onto the ramp, 90° elbows will face towards the front (discharge end), lower elbow on the stationary end will be angled up.

   The stationary end attaches to the mounting ear of the hopper, the ram end attaches to the mounting ear on the bottom side of the ramp (See illustration on following page).

   Use the cylinder pin and hair pin clips to attach the ram end to the mounting ear on the ramp, **use the cylinder pin and the supplied 5/32" x 1 1/4" cotter pins to secure the stationary end to the mounting ear on the hopper (do not use the hair pin clips on the stationary end).**
5. Route the hose on the top side of the cylinder making sure to connect the hose labeled "Top" to the upper elbow (ram end). Route the other hose labeled "Bottom" to the lower elbow (stationary end). Tighten securely **(do not use teflon tape for these connections).**
6. Manually (and with assistance from the hoist), lower the ramp to the ground. Repeat these procedures for ramp installation on the opposite rear side of the conveyor hopper.

Continue with the instructions "Electric Drive Assembly" on Page 42.

REAR RAMP INSTALLATION
w/ NO EXTENSIONS (con't.)

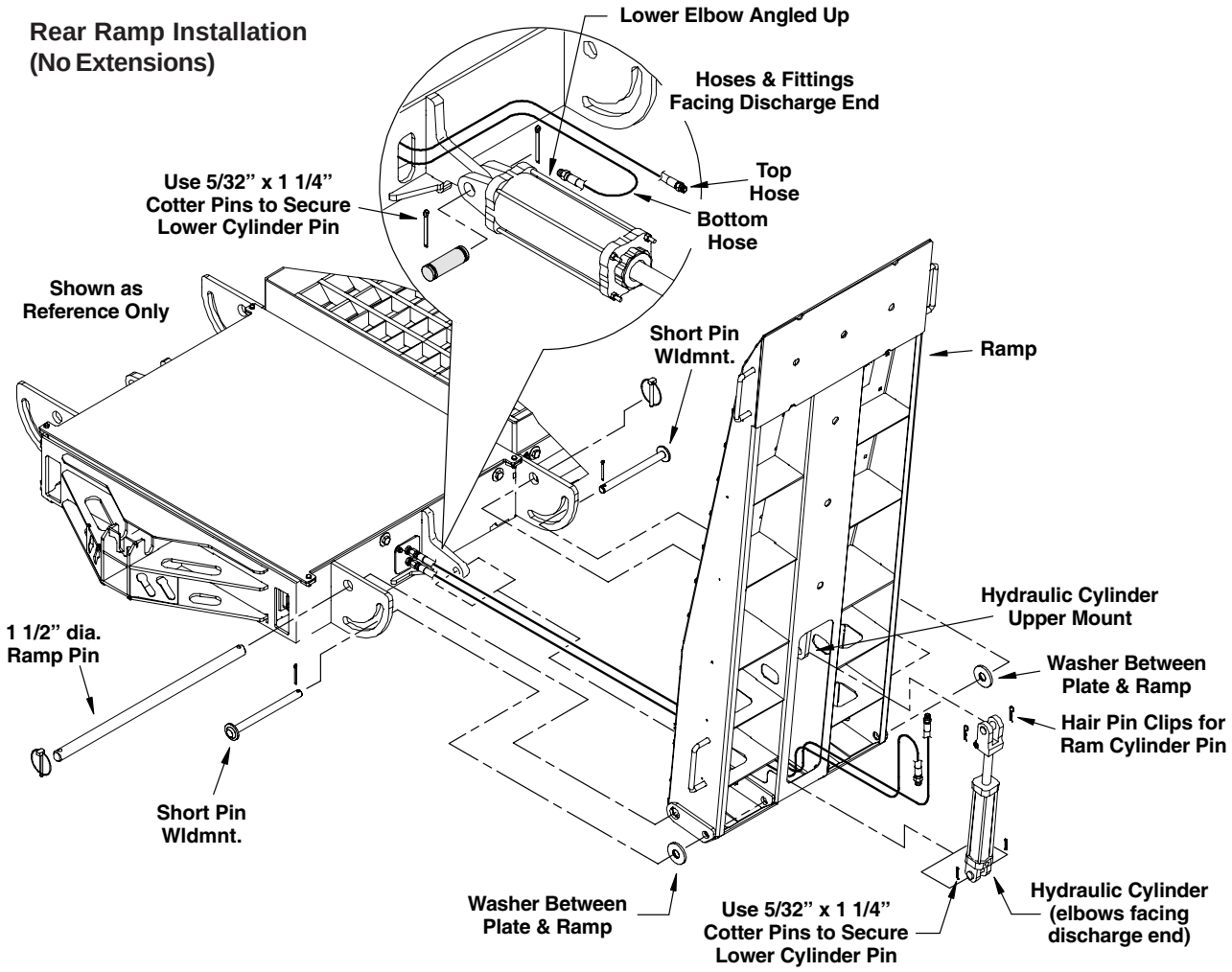

FRONT RAMP INSTALLATION w/ SHORT EXTENSIONS

The following instructions are for ramp installation using the short extension application.

1. Position an extension at the front (discharge end) of the hopper as shown in the illustration on the following page.

   Verify the 1 1/2" dia. *(38 mm)* x 34 1/2" *(87.6 cm)* long extension pin freely slides through the upper hole of the extension (if necessary, grind smooth any abnormalities to ensure the pin slides through).

2. Hoist the extension into position and attach it to the hopper assembly with the extension pin, secure the pin using the lynch pins provided.

3. Pivot the extension up so it is vertical. Insert a 1" flat washer between the extension and the rigid mount plate of the hopper and install a short pin weldment with the welded washer end to the outside (See illustration on following page). Secure the short pin with a 1/4" x 2" cotter pin. Repeat on the opposite side of the extension.

4. With the extension still in the vertical position, feed the two hoses from the tee side bulkhead fittings through the front opening (discharge end) of the extension (See illustration on following page). Lower the extension to rest flat on the ground.

   Repeat these procedures for the extension on the opposite front side of the hopper.

5. Position a ramp near the extension and check that the 1 1/2' dia. *(38 mm)* x 34 1/2" *(87.6 cm)* long extension pin slides freely through the upper hole of the ramp (grind smooth any abnormalities to ensure pin slides through).

6. Hoist the ramp up vertically from the tapered end and attach it to the end of the extension using the 34 1/2" *(87.6 cm)* long extension pin, secure pin using the lynch pins provided. Leave the hoist connected to ramp as additional support until ramp assembly is complete.

7. Insert a 1" flat washer between the ramp and the mount plate of the extension and install a short pin weldment with the welded washer end to the outside (See illustration below). Secure the short pin with a 1/4" x 2" cotter pin. Repeat on the opposite side of the ramp.

8. Install a lift cylinder onto the ramp, 90° elbows will face towards the rear (hitch end), lower elbow on stationary end will be angled down. The stationary end attaches to the mounting ear of the extension, the ram end attaches to the mounting ear on bottom side of the ramp (See illustration on following page).

   Use the cylinder pin and hair pin clips to attach the ram end to the mounting ear on bottom of ramp, **use the cylinder pin and the supplied 5/32" x 1 1/4" cotter pins to secure the stationary end to the extension mounting ear (do not use the hair pin clips on the stationary end).**

9. Route the hose on the top side of the cylinder making sure to connect the hose labeled "Top" to the upper elbow (ram end) and the hose labeled "Bottom" to the lower elbow (stationary end). Tighten securely (do not use teflon tape for these connections).

10. Manually (and with assistance from the hoist), lower the ramp to the ground. Repeat these procedures for ramp installation on the opposite front side of the hopper.

FRONT RAMP INSTALLATION
w/ SHORT EXTENSIONS (con't.)

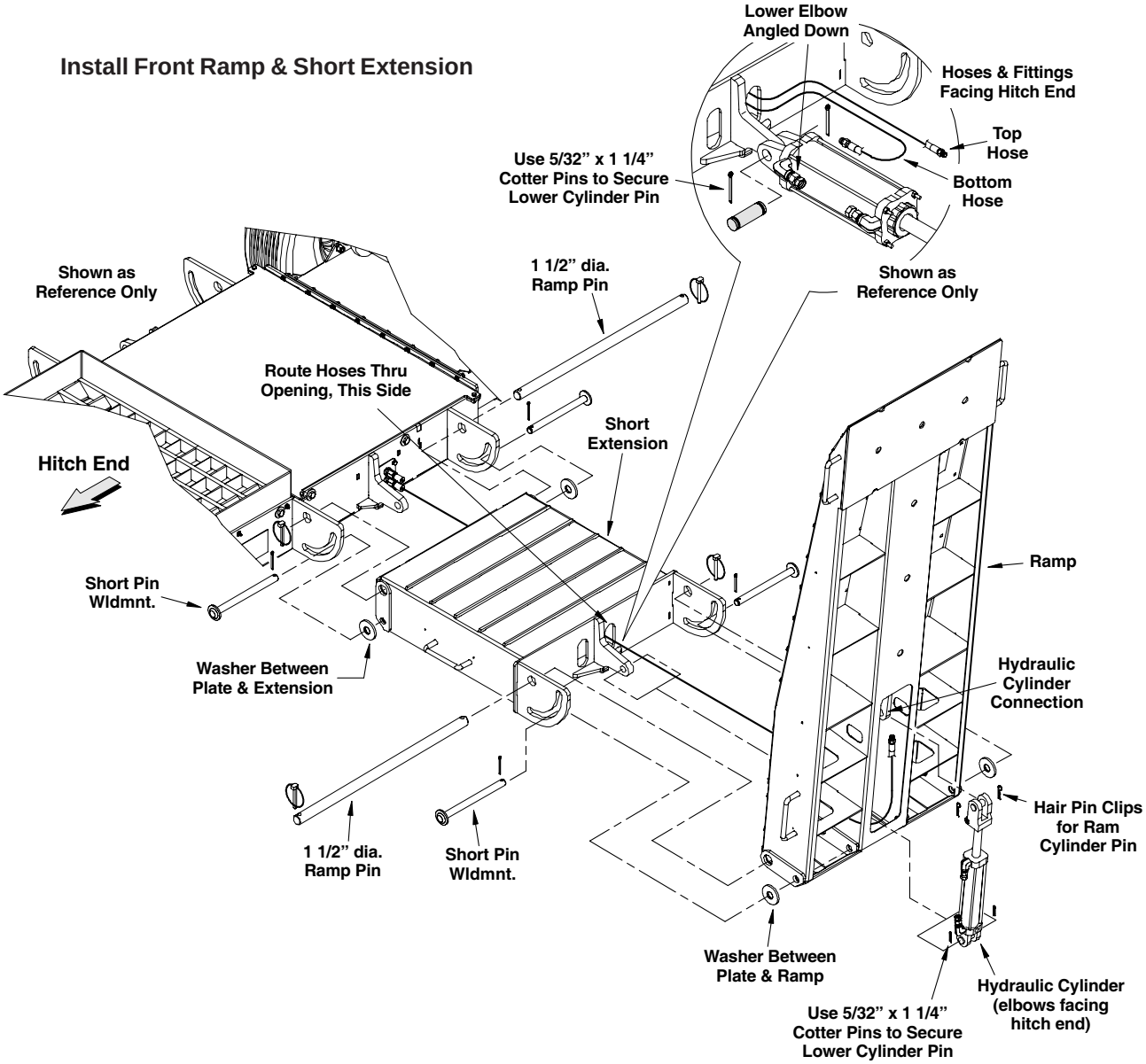

REAR RAMP INSTALLATION w/ SHORT EXTENSION

1. Position an extension at the rear (hitch end) of the hopper as shown in the illustration on the following page. Verify the 1 1/2" dia. *(38 mm)* x 34 1/2" *(87.6 cm)* long extension pin freely slides through the upper hole of the extension (if necessary, grind smooth any abnormalities to ensure the pin slides through).
2. Hoist the extension into position and attach it to the hopper assembly with the extension pin, secure the pin using the lynch pins provided.
3. Pivot the extension up so it is vertical. Insert a 1" flat washer between the extension and the rigid mount plate of the hopper and install a short pin weldment with the welded washer end to the outside (See illustration on following page). Secure the short pin with a 1/4" x 2" cotter pin. Repeat on the opposite side of the extension.
4. With the extension still in the vertical position, feed the two hoses from the tee side bulkhead fittings through the rear (hitch end) opening of the extension (See illustration on following page). Lower extension to rest flat on the ground.

   Repeat these procedures for the extension on the opposite front side of the hopper.
5. Position a ramp near the extension and check that the 1 1/2" dia. *(38 mm)* x 34 1/2" *(87.6 cm)* long extension pin slides freely through the upper hole of the ramp (grind smooth any abnormalities to ensure pin slides through).
6. Hoist the ramp up vertically from the tapered end and attach it to the end of the extension using the 34 1/2" *(87.6 cm)* long extension pin, secure pin using the lynch pins provided. Leave the hoist connected to ramp as additional support until ramp assembly is complete.
7. Insert a 1" flat washer between the ramp and the mount plate of the extension and install a short pin weldment with the welded washer end to the outside (See illustration on following page). Secure the short pin with a 1/4" x 2" cotter pin. Repeat on the opposite side of the ramp.
8. Install a lift cylinder onto the ramp, 90° elbows will face towards the front (discharge end), lower elbow on stationary end will be angled up. The stationary end attaches to the mounting ear of the extension, the ram end attaches to the mounting ear on bottom side of the ramp (See illustration on following page).

   Use the cylinder pin and hair pin clips to attach the ram end to mounting ear on bottom of ramp, **use the cylinder pin and supplied 5/32" x 1 1/4" cotter pins to secure the stationary end to the extension mounting ear (do not use the hair pin clips on the stationary end).**
9. Route the hose on the top side of the cylinder making sure to connect the hose labeled "Top" to the upper elbow (ram end) and the hose labeled "Bottom" to the lower elbow (stationary end). Tighten securely (do not use teflon tape for these connections).
10. Manually (and with assistance from the hoist), lower the ramp to the ground.

    Repeat these procedures for the ramp installation on the opposite rear side (hitch end) of the hopper.

REAR RAMP INSTALLATION
w/ SHORT EXTENSION (con't.)

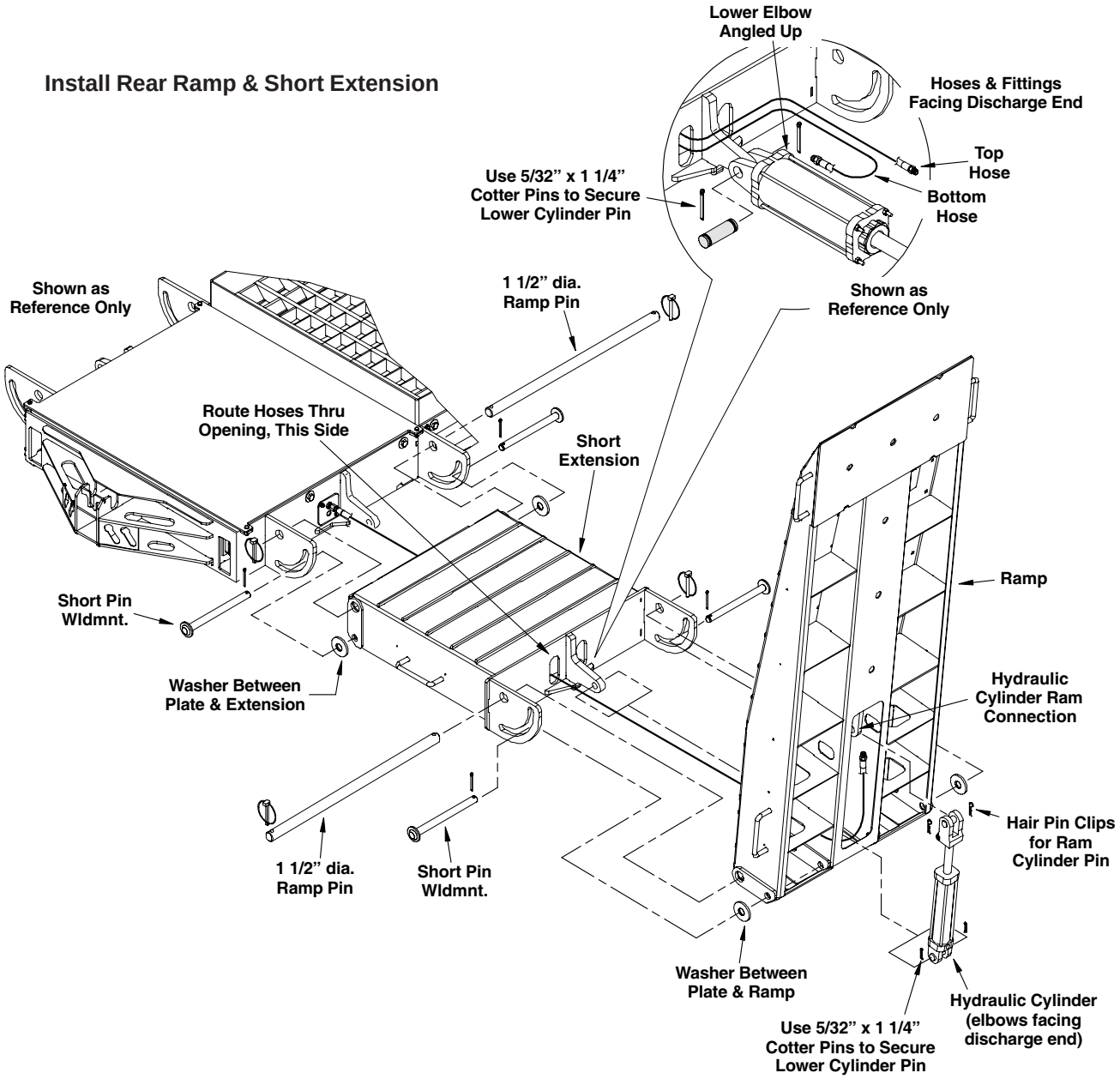

RAMP & EXTENSION INSTALLATION (Long Extensions)

Pre-Assemble Ramp Cylinder Mount Extension

1. Verify the 1 1/2" dia. *(38 mm)* x 34 1/2" *(87.6 cm)* long ramp pin freely slides through the holes of the ramp, ramp pivot weldment, cylinder mount extension and tube spacers (if necessary, grind smooth any abnormalities to ensure the pin slides through).
2. Position the ramps bottom side up on support stands (See illustration below). Attach the cylinder mount extension to the mounting ear of the ramp as shown below. Secure the cylinder mount extension using one 3 1/4" *(83 mm)* long pin weldment and 1/4" x 2" long cotter pin.
3. Align the mounting holes of the ramp pivot weldment with the holes on the sides of the ramp as shown in the illustration below (the pivot weldment ears will be positioned on the outside of the ramp).
4. Insert the 1 1/2" dia. x 34 1/2" long ramp pin through one side of the pivot weldment and ramp until it is flush with the inside channel.
5. Before sliding the ramp pin through the cylinder mount extension, install a 1 7/16" long tube spacer onto the ramp pin, insert pin into the cylinder extension, add another 1 7/16" long tube spacer on the other side of the cylinder extension and install ramp pin the remainder of the way through the ramp and pivot weldment. Secure the ramp pin using two 7/16" lynch pins (See illustration below).
6. Repeat this procedure on the remaining ramps.

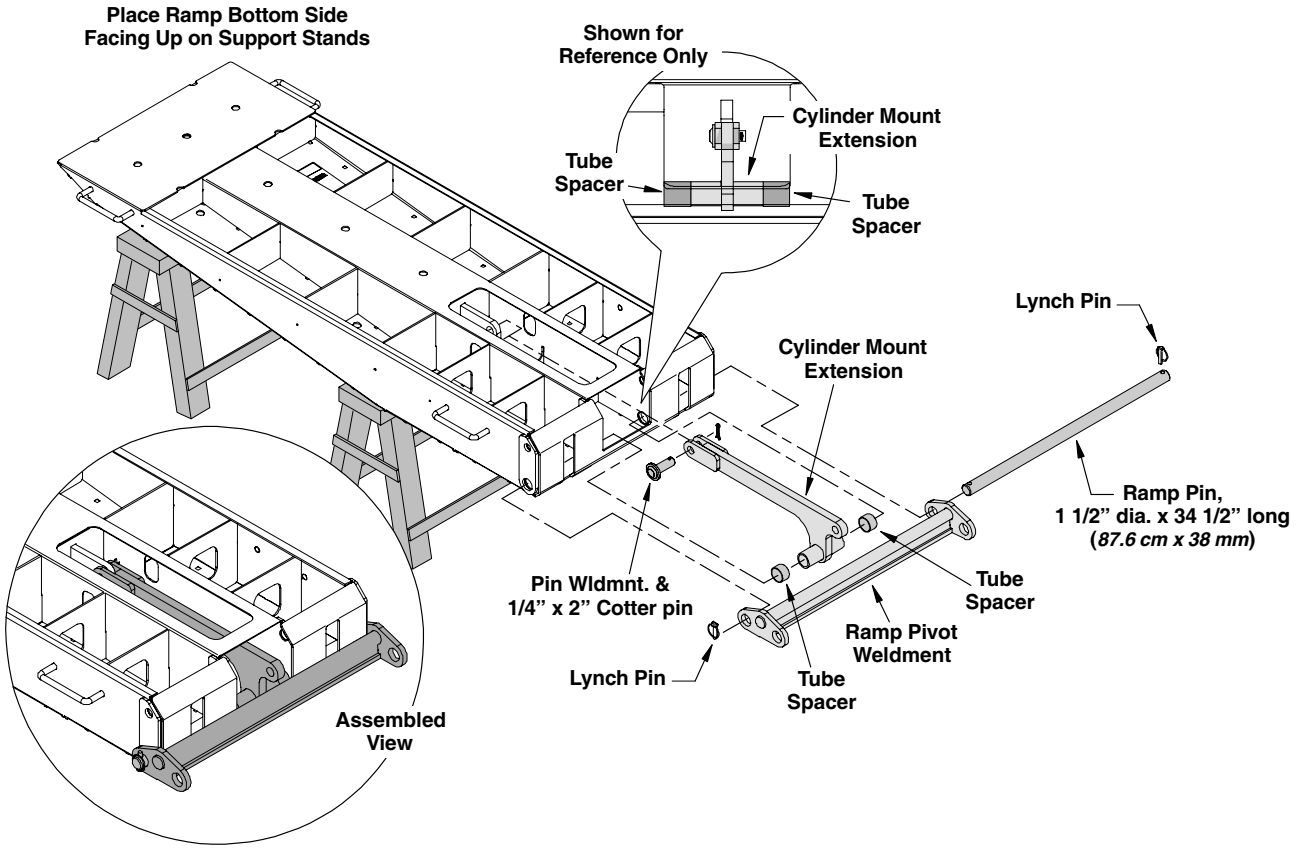

RAMP & EXTENSION INSTALLATION
LONG EXTENSIONS (con't.)

Remove Cover Plate from Long Extensions

1. Position the long extensions bottom side up. Loosen the six bolts on each side of the cover plate (it is not necessary to remove the bolts, the cover plate is slotted for ease of removal).

   Removal of the cover plate is necessary to allow access to the hydraulic cylinder and linkages during the remaining assembly procedures.

2. After the cover plate has been removed, verify the cylinder extension tube can move freely end to end (See illustration below).
3. Repeat these procedures on all remaining extensions.

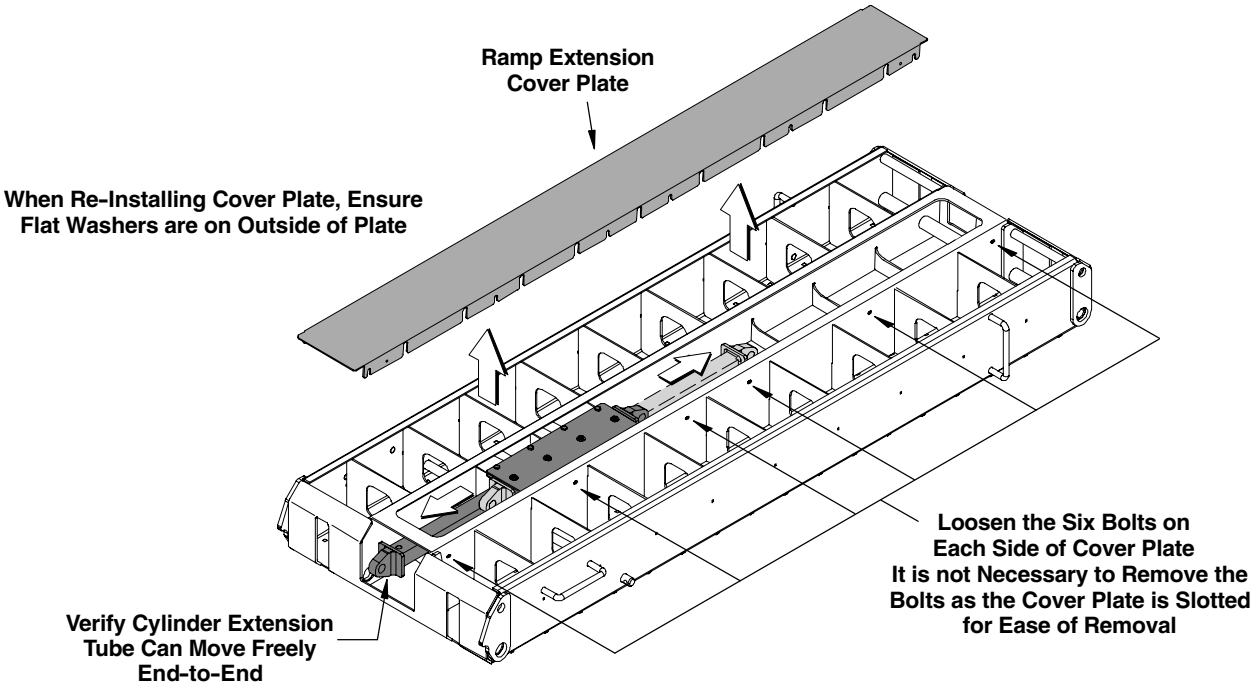

RAMP & EXTENSION INSTALLATION

LONG EXTENSIONS (con't.)

Install Long Ramp Extensions (Front Extension)

1. Position an extension at the front (discharge end) of the hopper as shown in the illustration below.

   Verify the 1 1/2" dia. *(38 mm)* x 34 1/2" *(87.6 cm)* long extension pin freely slides through the upper hole of the extension (if necessary, grind smooth any abnormalities to ensure the pin slides through).

2. Hoist the ramp extension vertically into position and attach it to the hopper assembly with the 34 1/2" extension pin, secure the pin using the 7/16" lynch pins provided.

3. Pivot the ramp extension slightly in order to install the 12 5/16" long stop pins. Insert a 1" flat washer between the ramp extension and the rigid mount plate of the hopper and install a stop pin with the welded washer end to the outside (See illustration below).

   Secure the stop pin with a 1/4" x 2" cotter pin (the cotter pin will be on the inside of the middle channel).

   Repeat ramp extension installation procedures on the opposite side of the conveyor hopper.

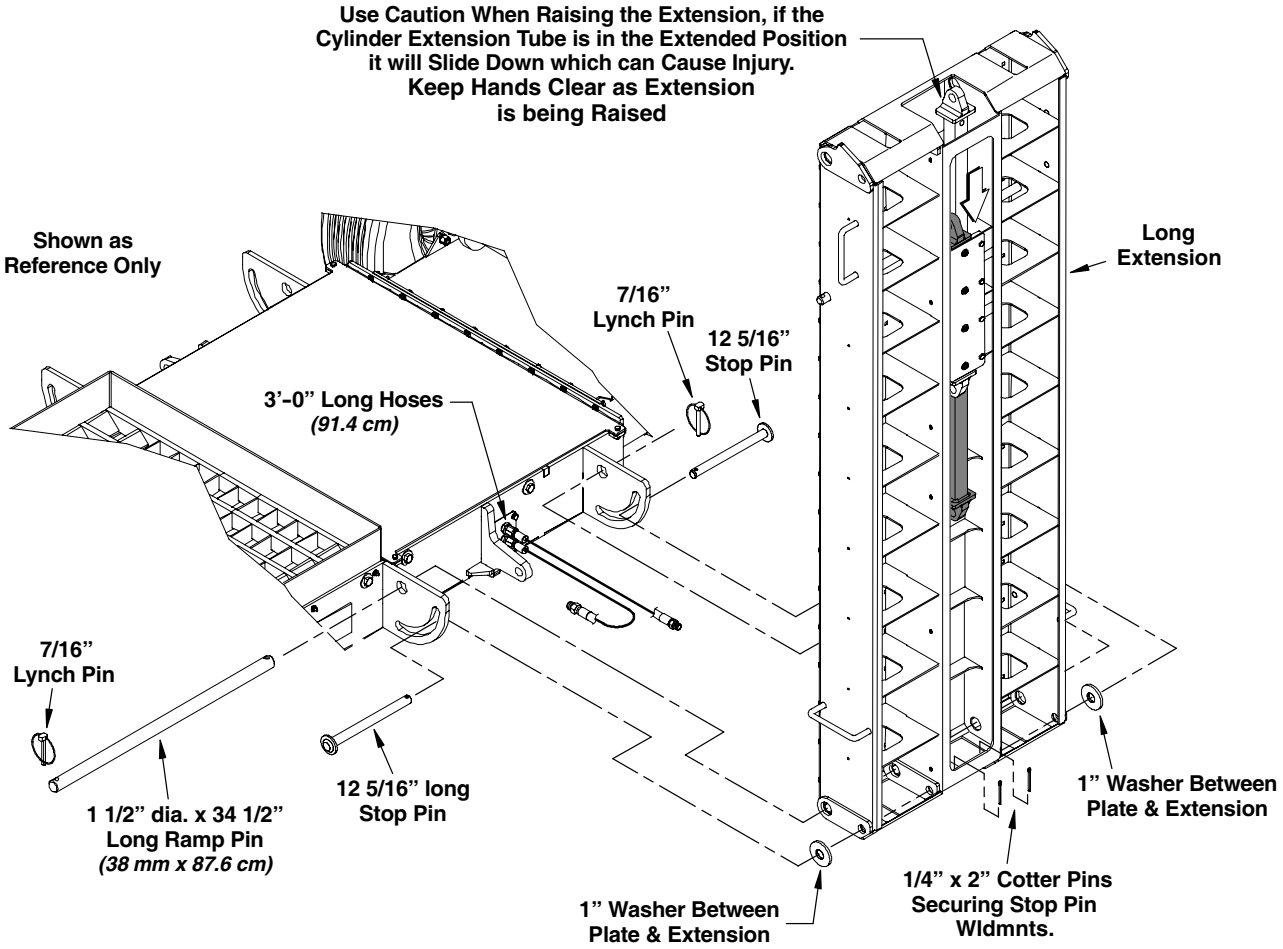

RAMP & EXTENSION INSTALLATION
LONG EXTENSIONS (con't.)

Pre-Assemble and Install Hydraulic Cylinders

1. Remove the plastic plugs from the ports on all the 3" x 24" stroke hydraulic cylinders.

   Rub a coat of clean hydraulic oil onto the o-rings of each 90° elbow. Install the elbows into the ports on the cylinders (tighten elbows so their openings are facing each other as shown in illustration below).

2. Apply teflon tape to the threads of the restrictor fittings and install the restrictor fittings into each of the elbows.

Install Hydraulic Cylinders (Front Extensions)

1. Position cylinder with the base to the mounting ear on the hopper (elbows facing towards hitch end). Secure the cylinder to the mounting ear on the hopper with the cylinder pin and two 5/32" x 1 1/4" cotter pins. **IMPORTANT! It is critical to replace the hair pin clips sent with the cylinder pins with the cotter pins provided. The hair pin clips can be forced out causing uncontrolled movement of the ramps potentially resulting in serious injury or death. Ensure the cotter pins are used in place of the hair pin clips.**

2. Secure the ram end of the cylinder to the end of the cylinder extension tube. Secure using the cylinder pin and hair pin clips provided with the cylinder (See illustration below).

3. Route the 3' *(91.4 cm)* long hoses through the opening at bottom of extension, behind the cylinder and connect hoses to the restrictor fittings on the elbows (top hose to upper elbow near cylinder ram, bottom hose to lower elbow near cylinder base).

   Secure hoses to cylinder body using a heavy duty cable tie to prevent hoses from shifting to a position where they could become damaged.

   Repeat cylinder installation on the opposite front ramp extension.

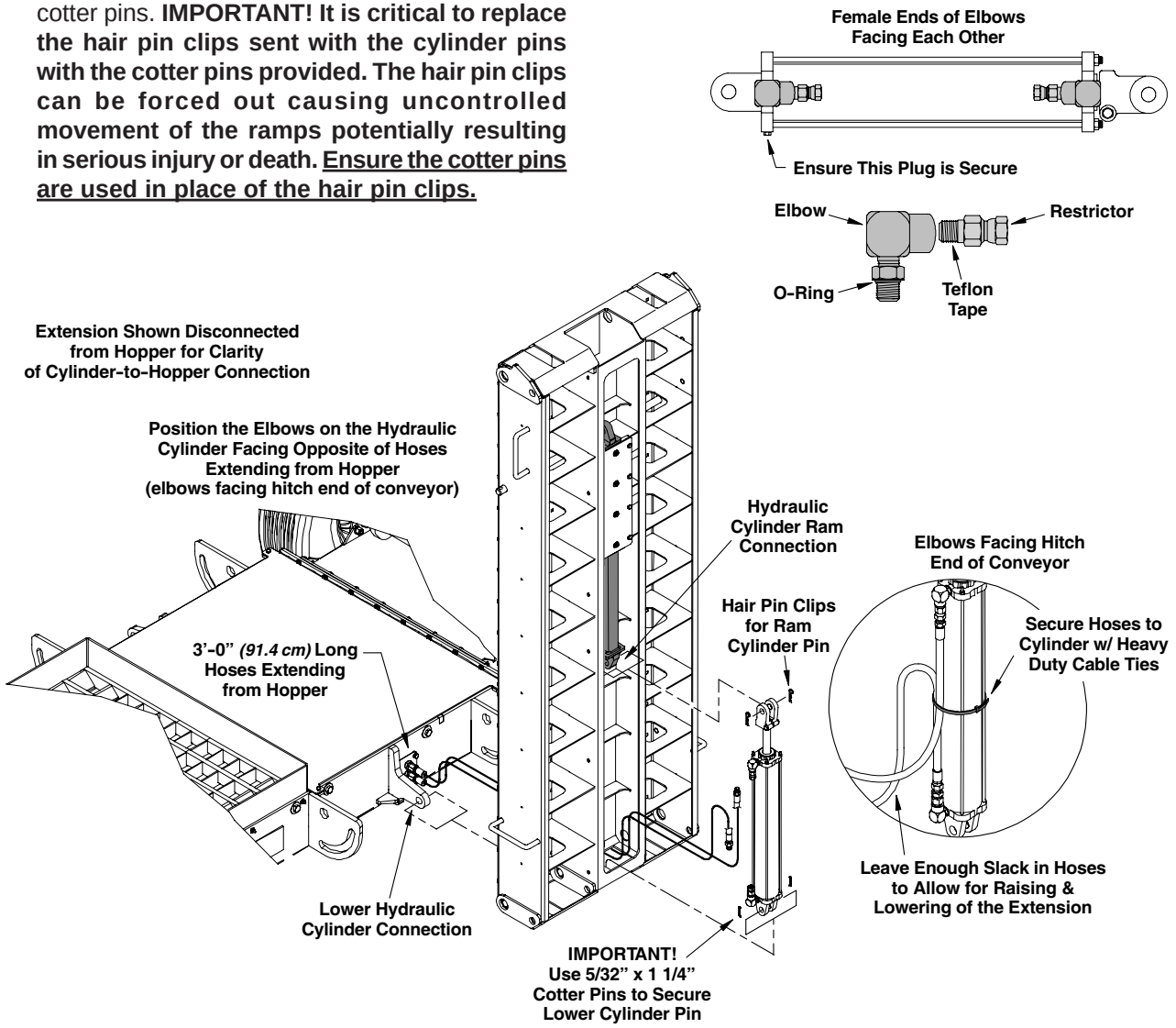

INSTALL HYDRAULIC CYLINDERS, FRONT EXTENSION (con't.)

4. Extend the cylinder extension tube to the outer end of the ramp extension (this will also extend the hydraulic cylinder ram). Position an approximately 12" *(30.5 cm)* long rod or bar between the extension frame and end of the extension tube to keep the tube from retracting (See illustration below).

5. Lower the ramp extension to the ground and unhook the lifting device. Repeat these procedures on the opposite front ramp extension.

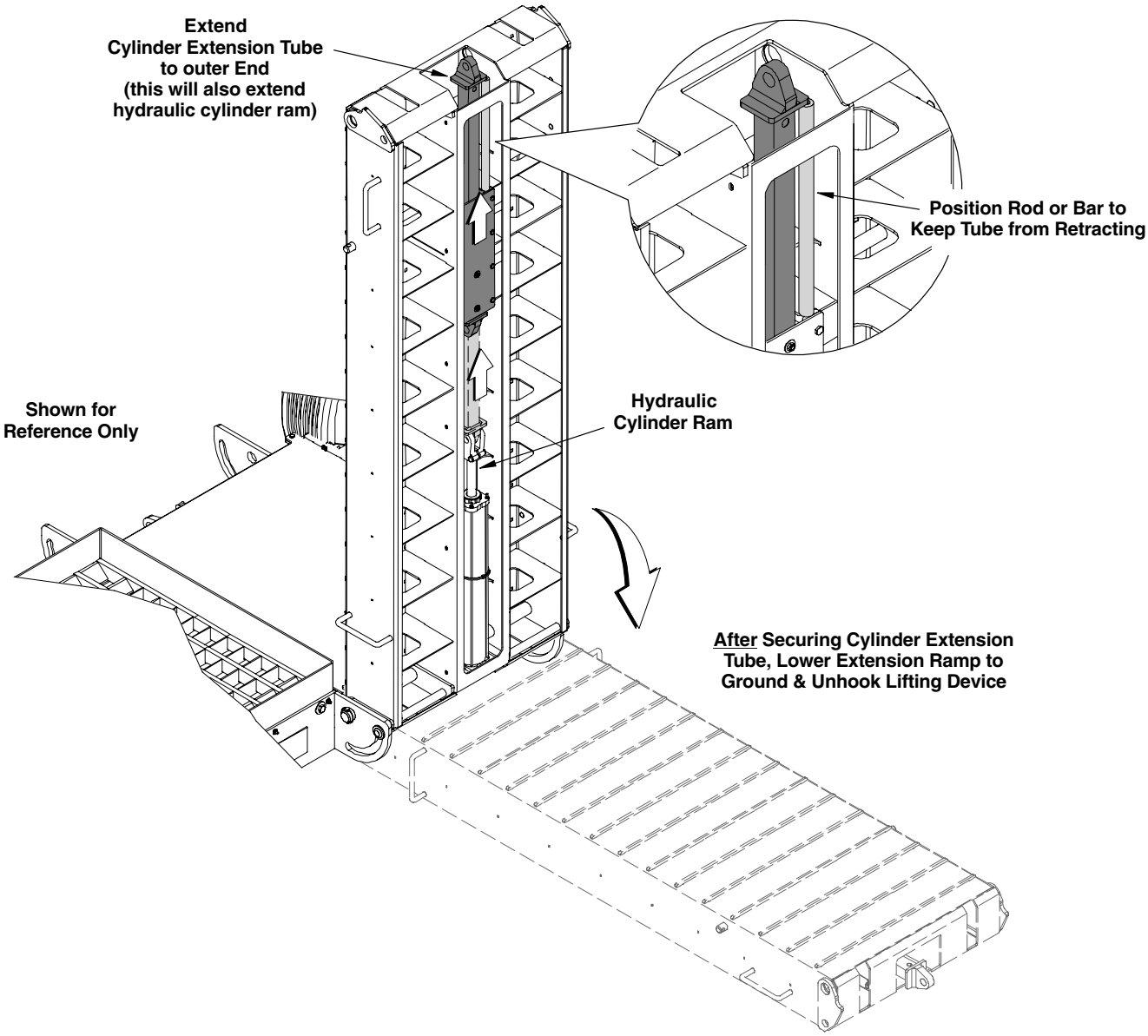

RAMP & EXTENSION INSTALLATION

Long Extensions (con't.)

Install Ramp to Front Extensions

1. Position a ramp near the end of the ramp extension. Verify the 1 1/2" dia. *(38 mm)* x 34 1/2" *(87.6 cm)* long ramp pin freely slides through the holes of the ramp pivot weldment and through the mounting holes on the ramp extension (if necessary, grind smooth any abnormalities to ensure the pin slides through).
2. Connect lifting device to tapered end of ramp and lift ramp to a vertical position.
3. Position the ears of the ramp pivot weldment over the end of the ramp extension and align the mounting holes. Slide the 1 1/2" dia x 34 1/2" long ramp pin through both ramp and extension and secure using two 7/16" lynch pins (See illustration below).
4. After the connection has been made, fold the ramp down so it rests on top of the extension.

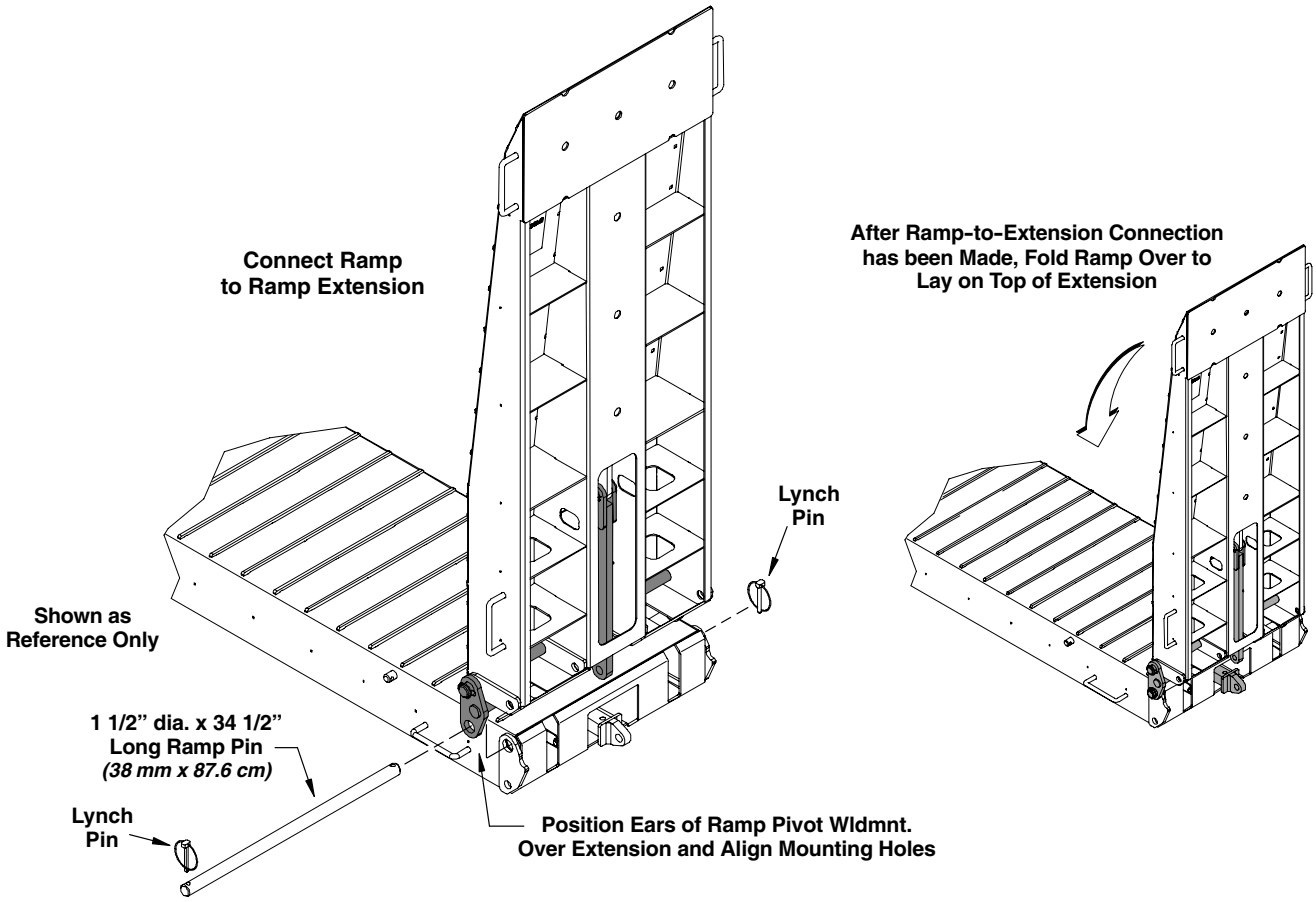

INSTALL RAMP TO FRONT EXTENSIONS (con't.)

5. Remove the rod or bar used to keep the cylinder extension tube from retracting.
6. Attach one end of the ramp linkage weldment to the end of the cylinder mount extension on the ramp using one 3 1/4" long pin weldment and 1/4" x 2" cotter pin (See illustration below).
7. Attach the other end of the ramp linkage to the end of the cylinder extension tube and secure using one 3 1/4" long pin weldment and 1/4" x 2" cotter pin.
8. After ramp linkage has been installed, unfold ramp and lay ramp flat on the ground.
9. Repeat these procedures for ramp installation on the opposite front ramp extension.

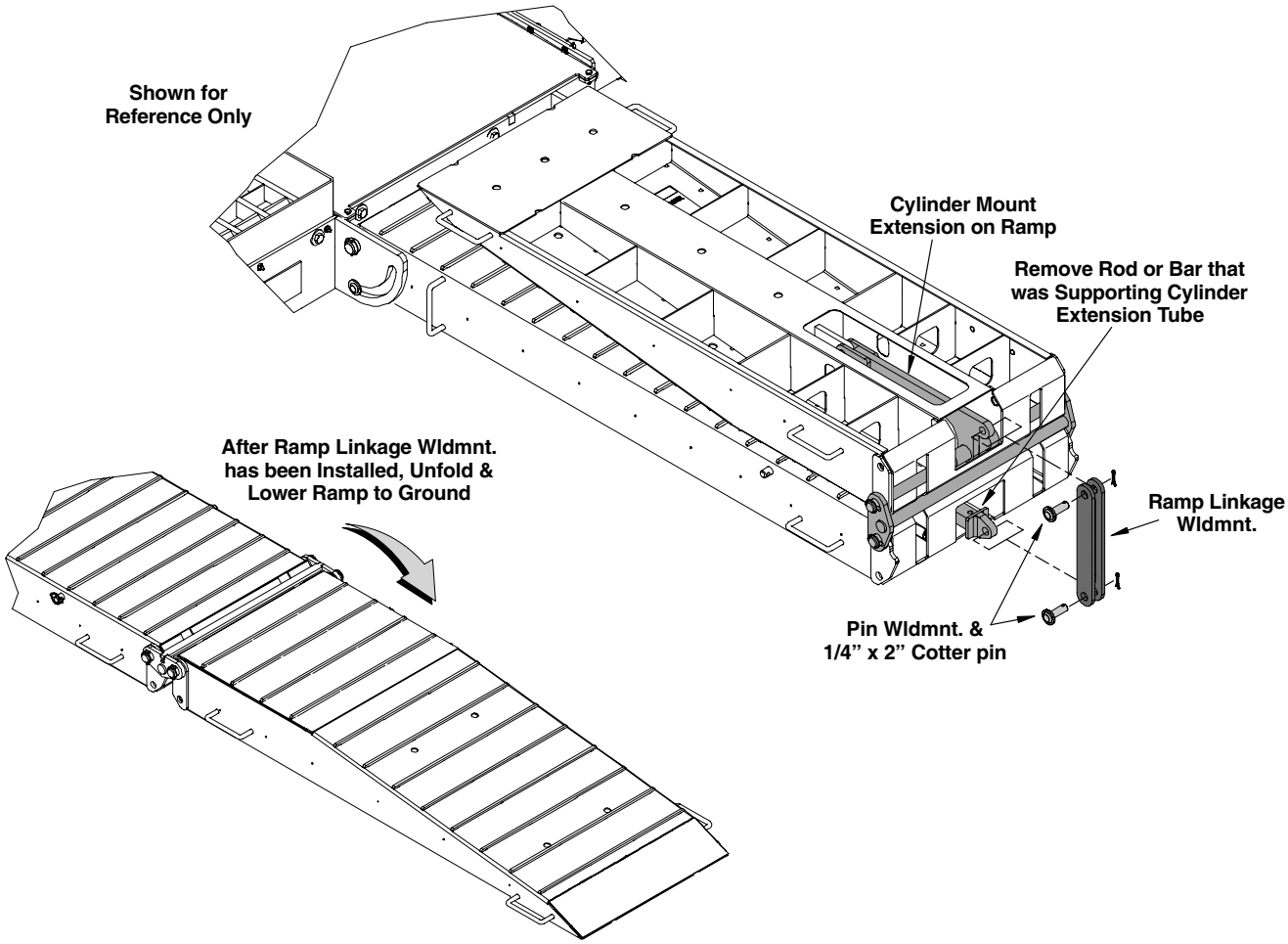

RAMP & EXTENSION INSTALLATION

Long Extensions (con't.)

Install Ramp Extensions (Rear Extension)

1. Position an extension at the rear (hitch end) of the hopper as shown in the illustration below.

   Verify the 1 1/2" dia. *(38 mm)* x 34 1/2" *(87.6 cm)* long extension pin freely slides through the upper hole of the extension (if necessary, grind smooth any abnormalities to ensure the pin slides through).

2. Hoist the ramp extension vertically into position and attach it to the hopper assembly with the 34 1/2" extension pin, secure the pin using the 7/16" lynch pins provided.

3. Pivot the ramp extension slightly in order to install the 12 5/16" long stop pins. Insert a 1" flat washer between the ramp extension and the rigid mount plate of the hopper and install a stop pin with the welded washer end to the outside (See illustration below).

   Secure the stop pin with a 1/4" x 2" cotter pin (the cotter pin will be on the inside of the middle channel).

   Repeat these procedures on the opposite side of the rear ramp extension.

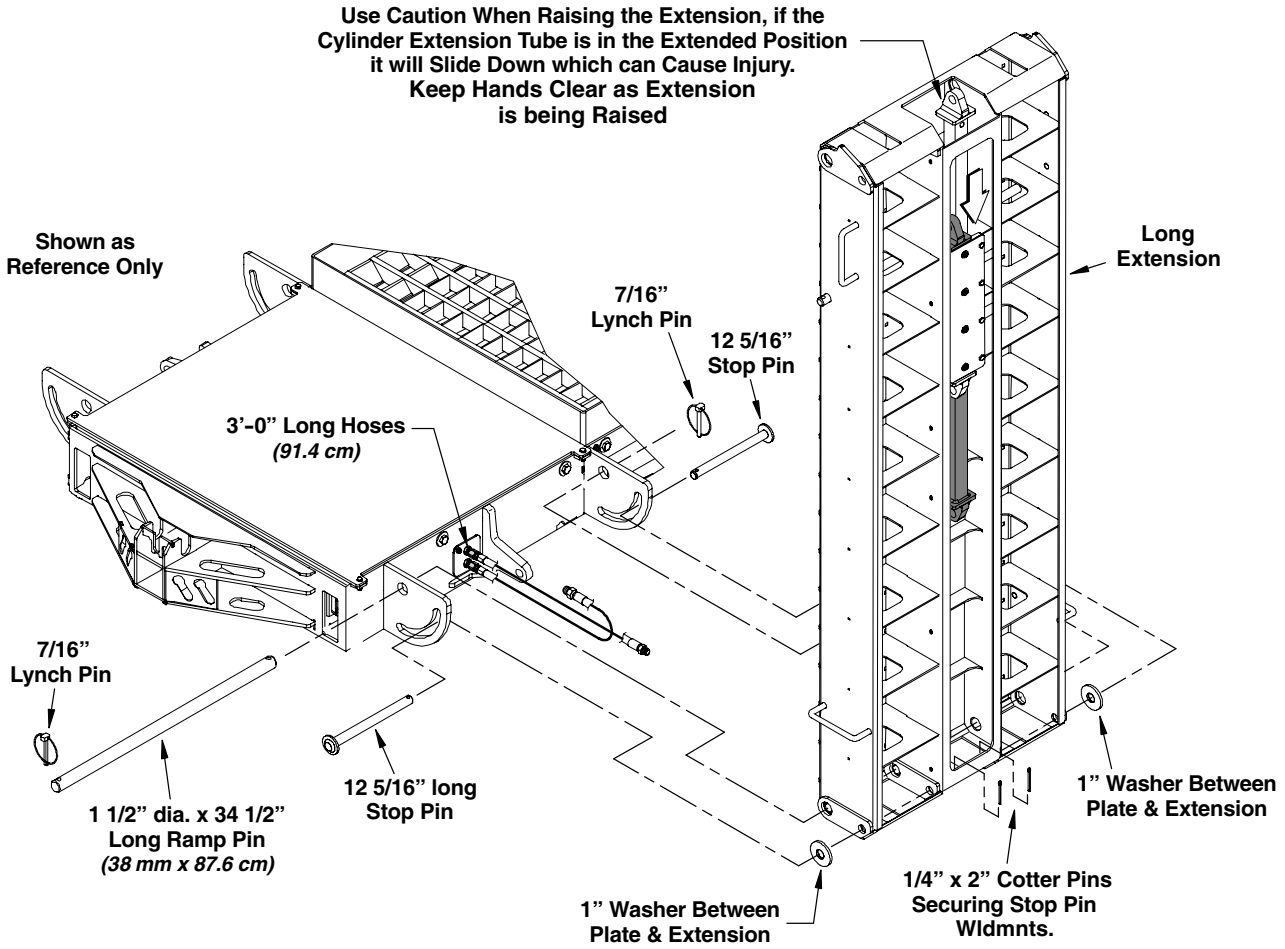

INSTALL RAMP EXTENSIONS,
REAR EXTENSION (con't.)

Install Hydraulic Cylinders (Rear Extensions)

1. Position cylinder with the base to the mounting ear on the hopper (elbows facing towards discharge end). Secure the cylinder to the mounting ear on the hopper with the cylinder pin and two 5/32" x 1 1/4" cotter pins. **IMPORTANT! It is critical to replace the hair pin clips sent with the cylinder pins with the cotter pins provided. The hair pin clips can be forced out causing uncontrolled movement of the ramps potentially resulting in serious injury or death. Ensure the cotter pins are used in place of the hair pin clips.**
2. Secure the ram end of the cylinder to the end of the cylinder extension tube. Secure using the cylinder pin and hair pin clips provided with the cylinder (See illustration below).
3. Route the 3' *(91.4 cm)* long hoses through the opening at bottom of extension, behind the cylinder and connect hoses to the restrictor fittings on the elbows (top hose to upper elbow near cylinder ram, bottom hose to lower elbow near cylinder base).

   Secure hoses to cylinder body using a heavy duty cable tie to prevent hoses from shifting to a position where they could become damaged.

   Repeat cylinder installation procedures on the opposite rear ramp extension.

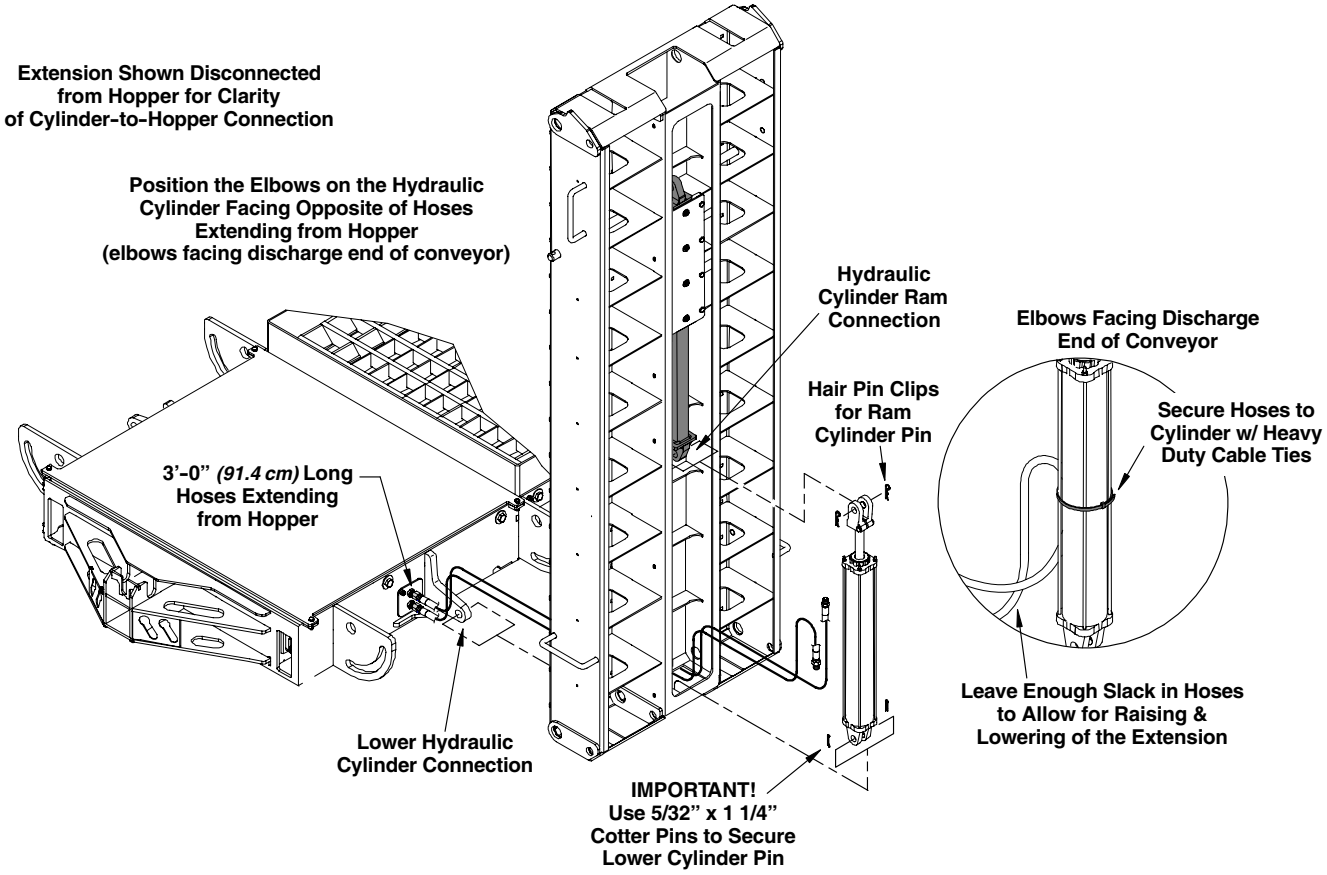

INSTALL HYDRAULIC CYLINDERS, REAR EXTENSION (con't.)

4. Extend the cylinder extension tube to the outer end of the ramp extension (this will also extend the hydraulic cylinder ram). Position an approximately 12" *(30.5 cm)* long rod or bar between the extension frame and end of the extension tube to keep the tube from retracting (See illustration below).

5. Lower the ramp extension to the ground and unhook the lifting device. Repeat these procedures on the opposite rear ramp extension.

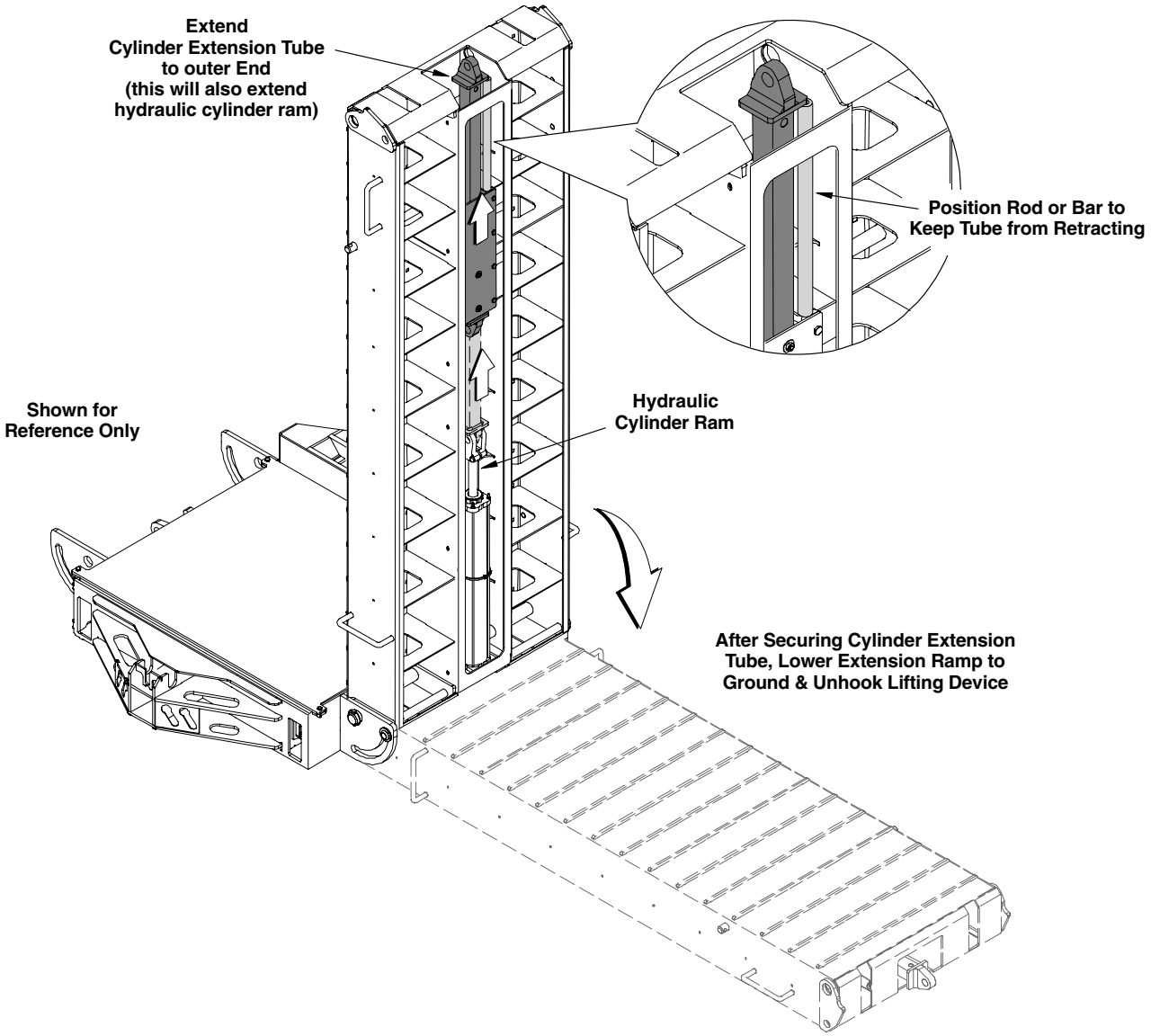

RAMP & EXTENSION INSTALLATION

Long Extensions (con't.)

Install Ramp to Rear Extensions

1. Position a ramp near the end of the ramp extension. Verify the 1 1/2" dia. *(38 mm)* x 34 1/2" *(87.6 cm)* long ramp pin freely slides through the holes of the ramp pivot weldment and through the mounting holes on the ramp extension (if necessary, grind smooth any abnormalities to ensure the pin slides through).
2. Connect lifting device to tapered end of ramp and lift ramp to a vertical position.
3. Position the ears of the ramp pivot weldment over the end of the ramp extension and align the mounting holes. Slide the 1 1/2" dia x 34 1/2" long ramp pin through both ramp and extension and secure using two 7/16" lynch pins (See illustration below).
4. After the connection has been made, fold the ramp down so it rests on top of the extension.

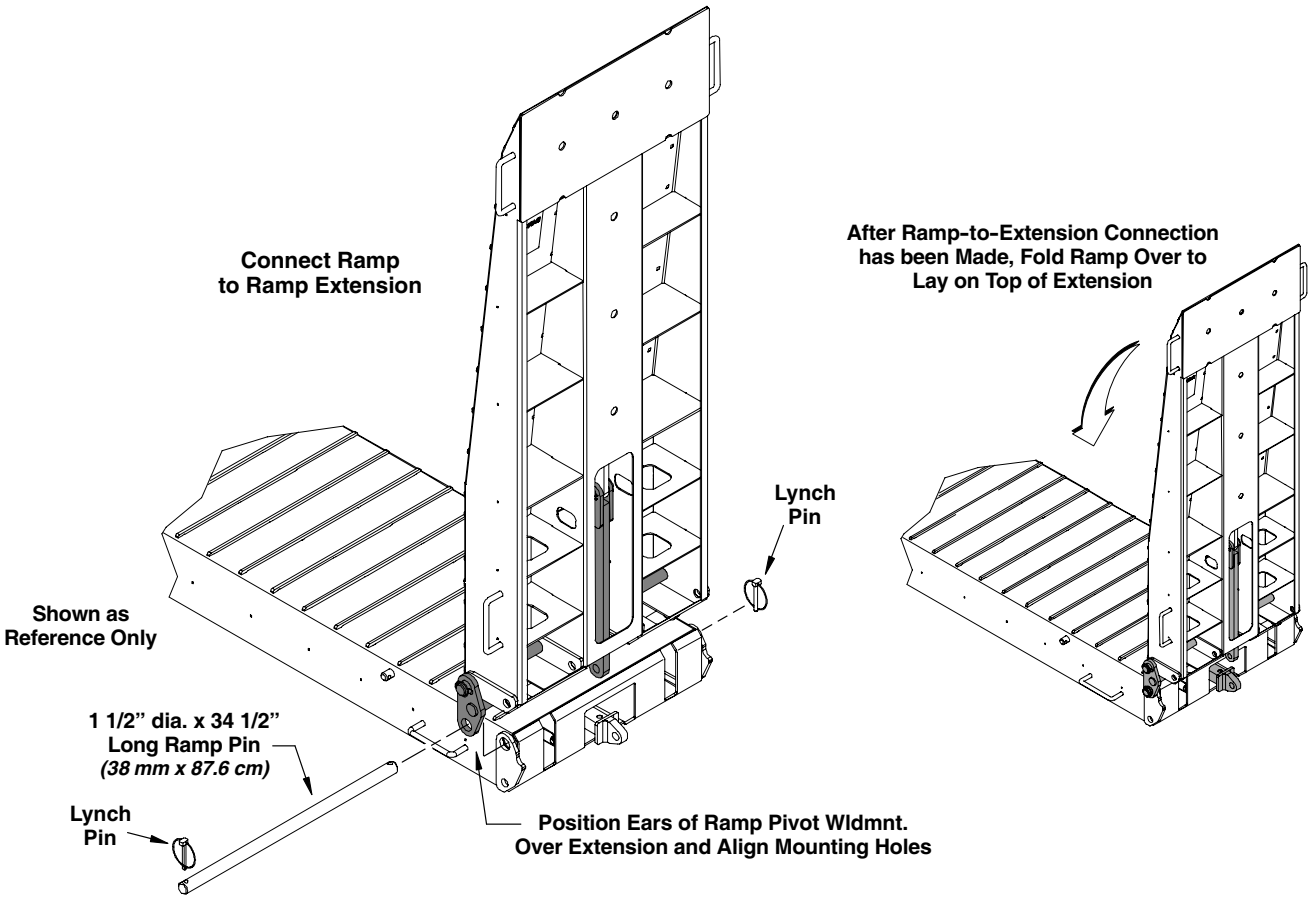

INSTALL RAMP TO REAR EXTENSION (con't.)

5. Remove the rod or bar used to keep the cylinder extension tube from retracting.
6. Attach one end of the ramp linkage weldment to the end of the cylinder mount extension on the ramp using one 3 1/4" long pin weldment and 1/4" x 2" cotter pin (See illustration below).
7. Attach the other end of the ramp linkage to the end of the cylinder extension tube and secure using one 3 1/4" long pin weldment and 1/4" x 2" cotter pin.
8. After ramp linkage has been installed, unfold ramp and lay ramp flat on the ground.
9. Repeat these procedures for ramp installation on the opposite front ramp extension.

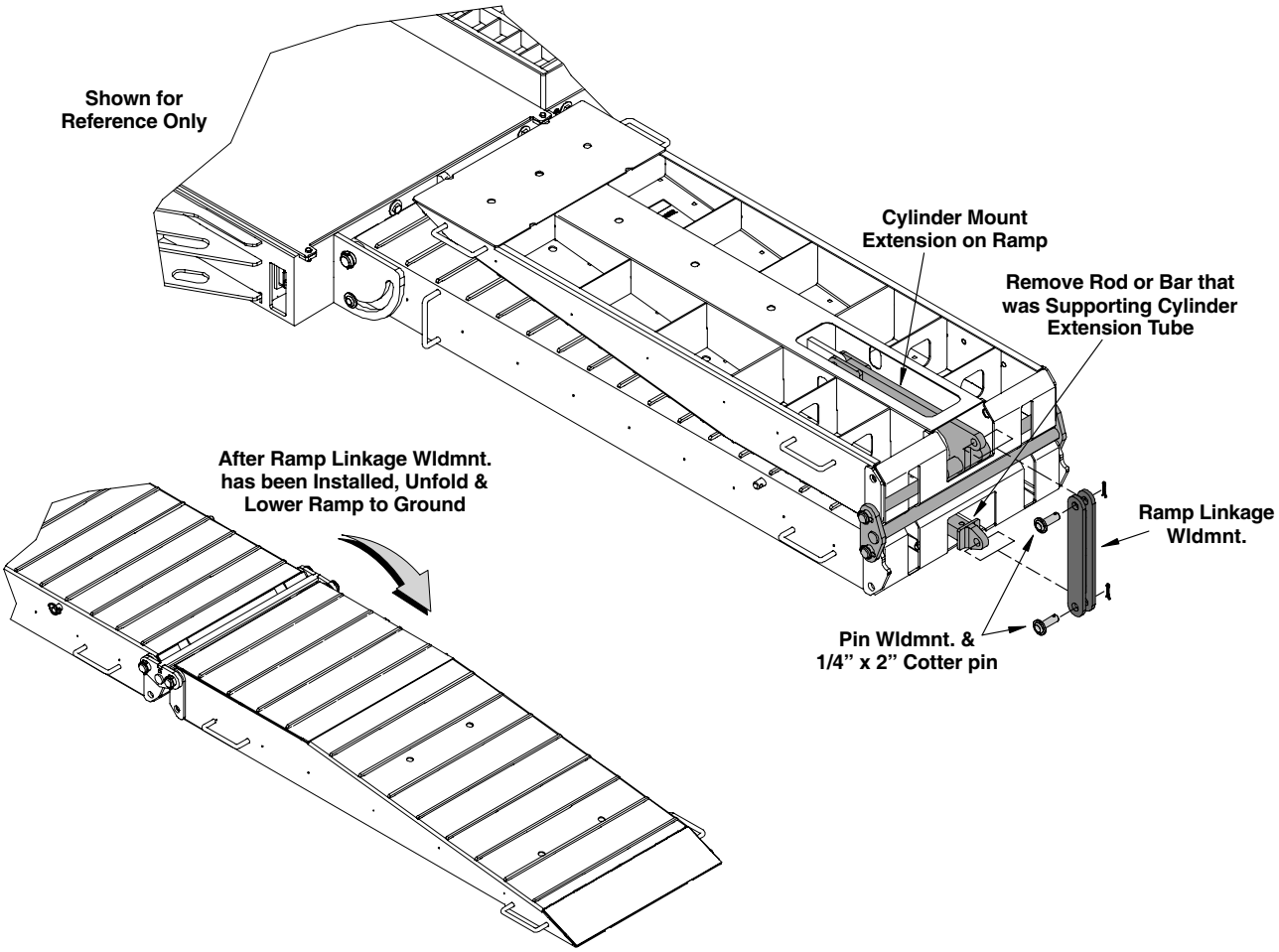

ELECTRIC DRIVE ASSEMBLY

Install Motor and Belt Guard

1. Mount the motor onto the motor mount plate [electric motor and mounting hardware not furnished, 15 HP *(11 kw)* 1750 RPM motor required].

   Electrical motor and controls shall be installed by a qualified electrician and must meet the standards set by the National Electrical Code and all local and state codes.

2. Attach the upper belt guard bracket (larger bracket) to the crossmember on top of head assembly (See illustration below). Secure bracket using two (2) 5/8" x 1 1/2" bolts and lock washers (the crossmember has weld nuts already installed).
3. Attach the lower belt guard bracket (smaller bracket) to the reducer plate (end of bracket with longer leg attaches to the reducer plate). Secure using two (2) 1/2" x 1 1/4" bolts and nylon locknuts.
4. Install belt guard and secure to brackets using four (4) 1/2" x 1 1/4" bolts, flat washers and nylon locknuts.
5. Install the bushing (1 5/8" bore), key and 7.4" dia. sheave onto the motor shaft (leave loose for alignment with the reducer sheave). Position the sheave as close to the back of the belt guard as possible without actually contacting the guard.
6. Install bushing (1 1/8" bore), key and 9.4" dia. sheave onto the reducer shaft. Align sheaves by placing a straight edge across the face of the sheaves. Secure sheaves into place and tighten setscrews to lock into place.
7. Install belts and set tension. Using the adjustment bolts (See illustration below), set tension so there is approximately 1/2" *(13 mm)* of deflection on each belt when belts are firmly pressed in the center of the span between the sheaves.
8. Close belt guard door and ensure it can be properly secured when completely closed.

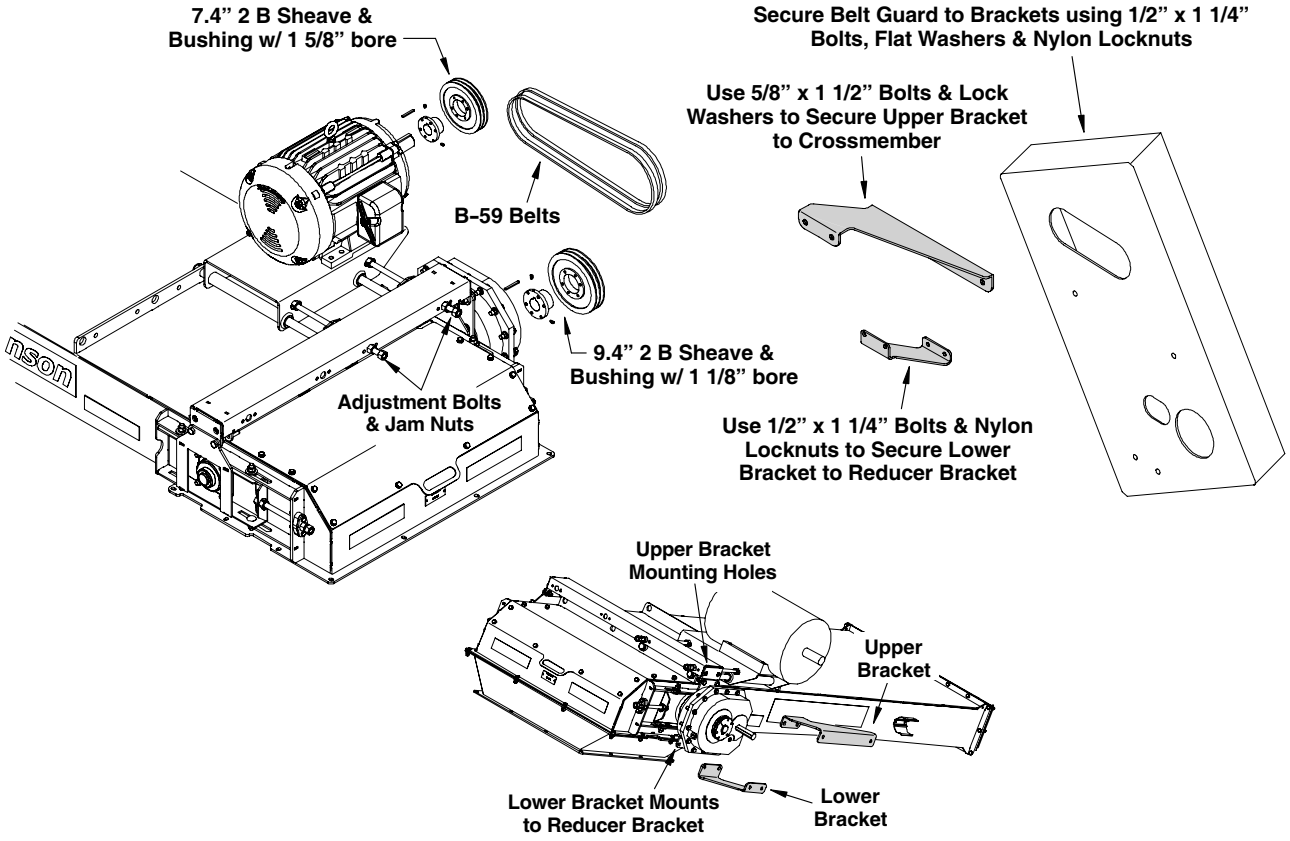

INSTALL SPOUT

1. Install the spout to the discharge end of the conveyor. Secure the spout using 3/8" x 1 1/4" bolts, flat washers, lock washers and non-lock nuts (position the flat washers on the bottom side of the flange over the slotted holes). See Fig. 13.

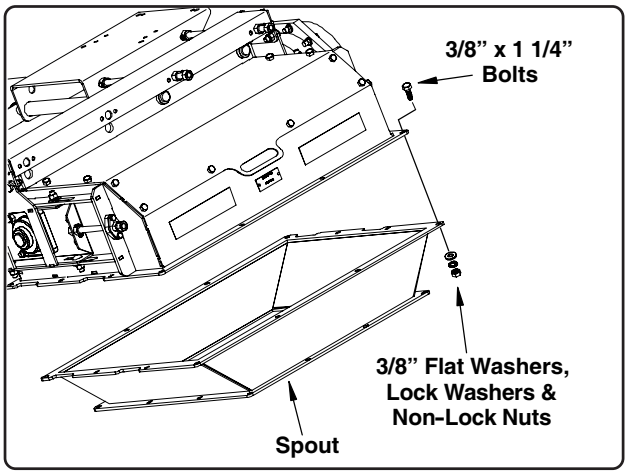

Fig. 13

INSTALL TIRE & RIMS

1. Mount the tires and rims to the axle hubs and secure using the lug bolts provided (See Fig. 14).

   Verify tire pressure is correct using the PSI rating stated on the tire.

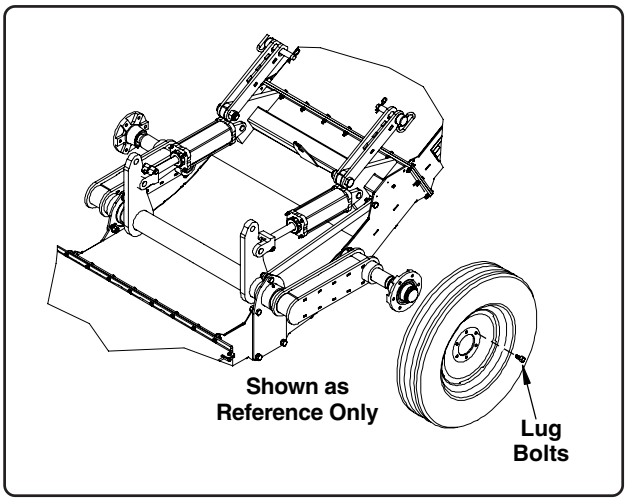

Fig. 14

INSTALL HITCH ASSEMBLY

1. Insert the hitch tube into the hopper as shown in Fig. 15 below. Secure the hitch using the short 6" *(15.2 cm)* long hitch pin and secure with the lynch pin provided.
2. Install the implement hitch to the end of the hitch tube securing it with two 1" x 6 1/2" bolts and nylon locknuts (See Fig. 15). **Note: Verify top and bottom of implement hitch when installing.**
3. Mount the jack onto the jack mount tube and secure using the attached safety pin.

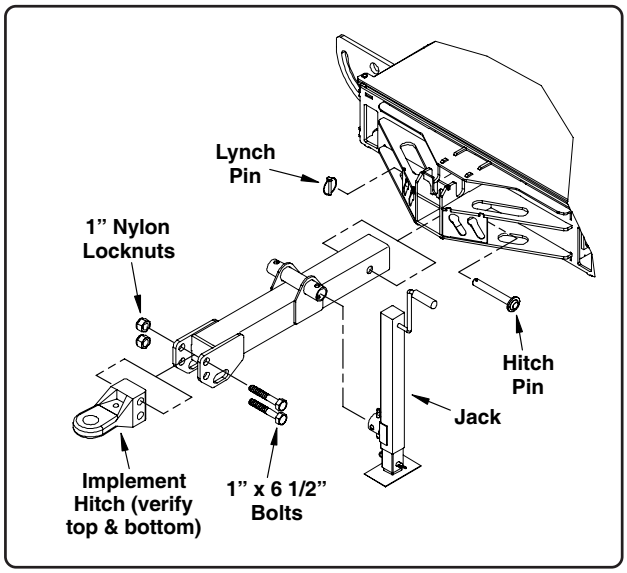

Fig. 15

RAMP or RAMP & EXTENSION OPERATION

After all ramps and extensions (if applicable) have been installed, verify proper ramp operation.

Position conveyor on level ground for operation.

Units w/ Ramps & No Extensions, and Units w/ Ramps & Short Extensions

All ramps should raise and lower evenly. When raised, the ramps will be at an approximate 85 degree angle. When lowered, all ramps should lay flat on the ground.

Charge Hydraulic System

The hydraulic system will need to be pressurized when first attempting to raise the ramps. This is done by charging the hydraulic system in small increments to allow hydraulic oil to reach all cylinders. Pressurize the cylinders to raise the ramps a little, then lower them, raise them a little, then lower them, repeating in small increments until all cylinders appear to raise and lower at the same time.

Do Not try raising the ramps in one initial burst, this can cause damage to the hydraulic system and/or its components.

IMPORTANT! After cycling ramps, or the ramps and extensions several times, check thoroughly for any hydraulic leaks and any interference between hoses and moving parts. Address if necessary.

After proper ramp operation has been verified, the same will need to be done for the hydraulics that raise and lower the **axle**. Raise and lower repeatedly in small increments until fully charged.

Units w/ Ramps and Long Extensions

Proper folding of the ramps and long extensions is when the outer ramps first fold up and over onto the long extensions; the ramp ***and*** extensions will then raise to approximately 85 degrees.

Proper unfolding is when the extensions unfold and lay flat on the ground, ***then*** the ramps unfold until they too are laying flat on the ground.

Charge Hydraulic System

When all hydraulic hoses have been connected and you are trying to fold the ramps, the hydraulic system will need to be properly pressurized. This is done by charging the hydraulic system in small increments to allow hydraulic oil to reach all cylinders.

Meaning, pressurize the cylinders to fold, then unfold, fold then unfold, repeating in small increments until all cylinders appear to be functioning properly.

Ramps and extensions should fold and unfold evenly. If not, stop use and correct immediately.

Units w/ Ramps & Long Extensions (con't.)

Do Not try raising the ramps in one initial burst, this can cause damage to the hydraulic system and/or its components.

Do Not allow ramps to free-fall.

ABSOLUTELY CRITICAL! When folding the ramps, it is critical that the extensions lower to the ground *before* the ramps start to unfold.

If the outer ramp begins to unfold before the long extension complpetely lowers, reverse hydraulic flow and return ramps to transport position and install transport bar (See Transporting Conveyor, "Transport Bar f/ Ramps w/ Long Extensions").

Verify conveyor is positioned on level ground. If not, relocate conveyor and attempt unfolding ramps again. If ramps do not attempt to unfold properly, return ramps to transport position, install transport bar and consult factory.

After proper ramp operation has been verified, the cover plates previously removed from the bottom side of the extensions can now be reinstalled (See Fig. 16).

IMPORTANT! After cycling ramps and extensions several times, check thoroughly for any hydraulic leaks and any interference between hoses and moving parts. Address if necessary.

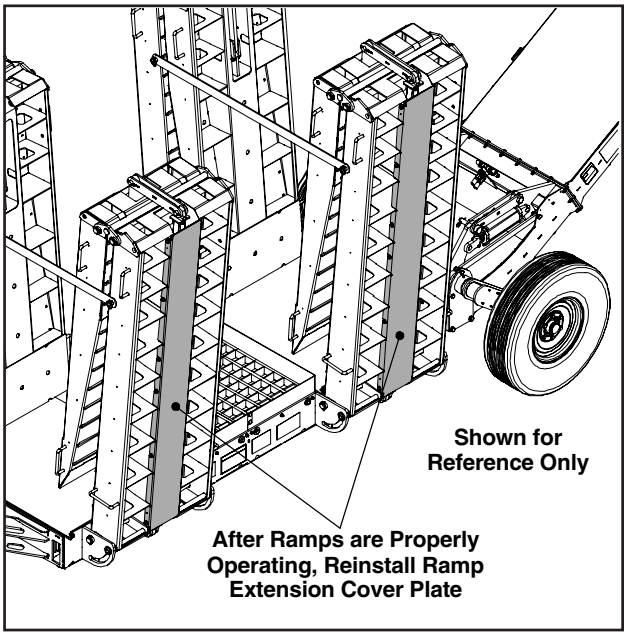

Fig. 16

After ramp and extension operation has been verified, the same will need to be done for the hydraulics that raise and lower the **axle.** Raise and lower repeatedly in small increments until fully charged.

SAFETY CHAINS f/ RAMPS w/ NO EXTENSIONS & SHORT EXTENSIONS

When transporting the conveyor it is crucial to ensure ramps and axles are properly secured to prevent damage to the conveyor and its components.

Safety chains are provided to secure the ramps when they are in the upright position. Fasten the safety chains to each of the handles on the ramps, chain across front-to-front, chain across rear-to-rear (See illustration below).

Secure the manual canister to the side of the conveyor by sliding into the clamp located on left side of the head assembly. Make sure all manuals and other documents are inside the canister and kept with the conveyor.

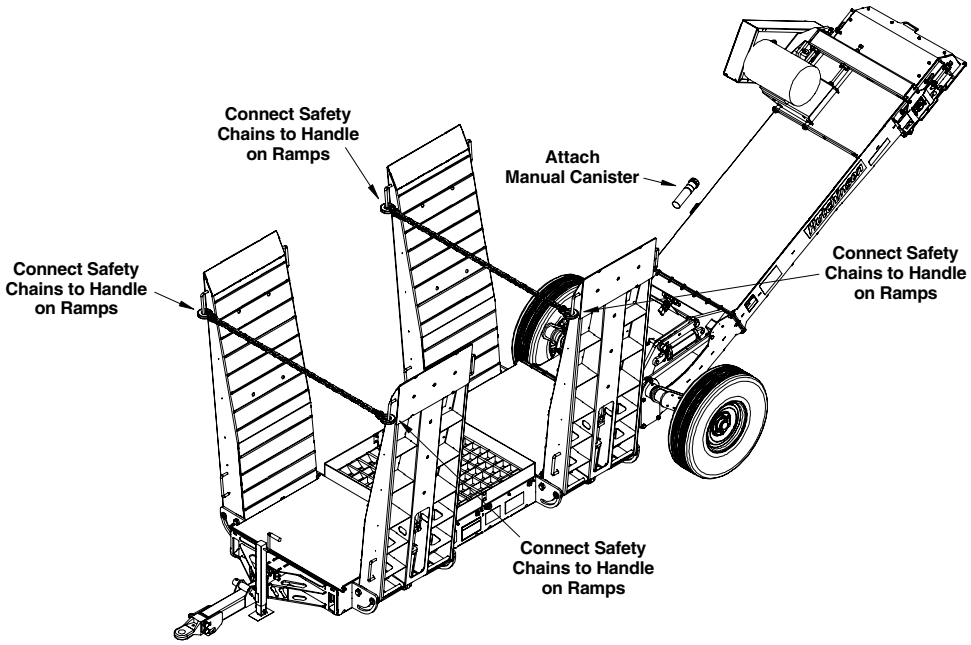

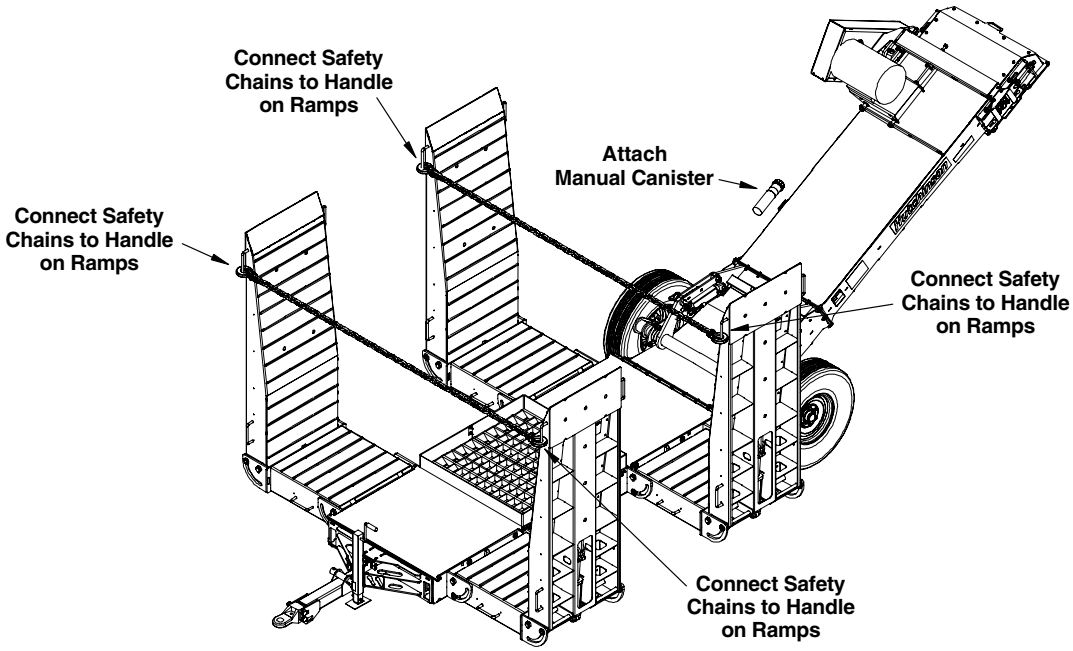

TRANSPORT BAR f/ RAMPS w/ LONG EXTENSIONS

Transport bars are provided to secure the ramps when they are in the upright position. Fasten each end of the transport bar to the transport pins on the sides of the long extensions and secure with the lynch pins provided (See illustration below).

To store transport bars when not in use, insert one end of the bar in the lower handle on the extension and secure the other end to the transport pin, store the other lynch pin in the transport pin not being used.

Secure the manual canister to the side of the conveyor by sliding into the clamp located on left side of the head assembly. Make sure all manuals and other documents are inside the canister and kept with the conveyor.

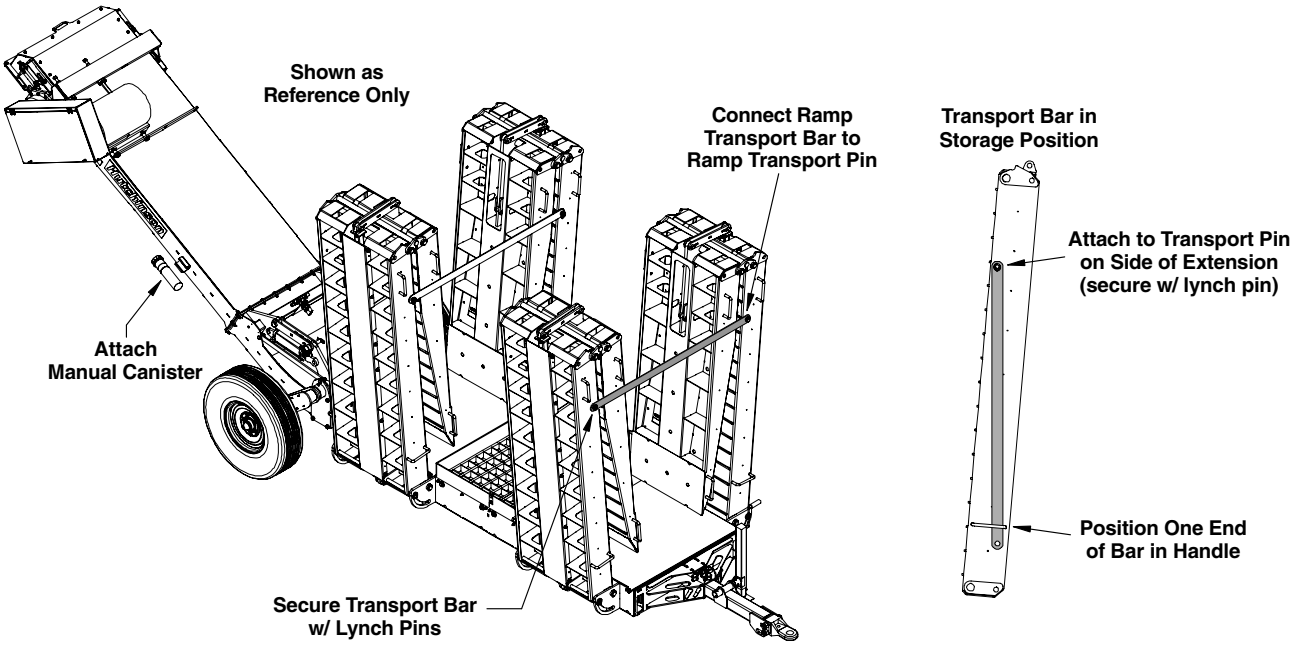

AXLE TRANSPORT ARMS

It is also necessary to lock the axles into transport position. With axles fully lowered, the transport arms can be rotated and secured to the top hole of the axle ears (See Fig. 17). Secure using the transport pins and hair pins provided.

TRANSPORTING CONVEYOR

Before transporting conveyor, ensure all hydraulic hoses are properly stored and secured to prevent damage to the hoses and their fittings.

Make sure tire pressure is correct and that all lug bolts are tight.

Check all covers, guards and panels to ensure they are secure and in place.

Electrical cords should be secured and properly stored during transport.

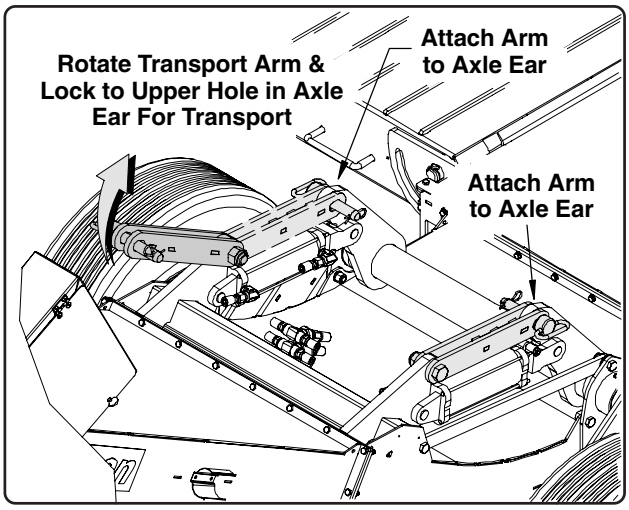

Fig. 17

PARTS LIST TABLE OF CONTENTS

All parts and components listed are used on the Commercial DriveOver Conveyor whether the conveyor uses No-Ramps, Short-Ramps or Long-Ramps.

When illustrations show an item that is used in more than one application, the parts list will denote those particular parts and reference the application they belong to.

SAFETY DECALS & SIGNS

Item No. 6 – Danger: Crushing Hazard Decal is Located on Bottom Side of Ramps and on Bottom Side of the Long Extensions

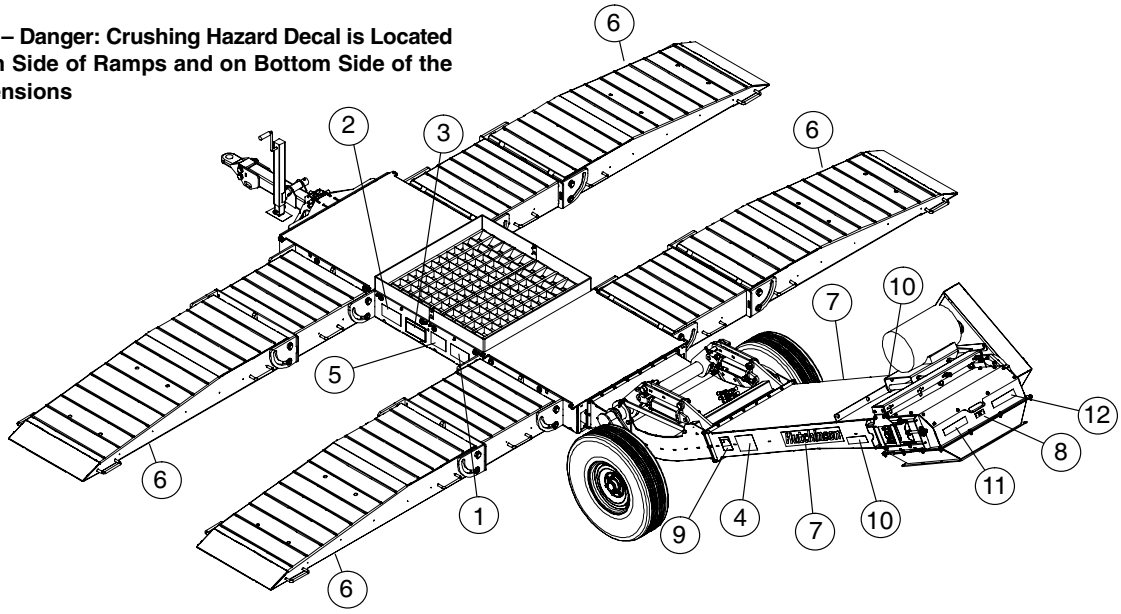

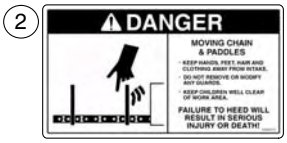

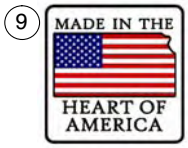

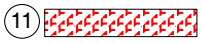

Ref. No.	Part No.	Description	Ref. No.	Part No.	Description
1	1012872	Decal, Danger: Do Not Operate...	7	1001125	Decal, Hutchinson
2	1002311	Decal, Danger: Moving Chain...	8	34687	Serial No. Plate
3	1001973	Decal, Caution: General Operator	9	1041833	Decal, USA Flag
4	1002301	Decal, Caution: General Information	10	1021180	Decal, Yellow Reflective
5	1005324	Decal, Danger: If Any Guards...	11	1021179	Decal, Red Reflective
6	1035676	Decal, Danger: Crushing Hazard	12	1021181	Decal, Red/Orange Reflective

HOPPER COMPONENTS & 30° CORNER

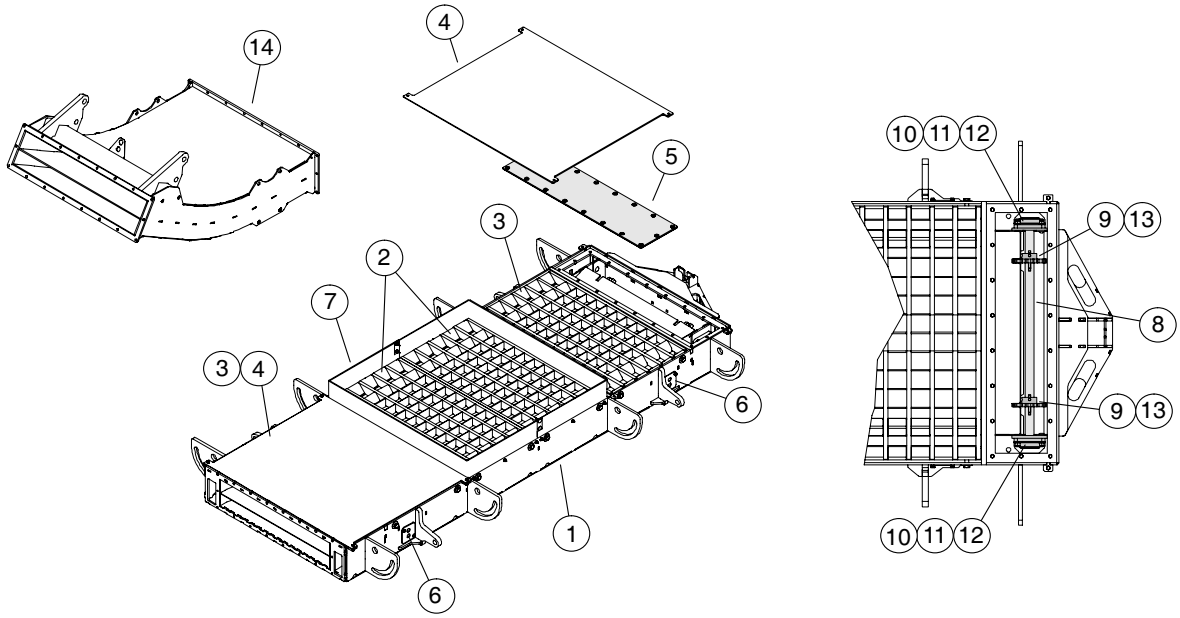

Ref. No.	Part No.	Description
1	1041547	Hopper Weldment, Drive-Over
2	1041710	Grating Weldment, Narrow
3	1041709	Grating Weldment, Wide
4	1041560	Plate, Drive-Over
5	1041707	Cover, Bearing Weldment
6	1044425	Plate, Removable Bulkhead Fitting
7	1041722	Belting, Drive-Over Hopper
8	1041550	Tail Shaft, Drive-Over Hopper
9	1034759	Sprocket, 550 9T 1 1/2” bore
10	1010A	Bearing, 4-Hole Flange, 1 1/2”
11	1035490	Seal, UHMW f/ Bearing
12	1044534	Cover f/ Bearing
13	4049A1	Key, 3/8” sq. x 1 1/2” long
14	1041574	Corner, 30° f/ Drive-Over

CHAIN & PADDLES

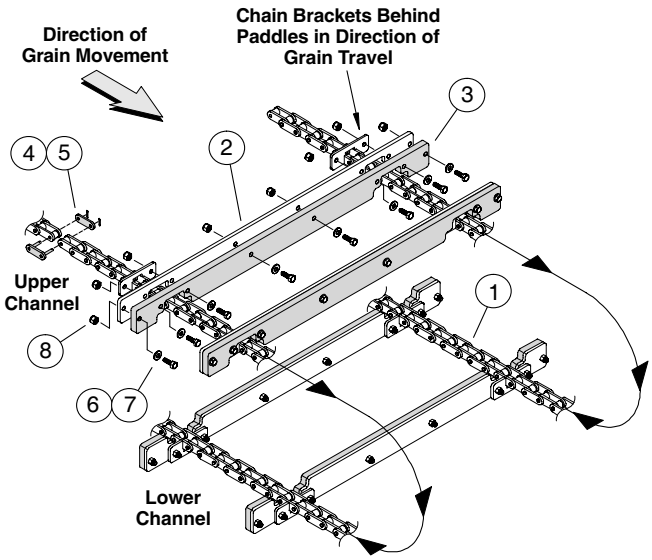

Ref. No.	Part No.	Description
1	1034761	Chain, CA550 80 pitch 10’-10 1/2” long (130 7/16”)
2	1041803	Plate, Paddle Backing
3	1041552	Paddle, UHMW, 3/8” thick
4	40352	Connecting Link, CA550
5	41492	Offset Link, CA550 (not shown)
6	4736	Bolt, 5/16”-18 x 1 1/2”
7	33023	Washer, 5/16” Flat
8	33135	Nut, 5/16”-18 Nylon Lock

AXLE & AXLE HYDRAULIC CYLINDERS

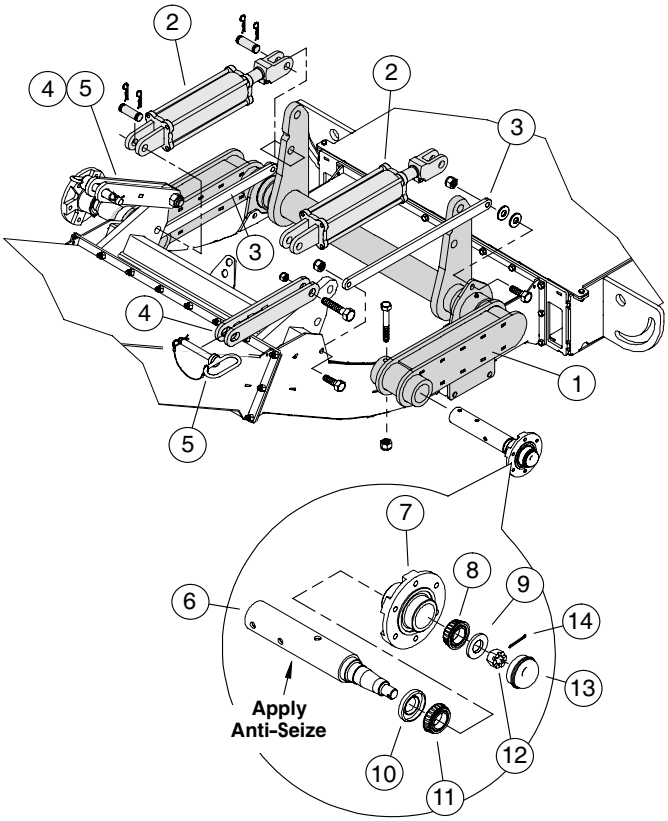

Ref. No.	Part No.	Description
1	1041635	Axle Weldment f/ Comm. Dr Over
2	1030723	Cylinder, Hydraulic (3” bore x 8” stroke)
3	1041775	Brace f/ 30° Corner
4	1041859	Arm, Transport f/ Comm. Dr Over
5	1041904	Pin, 1” O.D. x 4 1/2” long
6	1034108	Spindle Weldment
7	1025911	Hub Assembly, 6 Bolt
8	3079R1	Outer Bearing Cone (Timken No. LM67048)
9	D1148	Washer, 2” O.D. x 15/16” I.D.
10	1026088	Seal, Grease
11	1026089	Inner Bearing Cone (Timken No. JL69349)
12	D1147	Nut, 7/8-14 UNF Castle
13	107234	Dust Cap
14	107230	Pin, 5/32” x 1.75” Cotter

HYDRAULIC HOSES f/ AXLE CYLINDERS

Ref. No.	Part No.	Description
1	1030723	Hydraulic Lift Cylinder (3” bore x 8” Stroke)
2	1041284	Hydr. Bulkhead Fitting. 1/2” NPT
3	1041348	Lock Nut f/ Bulkhead Fitting
4	1040071	Hydraulic Tee, 1/2” FM NPT
5	1044602	Hydr. Hose, 1’-6” *(45.7 cm)* long 1/2” M-NPT-S x 1/2” M-NPT-NS
6	1044610	Hydr. Hose, 2’-2” *(66.0 cm)* long 1/2”-M-NPT-S x 1/2” M-NPT-NS
7	1040072	Hydr. 90° Elbow, SAE 8, M-F
8	1044601	Hydr. Hose, 23’-0” *(7.01 m)* long 1/2” NPT-M-NS x 1/2” NPT-F-S

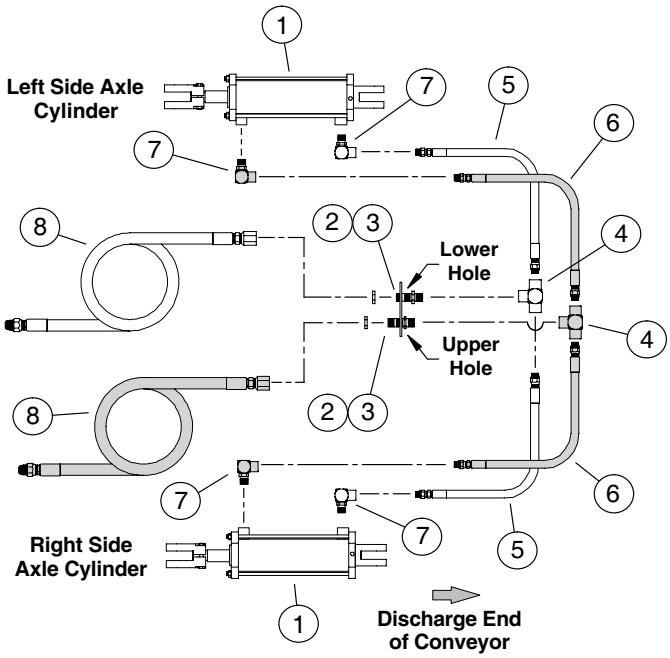

HEAD ASSEMBLY & SPOUT

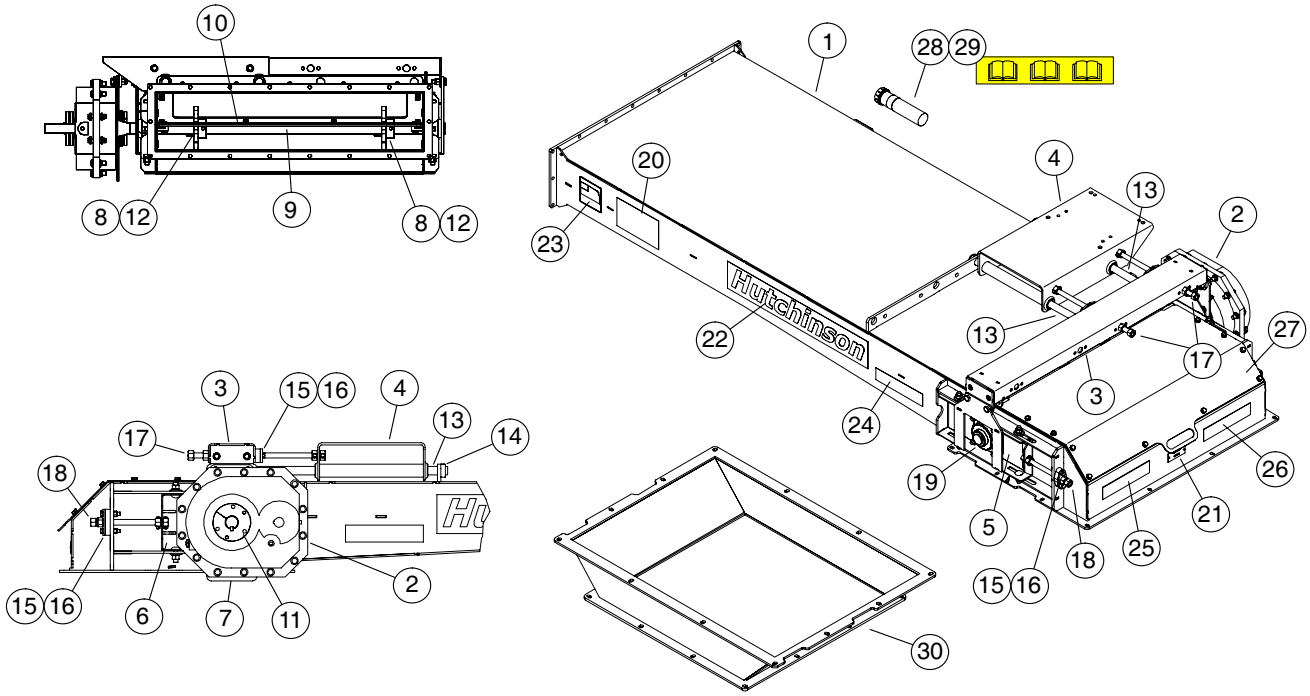

The complete Head Assembly can be obtained by ordering:
Part No. 1047176 (complete assembly includes items 1 thru 27).

Ref. No.	Part No.	Description
1	1041599	Head Weldment f/ Comm. Dr Over
2	1040862	Reducer, Dodge TA2115H05
3	1047180	Cross Support Weldment
4	1047185	Plate, Motor Mount
5	1041613	Take-Up Plate, Bearing Side
6	1047174	Take-Up Plate, Reducer Side
7	1047183	Cross Support Mount Plate, Reducer Spacer
8	1034759	Sprocket, 1 1/2” Bore
9	1041772	Head Shaft
10	1041773	Divider Panel, Moveable
11	1041779	Bushing Kit f/ Reducer
12	1036078	Key, 3/8” sq. x 2 1/2” long
13	1041617	Slide Rod f/ Motor Mount
14	3324A1	Collar Set, 1”
15	1041629	Spacer f/ 5/8” Nut
16	1041630	Retainer f/ 5/8” Nut
17	1041625	Take-Up Rod Weldment
18	1043937	Take-Up Bolt Assembly
19	1010A	Bearing, 4-Hole Flange 1 1/2”
20	1002301	Decal, Caution: General Operator
21	34687	Serial Plate
22	1001125	Decal, Hutchinson
23	1041833	Decal, USA Flag
24	1021180	Decal, Yellow Reflective
25	1021179	Decal, Red Reflective
26	1021181	Decal, Red/Orange Reflective
27	1047199	Access Cover
28	1036990	Canister f/ Manual
29	1004461	•Decal, Manual Inside
30	1041756	Spout, 90° Low Profile Hopper

• Indented Parts Names Indicate these Parts are Included in the Previous Assembly.

RAMP w/ NO EXTENSION COMPONENTS

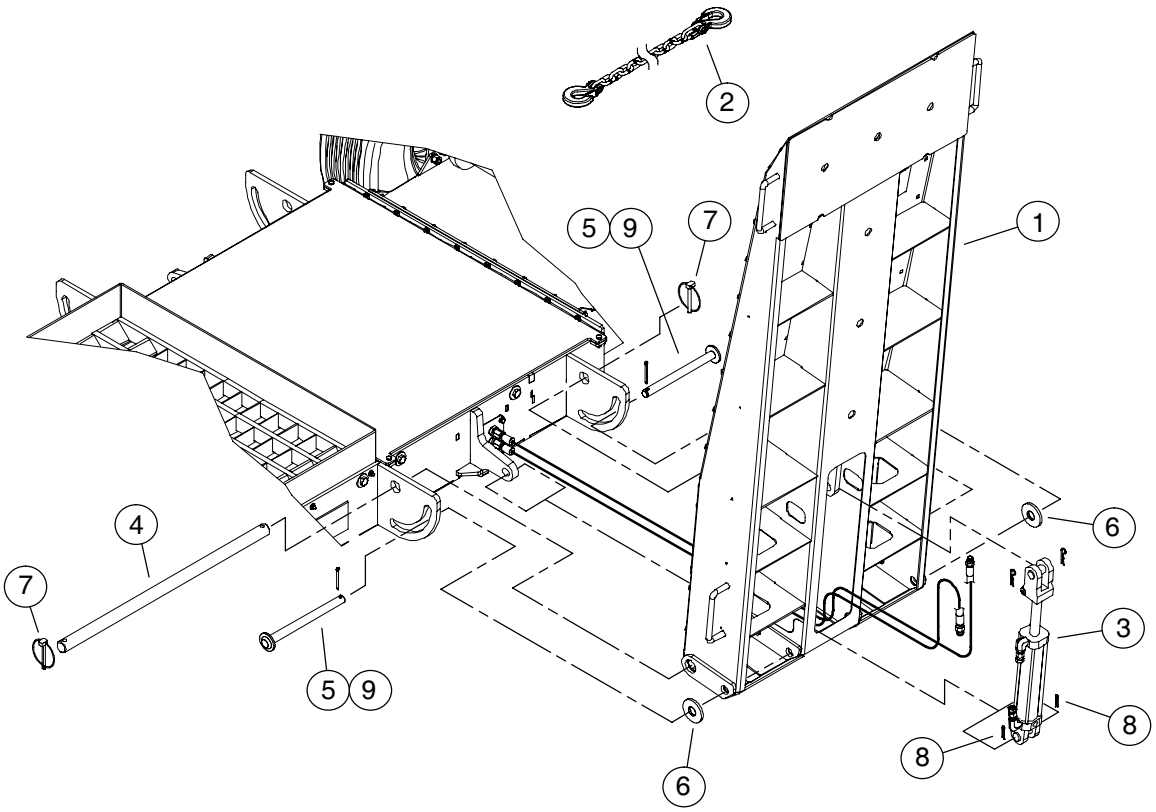

All parts listed are used on all four ramp assemblies for the conveyor. Refer to the Hydraulic Components Parts List (Page P-8) for Fittings and Hoses used with the Hydraulic Cylinders.

Ref. No.	Part No.	Description
1	1041650	Ramp f/ Comm. Drive-Over
2	1044639	Safety Chain, Transport 77 9/16" *(1.97 m)* long
3	1041669	Hydraulic Lift Cylinder, 2" bore x 8" stroke
4	1041665	Pin, Ramp, 1 1/2" dia. x 34 1/2" *(38 mm x 87.6 cm)* long
5	1044432	Pin Weldment (ramp stop)
6	D1160	Washer, 1" Flat PLTD
7	33364	Lynch Pin, 7/16"
8	D1146	Pin, 5/32" x 1 1/4" Cotter
9	D1263	Pin, 1/4" x 2" Cotter

RAMP & SHORT EXTENSION COMPONENTS

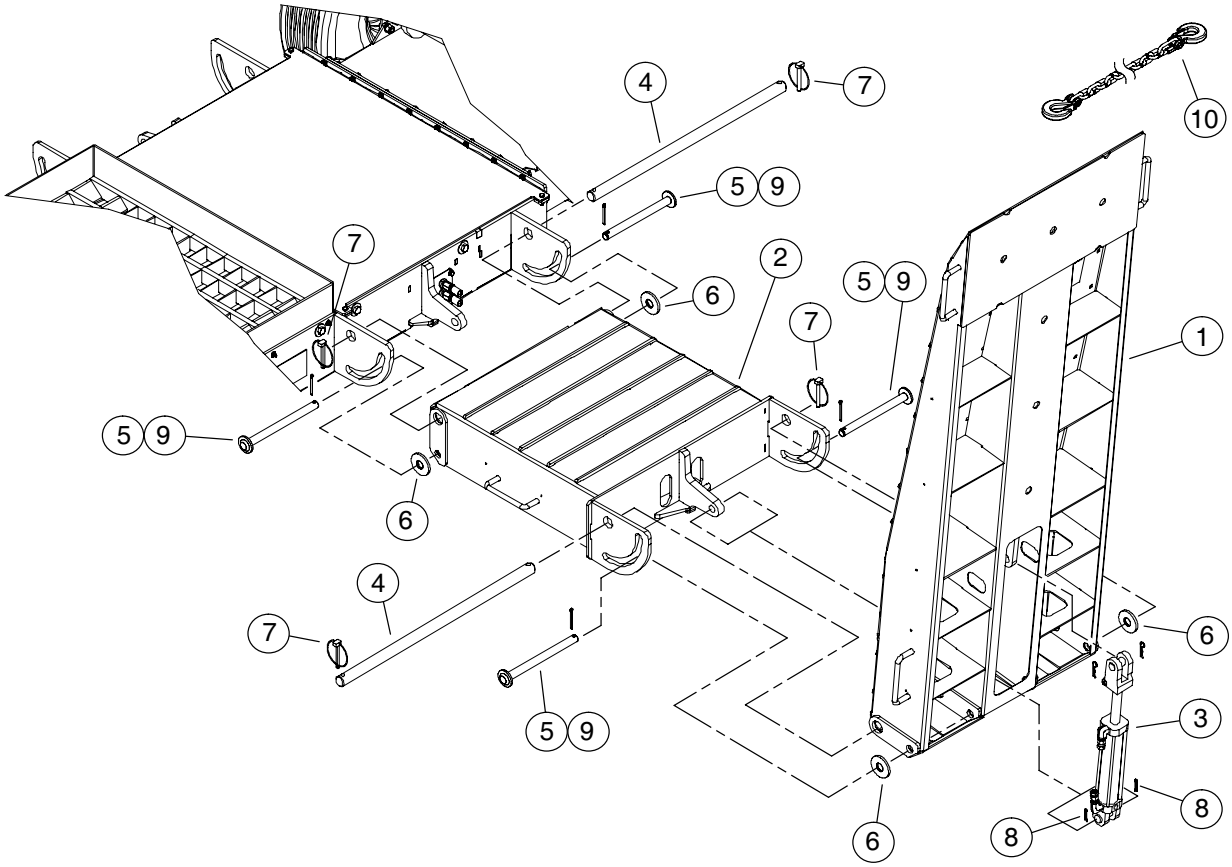

All parts listed are used on all four ramp and extension assemblies for the conveyor using the short ramp extensions.

Refer to the Hydraulic Components Parts List (Page P-8) for Fittings and Hoses used with the Hydraulic Cylinders.

Ref. No.	Part No.	Description
1	1041650	Ramp f/ Comm. Drive-Over
2	1041695	Extension, Short Ramp
3	1041669	Hydraulic Lift Cylinder, 2” bore x 8” stroke
4	1041665	Pin, Ramp, 1 1/2” dia. x 34 1/2” *(38 mm x 87.6 cm)* long
5	1044432	Pin Weldment (ramp stop)
6	D1160	Washer, 1” Flat PLTD
7	33364	Lynch Pin, 7/16”
8	D1146	Pin, 5/32” x 1 1/4” Cotter
9	D1263	Pin, 1/4” x 2” Cotter
10	1041810	Chain, Ramp Transport 128 9/16” *(3.27 m)* long

RAMP & LONG EXTENSION COMPONENTS

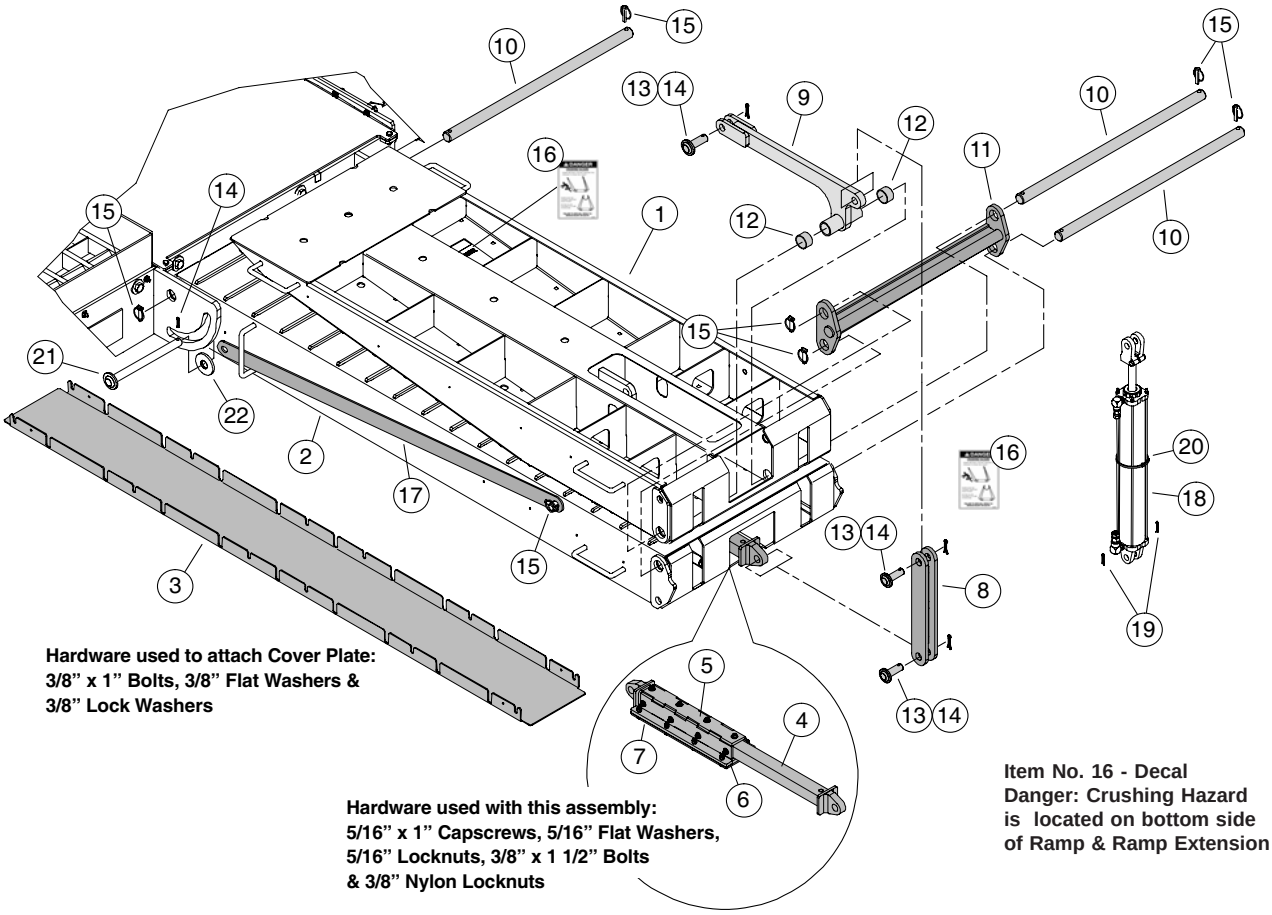

All parts listed are used on all four ramp and extension assemblies for the conveyor using the long ramp extensions.

The complete Long Ramp Extension can be obtained by ordering Part No. 1044424. The complete assembly includes items 2, 3, 4, 5, 6, 7 & 16.

Refer to the Hydraulic Components Parts List (Page P-8) for Fittings and Hoses used with the Hydraulic Cylinders.

Ref. No.	Part No.	Description
1	1041650	Ramp f/ Comm. Drive-Over
2	1041957	Extension Wldmnt., Long Ramp
3	1044423	Cover Plate, f/ Long Extension
4	1044416	Cylinder Extension Tube
5	1044364	Guide Strip f/ Long Extension
6	1044363	Spacer Plate f/ Long Extension
7	1044362	Plate, Flat Mount f/ Lng Extnsn.
8	1044409	Ramp Linkage Weldment
9	1044405	Cylinder Mount Extension
10	1041665	Pin, Ramp, 1 1/2" dia. x 34 1/2" *(38 mm x 87.6 cm)* long
11	1044411	Ramp Pin Weldment
12	1044410	Spacer f/ Ramp Pivot Weldment
13	1044587	Pin Weldment, 3 1/4" long
14	D1263	Pin, 1/4" x 2" Cotter
15	33364	Lynch Pin, 7/16"
16	1035676	Decal, Danger: Crushing Hazard
17	1044421	Transport Bar f/ Long Extension
18	1044581	Hydraulic Lift Cylinder, 3" Bore x 24" Stroke
19	D1146	Pin, 5/32" x 1 1/4" Cotter
20	1045501	Cable Tie, Heavy Duty
21	1044432	Pin Weldment (ramp stop)
22	D1160	Washer, 1" Flat PLTD

RAMP HYDRAULIC COMPONENTS

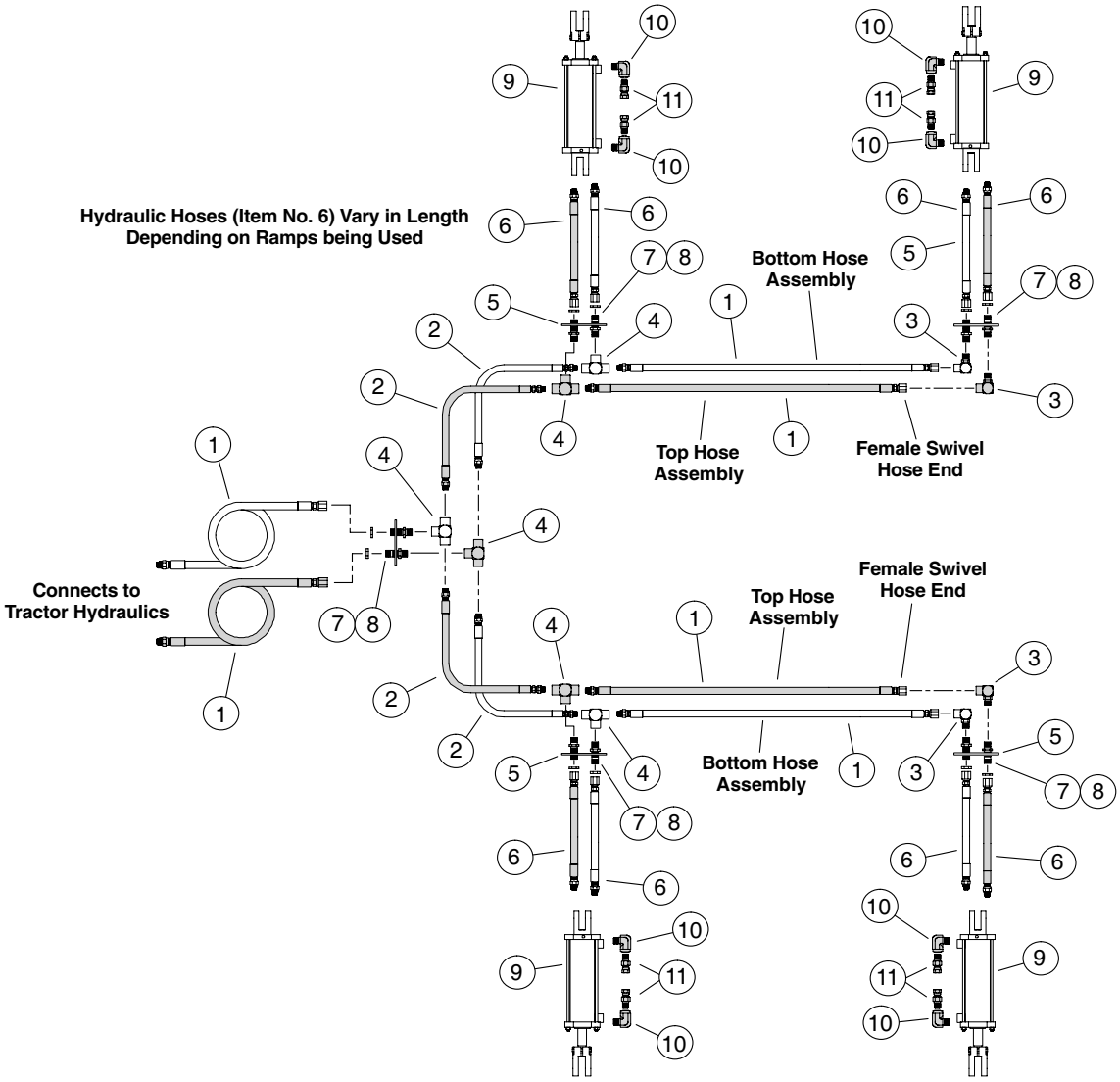

Ref. No.	Part No.	Description
1	1044607	Hydr. Hose 6'-10" *(2.08 m)* 1/2" NPT-F-S x 1/2" NPT-M-S
2	1044606	Hydr. Hose 3'-6" *(1.07 m)* 1/2" NPT-M-S x 1/2" NPT-M-S
3	106413	Elbow, Hydraulic 90° 1/2" NPT-M x 1/2" NPT-F
4	1040071	Hydr, Tee, 1/2" NPT-F
5	1044425	Bulkhead Plate, Removable
6	1044638	Hydr. Hose 1'-10" *(55.9 cm)* 1/2" NPT-F-S x 1/2" NPT-M-NS f/ ramps w/ no extensions
(6)	1044634	Hydr. Hose 4'-6" *(1.37 m)* 1/2" NPT-F-S x 1/2" NPT-M-NS f/ ramps w/ short extensions
(6)	1044608	Hydr. Hose 3'-0" *(91.4 cm)* 1/2" NPT-F-S x 1/2" NPT-M-NS f/ ramps w/ long extensions
7	1041284	Hydr. Bulkhead Fitting, 1/2" NPT
8	1041348	Locknut f/ Bulkhead Fitting
9	1041669	Hydr. Lift Cylinder, 2" bore x 8" stroke f/ No Ramp & Short Ramp Extensions
(9)	1044581	Hydr. Lift Cylinder, 3" bore x 24" stroke f/ Long Ramp Extensions
10	1044630	Hydr. 90° Elbow, 3/8" NPTM x 1/2" NPTF f/ No Ramp & Short Ramp Extensions
(10)	1040072	Hydr. 90° Elbow, SAE 8 M x 1/2" NPTF f/ Long Ramp Extensions
11	1032084	Restrictor, 1/2" ML-FM w/ .04 HI

PARTS LIST

ELECTRIC DRIVE COMPONENTS

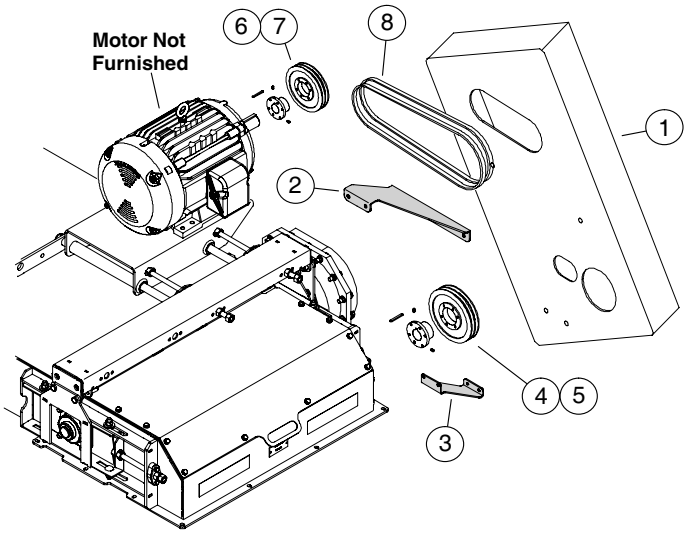

Ref. No.	Part No.	Description
1	1041793	Belt Guard f/ Comm. Dr Over
2	1041798	Support, Upper f/ Belt Guard
3	1041800	Support, Lower f/ Belt Guard
4	3075A1	Sheave, QD 9.4” 2-Belt
5	3188A1	Bushing, QD SK 1 1/8” Bore
6	3235A1	Sheave, QD 7.4” 2-Belt
7	3192A1	Bushing, QD SK 1 5/8” Bore
8	1023004	Belt, B-59

HITCH COMPONENTS

Ref. No.	Part No.	Description
1	1044518	Hitch f/ Comm. Drive-Over
2	1044593	Hitch Pin Weldment
3	33364	Lynch Pin, 7/16”
4	1042410	Screw Jack
5	1039988	Implement Hitch
6	1040146	Bolt, 1”-8 x 6 1/2”
7	1007943	Nut, 1”-8 Nylon Lock

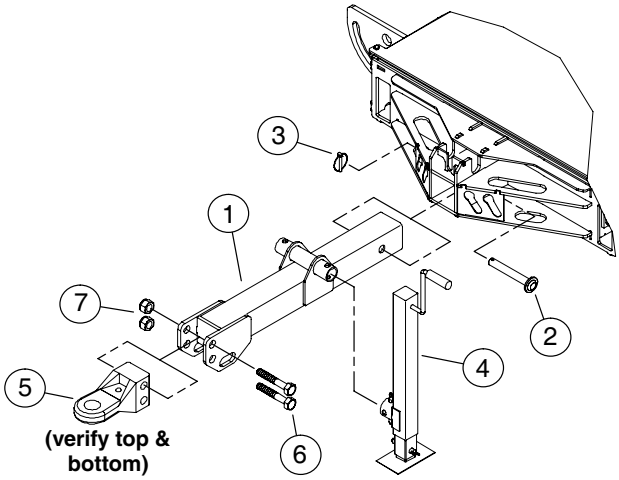

TIRE & RIM ASSEMBLY

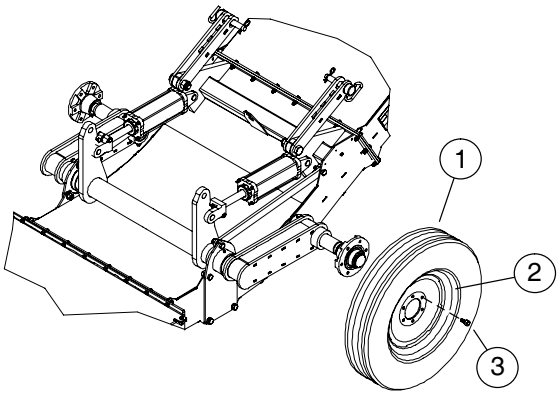

The Tire & Rim can be obtained as a complete assembly, Order Part No. 1026197

Ref. No.	Part No.	Description
1	1025913	Tire, 16” (235/85R16)
2	1025912	Rim, 16 x 6
3	106241	Lug Bolt, 1/2”-20 x 1”

Hutchinson/Mayrath

*A Division of **GLOBAL** Industries Inc.*

Hutchinson/Mayrath • P.O. Box 629 • Clay Center, KS. 67432
Ph. 785–632–2161 • Fx. 785–632–5964 • Toll Free 800–523–6993
www.hutchinson-mayrath.com