13” TOP DRIVE PORTABLE AUGERS
36’, 52’, 62’ & 65’ MODELS

OWNER’S & OPERATOR’S MANUAL

Effective November 1, 2016

Publication No. 1039135

This Manual is for Augers with Serial No’s. 959984 or Higher

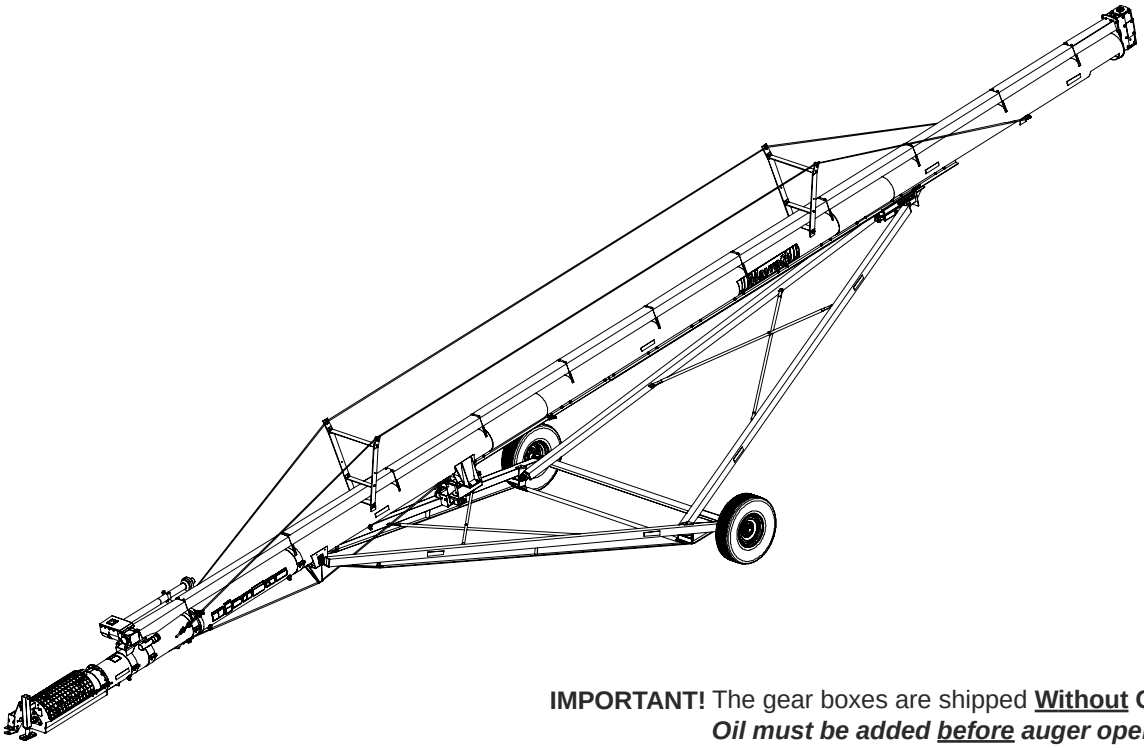

IMPORTANT! The gear boxes are shipped **Without Oil.**
Oil must be added before auger operation.
Refer to the Lubrication Section in this manual.

AGI HUTCHINSON MAYRATH

Hutchinson I Mayrath • P.O. Box 629 • Clay Center, KS. USA 67432

P 785.632.2161 • **F** 785.632.5964 • **TF** 800.523.6993

hutchinson-mayrath.com

aggrowth.com | AGI

HUTCHINSON | MAYRATH

POLICIES and PROCEDURES

Prices: Prices in effect at time of shipment will apply. Prices are subject to change without notice. All prices are F.O.B. Clay Center, Kansas. Orders shipped from locations other than Clay Center, Kansas will be subject to additional charges, such as back freight and/or additional freight.

Service Charge: A service charge will be assessed for all past due balances as permitted by state law not to exceed 1-1/2% per month.

Minimum Order: Processing and handling costs necessitate a minimum charge of $15.00 net on all orders.

Back Orders: Back orders will be shipped as they become available. Contact Hutchinson,Mayrath Customer Service for alternative shipping options or if cancellation is desired.

Damaged Goods: It is the consignee's responsibility to check all shipments thoroughly upon receipt of goods. If any damage is discovered, it must be noted on the freight bill of lading before signing. The consignee must make necessary claims against the respective freight line. All damage claims must be submitted within 30 days of delivery receipt.

Shortages: All shortages must be noted at time of delivery. Shortages must be noted on the freight bill of lading before signing. Hutchinson,Mayrath must be advised of all concealed shortages upon discovery. Once notified of concealed shortages Hutchinson,Mayrath will advise corrective action to be taken.

Return of Goods: All returns must be approved by Hutchinson,Mayrath prior to shipment. All return requests will be issued a return authorization number. NO RETURNS WILL BE ACCEPTED WITHOUT A RETURN AUTHORIZATION NUMBER AND PRIOR AUTHORIZATION FROM THE FACTORY. All returns must be shipped prepaid. A 15% restocking charge will be applied to all returned merchandise. Custom Products may not be returned for credit. Only current products in new and salable condition may be returned. No safety devices may be returned for credit.

Modifications: It is the policy of Hutchinson,Mayrath to improve its product whenever possible and practical to do so. We reserve the right to make changes, improvements and modifications at any time without incurring the obligation to make such changes, improvements and modifications on any equipment sold previously.

Limited Warranty: (a) For a period of (1) year after receipt of goods by the original consumer buyer, Hutchinson,Mayrath will supply free of charge replacement parts for parts that prove defective in workmanship or material. Defective parts must be returned freight prepaid to a specified Hutchinson,Mayrath location. Only Hutchinson,Mayrath original repair parts may be used for warranty repairs.
(b) This limited warranty does not extend to parts designed to wear in normal operation and be replaced periodically; or to damage caused by negligence, accident, abuse or improper installation or operation.
(c) GOODS NOT MANUFACTURED BY HUTCHINSON,MAYRATH CARRY ONLY THE MANUFACTURER'S WARRANTY.
(d) THIS UNDERTAKING IS IN LIEU OF ALL OTHER WARRANTIES, EXPRESSED OR IMPLIED, INCLUDING MERCHANTABILITY AND FITNESS FOR A PARTICULAR PURPOSE.

FAILURE TO FOLLOW THE INSTRUCTIONS CONTAINED IN THE OWNER'S & OPERATOR'S MANUALS AND THE ITEMS LISTED BELOW WILL RESULT IN THE VOIDING OF THIS LIMITED WARRANTY.

(1) Improper assembly, including failure to properly install all safety equipment.
(2) Improper installation.
(3) Unauthorized alternations of goods.
(4) Goods operated when obviously in need of repair.
(5) Use of unauthorized repair parts.
(6) Irresponsible operation.
(7) Used to handle materials other than free flowing, nonabrasive and dry materials, as intended.
(8) Damaged through abusive use or accident.

Limitation of Liability: BUYER AGREES THAT IN NO EVENT SHALL HUTCHINSON,MAYRATH HAVE LIABILITY FOR DIRECT DAMAGES IN EXCESS OF THE CONTRACT PRICE OF THE GOODS IN RESPECT OF WHICH CLAIM IS MADE. BUYER FURTHER AGREES THAT IN NO EVENT SHALL HUTCHINSON,MAYRATH ON ANY CLAIM OF ANY KIND HAVE LIABILITY FOR LOSS OF USE, LOSS OF PROFITS, OR FOR ANY INDIRECT, INCIDENTAL OR CONSEQUENTIAL DAMAGES.

TABLE OF CONTENTS

SAFETY

GENERAL SAFETY STATEMENT

This manual was written with the safety of the operator and others who work with the equipment as our prime concern. The instructions presented will help the reader learn **SAFE** day to day work practices. We want you as our partner in safety.

It is your responsibility as an owner, operator or supervisor to know what specific safety requirements and precautions exist and to make these known to all other personnel working with the equipment or in the area, so that they too may safely perform their duties and avoid any potentially hazardous situations.

We suggest the implementation of a Safety Program for all personnel that includes, but is not limited to, the proper use of PPE (personal protective equipment), Fall Protection Systems and Lock Out-Tag Out procedures.

Please remember safety equipment provides important protection for persons around a grain handling system that is in operation. Be sure **ALL** safety shields and protection devices are installed and properly maintained. If any shields or guards are damaged or missing, contact your dealer to obtain the correct items.

Avoid any alterations of the equipment. Such alterations may create a dangerous situation where serious injury or death may occur.

SAFETY ALERT SYMBOL

The safety symbol shown is used throughout this manual to alert you to information about unsafe actions or situations, and will be followed by the word DANGER, WARNING, or CAUTION.

DANGER - Indicates immediate hazards that may result in severe injury or death. **WARNING** - Indicates unsafe actions or situations that may cause severe injury, death and/or major equipment or property damage. **CAUTION** - Indicates unsafe actions or situations that may cause injury, and/or minor property damage.

Watch this symbol - it points out important safety precautions. It means - **ATTENTION! Become alert! Your safety and the safety of others is involved!** Read the message that follows the symbol when a warning is given, be alert to the possibility of personal injury or death.

BE ALERT!
YOUR SAFETY IS INVOLVED

Follow Safety Instructions

Carefully read all safety messages in this manual and safety signs on your machine. Check to ensure all Safety Decals are present and in good condition.

If a decal cannot easily be read for any reason, or has been painted over, replace the decal immediately. Safety decals are offered free of charge, and can be ordered through your Hutchinson/Mayrath dealer or directly from the factory.

Learn how to operate the machine and how to use controls properly.

Keep your machinery in proper working condition. Understand service procedures before doing work. Never lubricate, service or adjust machine while it is in operation.

Keep work area clean, dry and free from of all debris and tools which may cause accidental tripping or falling.

Read and Understand Manual

Understand Service Procedures

Keep Work Area Clean

Prepare for Emergencies

Keep emergency numbers for doctors, ambulance service, hospital and fire department near your telephone.

Keep a first-aid kit and fire extinguisher handy.

Be prepared if a fire starts

First Aid Equipment

Fire Extinguisher

Wear Proper PPE (Personal Protective Equipment)

Some materials can create flying debris when they are filed, cut or drilled. Safety glasses should be worn at all times to protect your eyes from such debris.

Hearing protection should be worn when operating power tools or other power equipment that could be harmful to your hearing.

Gloves should be worn to protect your hands from sharp metal and plastic edges, as well as providing protection from the handling of heavy objects.

Wear steel toe boots to protect your feet from falling debris.

Wear a hard hat to help protect your head from falling objects as well as from accidental bumping.

Use caution when working at elevations greater than four (4) feet *(1.22 m)* above the ground.

Use the appropriate fall protection equipment as set forth by OSHA guidelines and regulations.

A respirator may be needed to prevent breathing potentially toxic fumes and dust, especially when working within a grain bin or storage structure.


Eye & Hearing Protection


Gloves


Steel Toe Boots


Hard Hat


Fall Protection

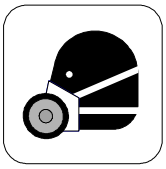
Respirator

Operate Electric Motor(s) Properly

Do not operate electric motor equipped units until motor(s) are properly grounded.

Know how to "Shutdown and Lockout" the power source. Shutdown and lockout power source before performing any service, maintenance or adjustments to the unit.

Disconnect power on electrical driven units before resetting motor overloads.


Lockout / Tagout


Electric Shock Hazard

Stay Clear of Moving Parts

Keep all shields, covers and safety devices in place at all times.

Entanglement in moving chains, rotating impeller arms and sprockets will cause serious injury or death.

Wear close fitted clothing. Keep hands, feet and clothing away from moving parts.

Shutdown and lockout power source before making adjustments, cleaning or maintaining the equipment.


Entanglement Hazards

GRAIN BIN SAFETY

The Top Drive Auger is generally designed to move grain into grain bins or other storage structures. **Be aware of the dangers inherent in grain bins.**

Consult the grain bin manufacturer's manual for information on the proper loading and unloading of the bins, structural stress analysis, adequate venting and important safety information.

WARNING! Do Not enter the bin if the grain has "Bridged" or has not flowed normally out of the bin, See Example's 1 & 2. The grain may suddenly break loose and bury resulting in suffocation.

Do Not enter the bin unless all power driven equipment has been shut down and locked out.

Never enter the bin unless monitored by another person.

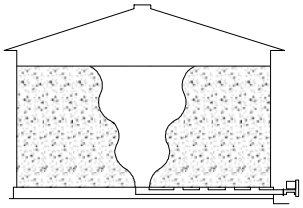

Example 1
(Abnormal Flow)

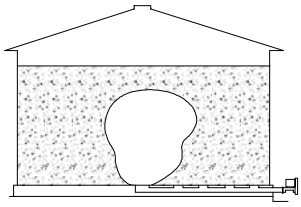

Example 2
("Bridging")

SAFETY DECALS

Check to ensure all Safety Decals are present and in good condition. If a decal cannot easily be read for any reason, or has been painted over, replace the decal immediately. Safety decals are offered free of charge, and can be ordered through your Hutchinson/Mayrath dealer or directly from the factory.

Refer to the Parts List Section for decal Part No's. and decal locations.

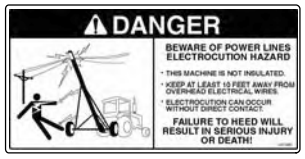

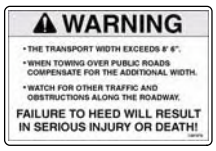

WARNING!
Anyone who will operate or work around this machine shall first read this manual! This manual must be delivered with the equipment to its owner. Failure to read this manual and its safety instructions is a misuse of the equipment.

OPERATOR QUALIFICATIONS

Operation of this auger shall be limited to competent and experienced persons. In addition, anyone who will operate or work around an auger must use good common sense. In order to be qualified, the operator must also know and meet all other requirements, such as:

1. Some regulations specify that no one under the age of 16 may operate power machinery. This includes this auger. It is your responsibility to know what these regulations are in your area or situation.
2. Current OSHA regulations state in part: "At the time of initial assignment and at least annually thereafter, the employer shall instruct every employee in safe operation and servicing of all equipment which the employee is, or will be involved with." *
3. Unqualified persons are to stay out of the work area. See "Designated Work Area" section.
4. A person who has not read and understood all operating and safety instructions is not qualified to operate the machine.
5. Person's operating, servicing or repairing equipment that requires above ground work shall be properly secured with the use of "fall protection" equipment as set forth by OSHA guidelines and regulations.

***Federal Occupational Safety & Health Standards for Agriculture Subpart D, Section 1928.57 (a) (6).**

SIGN-OFF SHEET

As a requirement of OSHA, it is necessary for the employer to train the employee in the safe operation and safety procedures with this auger.

We include this sign off sheet for your convenience and personal record keeping.

Training Sign-Off Sheet

Date	Employer Signature	Employee Signature

RIGHT and LEFT SIDE DESIGNATION

When referencing the left, right, front or rear of the unit, it is always determined by standing at the inlet end of the auger and looking towards the discharge end.

SERIAL NUMBER

To ensure efficient and prompt service, please furnish us with the model and serial no. of your auger in all correspondence or other in all other means of contact. The serial no. plate is located on the right side of the lower undercarriage mount.

MACHINE INSPECTION

Our augers are well made and we are proud of our line of equipment. We would like you, as our customer, to do your part in using caution and good judgement in using our equipment, as well as any other machinery.

After delivery of your new auger and/or completion of assembly and before each use, inspection of the machine is mandatory. This inspection should include, but not be limited to:

1. Check to see that all guards listed in the assembly instructions are in place, secured and functional. All shields on the PTO drive must rotate freely.
2. Check all safety signs (decals) and replace any that are worn, missing or illegible. Safety signs may be obtained free of charge from your dealer or ordered from the factory.
3. Check ***all*** fasteners; nuts, bolts, set screws etc. for tightness.
4. Check oil levels in gearboxes (See the Lubrication and Maintenance Section).
5. Check all hydraulic hoses, and fittings to ensure they are tight and not leaking hydraulic oil.

GENERAL AUGER INFORMATION

WARNING! During initial start-up and break-in period, the operator shall be aware of any unusual vibrations or noises that would indicate a need for service or repair.

Keep all safety shields and devices in place. Keep hands, feet, and clothing away from moving parts.

The operator should have a full view of the auger work area and check that all personnel are free from designated work areas before adding power.

- Obtain any needed replacement parts from your dealer and install ***before*** using the machine.
- It is important to become familiar with the routine operating procedures before attempting start-up.
- Inspect the drive before adding power and know how to ***shutdown*** in an emergency (See Pages 13 & 14).
- During operation of your auger, one person shall be in a position to monitor the operation.

General Information (con't.)

- Visually inspect the auger periodically during operation, be aware of all adjustments and checks which should be performed.
- ***Do Not*** attempt full load operation at low speeds, as high torque requirements may damage the auger.

BREAK-IN INFORMATION

Any auger when it is new, or after sitting idle for a season should go through a "break-in" period. The auger should be run at partial capacity until several hundred bushels of grain have been conveyed to polish the housing and flight. An auger that has not been polished in this manner requires greater horsepower to operate, and damage to conveyor can occur.

When the housing and flight has been polished and smooth, the auger can be run at full capacity. Never run an auger empty for any length of time as excessive wear will result. If at all possible, do not stop or start the auger under load, especially before the housing has become well polished, as this may cause the auger to "freeze-up."

IMPORTANT! The auger should be frequently checked and serviced to operate freely. Keep all guards and shields in place, replace any that are damaged or missing.

OPERATING CAPACITIES

The 13" augers have the ability to convey **7,500 Bushels Per Hour *(203 TPH)*** of reasonably dry grain during normal operating conditions.

Maximum possible capacity will be less with high moisture grain (above 15%) than with dry grain. Twenty-five percent (25%) moisture could cut capacity back by as much as 40% under some conditions.

The results or capacities of augers can vary greatly under varying conditions. Different materials, moisture content, amounts of foreign matter, angle of operation, methods of feeding and auger speed all play a role in the performance of the auger.

Overfeeding the auger would result in increased power requirements, extra strain on the driveline and possibly a complete stalling out. Under the "extra" grain pressure conditions, a control gate or other method of limiting the amount of grain being fed into the auger should be used.

LAYOUT & ASSEMBLY INFORMATION

For ease of assembly and locating hardware, the auger has been divided into two different groups (with the exception of the 36' models). These groups are; the main tube assembly and the undercarriage assembly.

The boxes of parts are separated so that each box contains the components and hardware needed to assemble that particular group.

For example: the main box of parts for the auger also includes the box(es) of parts containing the hardware and components that are necessary for assembly of the undercarriage group, and the box(es) of parts necessary to assemble just the main tube grouping.

Refer to Page P-1 for information on the box of parts for each auger group.

ELECTRIC DRIVE POWER REQUIREMENTS

WARNING! Shut off power and lockout whenever cleaning or servicing the auger.

The reset and starting controls must be located so that the operator has full view of the entire operation.

Disconnect power before resetting motor overloads.

Make certain electric motor is grounded.

Keep hands, feet and clothing away from moving parts.

Keep all safety shields and devices in place.

A main power disconnect switch that can be locked in only the "Off" position shall be provided. This shall be locked whenever work is being done to the auger.

Do Not enter the grain bin unless all power driven equipment has been shutdown and locked out.

The auger can be operated using an electric drive motor. Always use a motor with the required power recommended shown in the chart. Use a 60 hz motor that operates at 1750 RPM *(50 hz @ 1460 RPM).*

NOTE: Speeds greater than what is recommended can cause excessive wear and/or damage to the auger).

Recommended Auger Speed

The 13.6" driven sheave is provided with the 36' unit. We recommend a 4.2" P.D. motor sheave to obtain a maximum auger speed of 540 rpm (the 4.2" P.D. motor sheave is ***Not*** provided).

An 18.4" driven sheave is provided with the 52', 62' & 65' units. We recommend a 5.4" P.D. motor sheave to obtain a maximum auger speed of 514 rpm (the 5.4" P.D. motor sheave is ***Not*** provided).

Electric motors and controls shall be installed by a qualified electrician and must meet the standards set by the National Electric Code and all local and state codes.

A magnetic starter should be used to protect your motor when starting or stopping. It should stop the motor in case of power interruption, conductor fault, low voltage, circuit interruption and/or motor overload. The motor should then be restarted manually.

A main power disconnect switch that can be locked only in the "Off" position shall be provided. This shall be locked whenever work is being done to the auger.

Horsepower Recommendations for 13" x 36', 13" x 52', 13" x 62' and 13" x 65' Top Drive Models

Auger Length	Recommended Horsepower *(kW)*	Recommended Motor Sheave*
36'	25 hp (18.5 kW)	4.2" P.D. 4B
52'	30 hp (22 kW)	5.4" P.D. 5B
62'	40 hp (30 kW)	5.4" P.D. 5B
65'	40 hp (30 kW)	5.4" P.D. 5B

*** Motor Sheave *Not* provided**
P.D. = Pitch Diameter

Recommended Sheaves

13.6" driven sheave f/ 36', provided - 540 rpm max.
[13.6" Sheave @ 540 rpm's - 7500 BPH *(203 TPH)*]
4.2" P.D. drive (motor) sheave, *Not* provided

18.4" driven sheave f/ 52', provided - 514 rpm max.
[18.4" Sheave @ 514 rpm's - 7500 BPH *(203 TPH)*]
5.4" P.D. drive (motor) sheave, *Not* provided

18.4" driven sheave f/ 62', provided - 514 rpm max.
[18.4" Sheave @ 514 rpm's - 7500 BPH *(203 TPH)*]
5.4" P.D. drive (motor) sheave, *Not* provided

18.4" driven sheave f/ 65', provided - 514 rpm max.
[18.4" Sheave @ 514 rpm's - 7500 BPH *(203 TPH)*]
5.4" P.D. drive (motor) sheave, *Not* provided

TRACTOR & PTO REQUIREMENTS

The auger PTO was designed for use with a tractor that is capable of operating at 540 RPM's (speeds greater than this will cause excessive wear and/or damage to the conveyor).

NOTE: The PTO driveline furnished with the auger is equipped with a "Spring-Lok" coupler at the tractor end. This type of coupler is spring loaded and will fit the standard 1 3/8" x 6 splined PTO shaft from a tractor.

The PTO driveline is also equipped with a shear bolt at the tractor connection. The shear bolt protects the auger from damage should the auger become plugged or subjected to high loads. If this scenario should occur, the shear bolt would "shear off" causing the connection to the auger to suddenly stop (the tractor PTO will continue turning, but not the auger driveline). **Immediately shutdown the tractor and lockout before attempting to investigate the cause of the problem.**

Extra shear bolts are located in the operator's manual container. **Always use the same size and strength shear bolts (3/8-16 x 1" grade 8 PLT).**

The tractor should also be equipped with an adjustable drawbar, the proper horsepower required for the size of auger being used and have a hydraulic control circuit capable of producing 1400 to 1500 PSI for the hydraulic winch used for raising and lowering the main auger (See chart below for minimum pressure requirements).
PTO operating @ 540 rpm's from tractor = 540 rpm's max. auger speed - 7500 BPH *(200 TPH)*

Auger Size	13" x 36'	13" x 52'	13" x 62'	13" x 65'
Tractor Hydraulic for Auger Lift	1500 PSI *(10342 kPa)*	1500 PSI *(10342 kPa)*	1500 PSI *(10342 kPa)*	1500 PSI *(10342 kPa)*
Approx. PTO Horsepower	50 HP *(37.2 kw)* min.	60 HP *(45.0 kw)*	75 HP *(55.9 kw)*	75 HP *(55.9 kw)*

PTO DRIVELINE/TRACTOR CONNECTION

Keep PTO Driveline as Horizontal as Possible

Some bin site applications may have the tractor and auger on unlevel ground, or both may be positioned at different levels. It's important to align the tractor so the PTO driveline is as horizontal as possible (See illustration below).

***Do Not* operate the PTO at severe angles. Damage to the PTO and/or auger can occur.**

The tractor axle should also be parallel (at a 90° angle) with the side of the auger when connection is made.

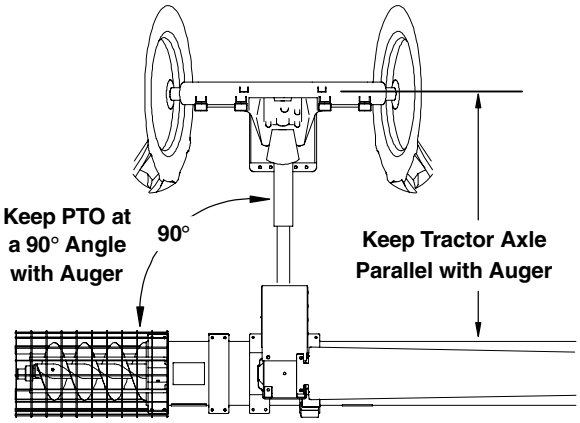

Shown as Reference Only

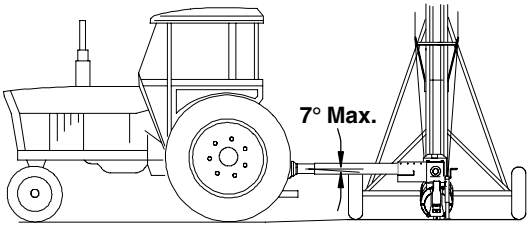

Keep PTO Driveline in a Straight a Line as Possible

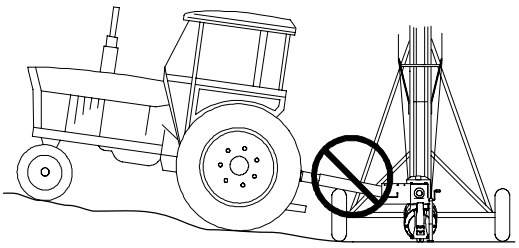

Do Not Operate at Severe Angles

ATTACH AUGER to TOWING VEHICLE

WARNING! Never stand between the tractor and auger when hitching or unhitching, unless the controls are in neutral and the brakes are locked.

Never allow persons to stand underneath or ride on the auger as it is being transported.

Never raise the hitch end higher than necessary to attach to the towing vehicle (weight transfers rapidly to the discharge end as the hitch end is being raised, particularly when the auger is in the raised position.

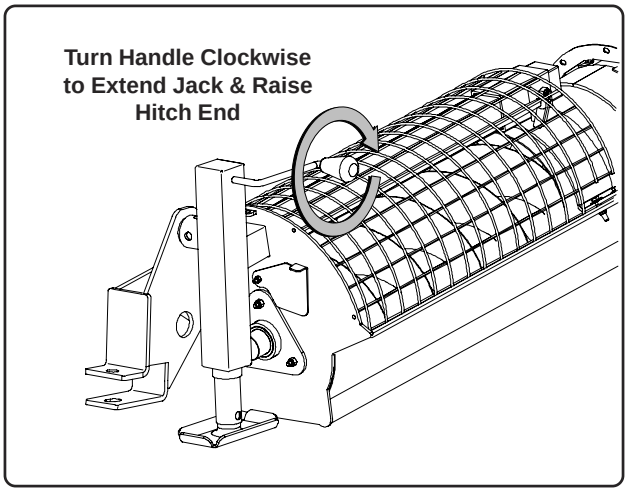

Fig. 1

1. The hitch jack is intended to lift the intake end of the auger for hitching and unhitching purposes. Depending on the position of the auger (raised or lowered) the jack needs to be as vertical to the ground as possible when being used.

   Remove the pin and rotate jack accordingly. Reinstall and secure the pin once the jack is positioned.

   Crank the jack winch handle clockwise to extend the jack. **Raise the intake end of the auger only high enough to allow connection to the drawbar of the toeing vehicle.**

2. Secure the auger hitch to the tractor drawbar with hitch and clevis pin (a bolt, flat washers and nuts can also be used, just make sure hitch is securely attached).

An auxiliary attachment system (safety chain) is required when transporting on public roads. Its function is to retain the connection between the towing and towed machines in the event of separation of the primary attachment system.

3. **Fasten one end of a safety chain (not furnished) to the drawbar on the towing vehicle and loop the other end through the opening above the hitch plates (See illustration below).**

   A clevis or similar type of intermediate support for the chain should be fastened to the drawbar no farther than 6" *(15.2 cm)* from the hitch pin (See illustration below).

   Once auger is attached to towing vehicle, raise the jack stand to the appropriate transport position.

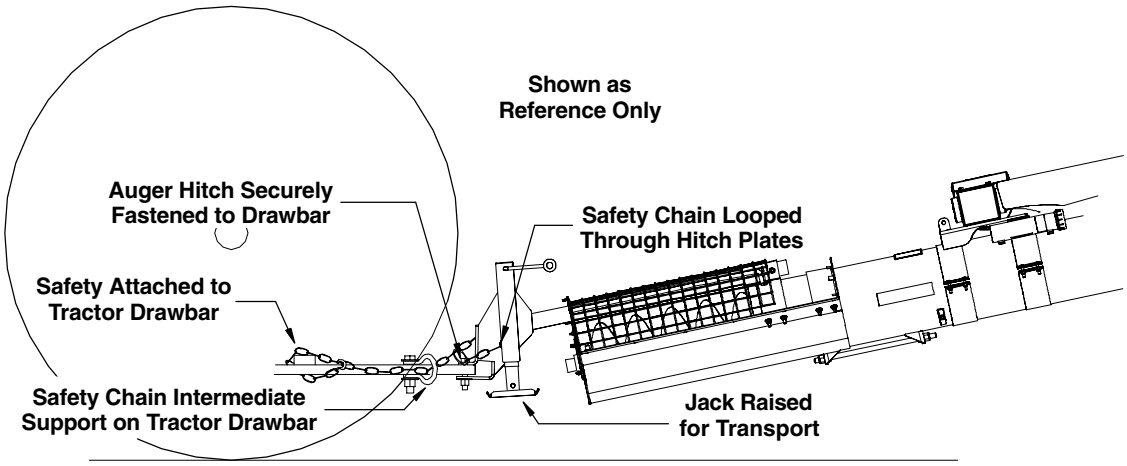

PLACEMENT of AUGER for FILLING GRAIN BIN

CAUTION! Make sure entire area above auger and the path of travel is clear of overhead obstructions and electrical wires. Failure to do so can result in electrocution (maintain at least 10 feet *(30.5 m)* of clearance from power lines, *electrocution can occur without direct contact of the power lines*).

To prevent tip-over when backing, avoid rolling over any obstructions and avoid steep slopes. If the auger is to be set on a slope, approach the bin uphill. Avoid moving the auger at right angles to a slope.

Make sure everyone is clear of the work area when moving the auger.

Keep hands clear of the winch drum when winch is in operation.

- Auger should be placed on as level a surface as possible (the wheels must be allowed to roll freely as the auger is being raised).
- When positioning the auger into its working position, make sure to leave adequate room for the loaded vehicles to reach the inlet hopper.

STEP 1: Locate Auger Next to Bin

1. Move the auger into its working position with a towing vehicle (See Fig. 2). Locate the auger as close as possible to the bin, or other storage structure **(move auger slowly towards the bin with the towing vehicle - not by hand).**

STEP 2: Raise Auger

WARNING! Hydraulic systems are highly pressurized. Do Not connect or disconnect hydraulic components when there is pressure in the system.

Escaping hydraulic oil, even an invisible pinhole leak, can penetrate body tissues and cause severe injury.

If injured by hydraulic oil escaping under pressure, see a doctor at once. Serious infection or reaction may occur if medical attention is not received immediately.

2. Connect the hydraulic hoses from the auger winch to the tractor and raise the discharge end of the auger high enough to clear the top of the bin. **Keep hands clear of the winch drum when winch is in operation.**

   Electric Winch Models: Connect winch to power source and raise discharge end of auger high enough to clear the top of the bin.

   IMPORTANT! Observe the cable as it is winding onto the winch drum. The cable should roll up on the drum evenly, avoid cable buildup on one side of the drum.

   ***Do Not* block or restrict the movement of the tires. The wheels must be allowed to roll freely as the auger is being raised.**

3. Check to make sure the auger discharge spout remains high enough to clear the top of the bin.

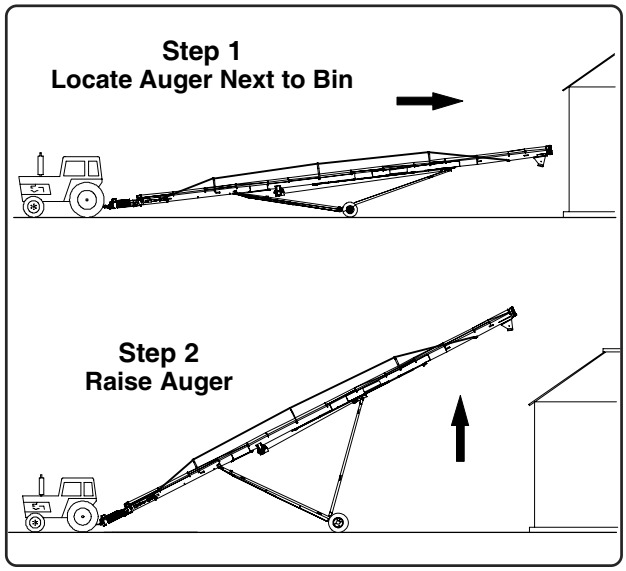

Fig. 2

STEP 3: Back into Position

4. Back the auger slowly into working position with the towing vehicle. **Never move the auger by hand, always use a vehicle.**

   ***Do Not* attempt to increase auger height by positioning its wheels on lumber, blocks or any other means to raise its height.**

5. Continue backing the auger until the discharge spout is directly over the bin opening **(when positioning the discharge over the bin opening, keep in mind that the discharge end will lower a few inches as the auger fills with grain). When discharging into a grain spreader, maintain at least 12" *(30.5 cm)* of space between the discharge and the spreader.**

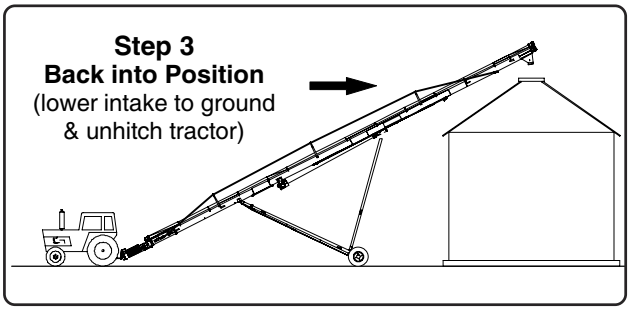

Fig. 3

WARNING! Never stand between the tractor and auger when hitching or unhitching, unless the controls are in neutral and the brakes are locked.

6. Position the hitch jack vertical to the ground. Raise the inlet end just high enough to remove the hitch weight from the tractor drawbar. Remove safety chain and tractor hitch pin.

   If hydraulic hoses were attached for winch operation, make sure they are disconnected before moving the tractor from the area.

   Electric Winch Models: Disconnect the power source and secure electrical cords to auger so they cannot become damaged during auger operation.

   NOTE: It is good practice to secure the discharge end of the auger to the bin or storage structure to prevent possible wind damage (remember to disconnect any tie-downs and/or anchors before moving the auger away from the bin).

7. Lower the inlet hopper to the ground and check discharge spout position. If necessary, reposition and/or lower auger so spout is directly above opening when intake is resting on the ground.

STEP 3: Back into Position (con't.)

8. Chock the auger wheels to prevent the auger from rolling. Disconnect tractor from auger.

9. Make sure all safety guards are in place before beginning grain transfer operations.

RELOCATION of AUGER

When grain conveying is completed, the auger should be moved away from the bin and lowered. It can then be moved to a different bin for more conveying operations, or it can be cleaned-up for storage.

CAUTION! Never stand between the tractor and auger when hitching or unhitching, unless all controls are in neutral and the brakes locked.

Never raise the intake end higher than necessary to attach to a towing vehicle. Weight is transferred rapidly to the discharge end when the intake is raised, especially when auger is in the raised position.

STEP 1: Raise Auger

1. Empty all grain from the auger and clean up the work area.
2. Untie any anchors and/or supports that were used to help secure the conveyor.
3. Disconnect the PTO driveline and place driveline into the storage/transport bracket and secure for transport.
4. Using the hitch jack, raise the inlet end just high enough to attach the hitch to the tractor drawbar and install the safety chain (See Page 7 for safety chain information). Raise jack to transport position.

   Connect the hydraulic winch hoses to the tractor's hydraulic system.

   Electric Winch Models: Connect power source to the winch.

5. Remove the wheel chocks and raise conveyor until the discharge spout clears the top of the bin.

TRANSPORTING AUGER

Relocation of Auger (con't.)

6. Once auger is ready, move the auger slowly away from the grain bin with the towing vehicle. **Never attempt to move auger by hand, always use a vehicle.**

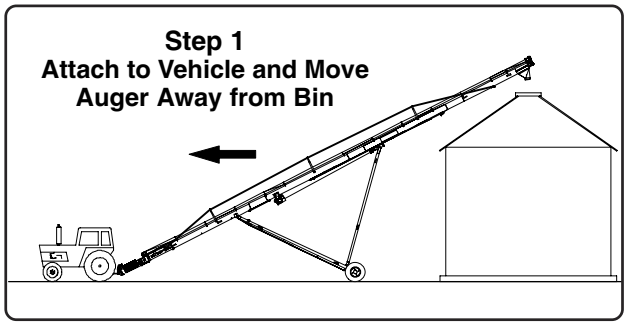

Fig. 4

STEP 2: Lower Auger

7. Immediately after the auger has cleared the bin or storage structure, lower the auger to its full down position.

   IMPORTANT! Lower the auger to its full down position even if only relocating to another bin or storage structure.

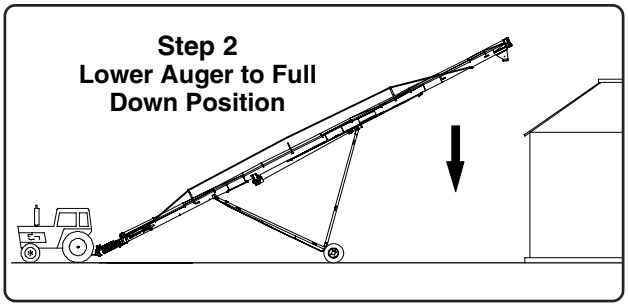

Fig. 5

STEP 3: Move to Next Bin or Storage

8. Disconnect and secure the hydraulic winch hoses (or electrical power source) and secure hoses or electrical cords so they will not become damaged during transport.
9. Move auger to next bin or storage site, or prepare the auger for storage (the auger should be stored in its full down position).
10. Follow the machine inspection recommendations on Page 4 before operating auger again.

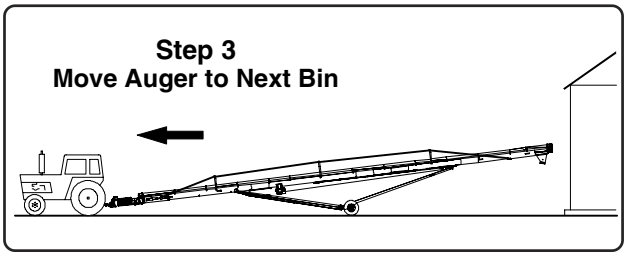

Fig. 6

AUGER MOVING HAZARD AREA

WARNING! Before moving the conveyor, the operator should make sure all personnel are clear of the "Moving Hazard Area" as shown in the diagram below.

Never allow persons to ride on the conveyor while it is being transported.

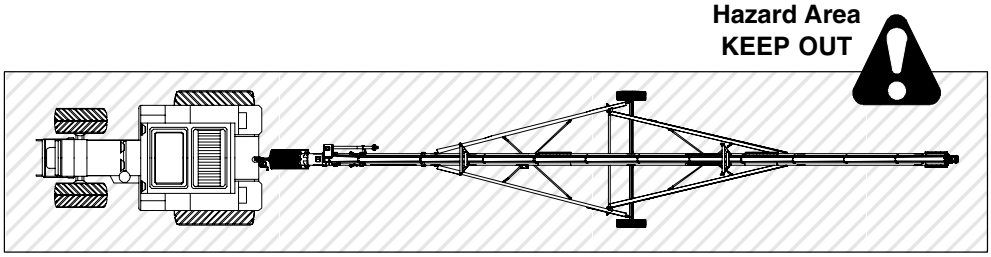

The shaded represents the area to stay clear of.

TROUBLE SHOOTING

LOW CAPACITY

- The auger may not be getting enough grain. Check to see that the intake screen has not bridged over restricting the flow.
- Auger speed is too slow.
- Grain is high in moisture. A low capacity will likely be achieved with high moisture grain. Excessive feeding of high moisture grain can cause plugging.

AUGER PLUGS

- The auger may be getting too much grain where it is "jamming" inside the housing. Adjust the feeding of the auger to allow less grain to enter while maintaining full speed.
- Is the auger free of any foreign material such as, tarp corners etc. A plug at the discharge end will cause an auger to plug.
- Frequent starts under load. Allow auger to clean out before shutting down.

EXCESSIVE CONVEYOR NOISE

- Damage may have occurred to the auger flight, thus causing the noise. Damage usually occurs because of foreign material having been run through the auger. It may be necessary to remove the flight for inspection.

AUGER LOWERING BY ITSELF

- Check all hydraulic fittings, hoses and connections for leaks.

AUGER WILL NOT RAISE OR LOWER

Hydraulic Winch

- See if the hydraulic coupler is properly attached to the tractor and the tractor reservoir is full of oil. The tractor pressure may be too low.
- A hydraulic pressure by-pass valve is located on the hydraulic motor on the winch. If the auger is full of grain and will not raise, the hydraulic pressure required to raise the auger may exceed the limit of the valve.

Electric Winch

- Make sure power source is connected and motor is wired correctly.
- Check cable making sure it is routed properly.
- Ensure belts are not slipping or damaged. Tighten or replace as necessary.
- Make sure sheaves and keys are properly installed.

DESIGNATED WORK AREA

WARNING! Under no circumstances should persons not involved in the operation be allowed to trespass into the work area.

It shall be the duty of all operator's to see that children and/or other persons stay out of the work areas. Trespassing into the work area by anyone not involved in the actual operation, or trespassing into a hazard area by anyone shall result in immediate shutdown by the operator.

It shall be the responsibility of the operator's to see that the work area has secure footing, is clean and free of all debris and tools which might cause accidental tripping and/or falling. It shall also be their responsibility to keep the work area clean and orderly during the operation.

Before starting the auger a designated work area should be established and properly marked. The following diagram shows the manufacturers designated work area for auger operation.

These areas shall be marked off with colored nylon or plastic rope or banners hung as portable barriers to define the designated work area.

All operators shall know how to shutdown and lockout the equipment in the event of an emergency. Refer to Pages 13 & 14 for shutdown and lockout procedures.

Designated Work Area

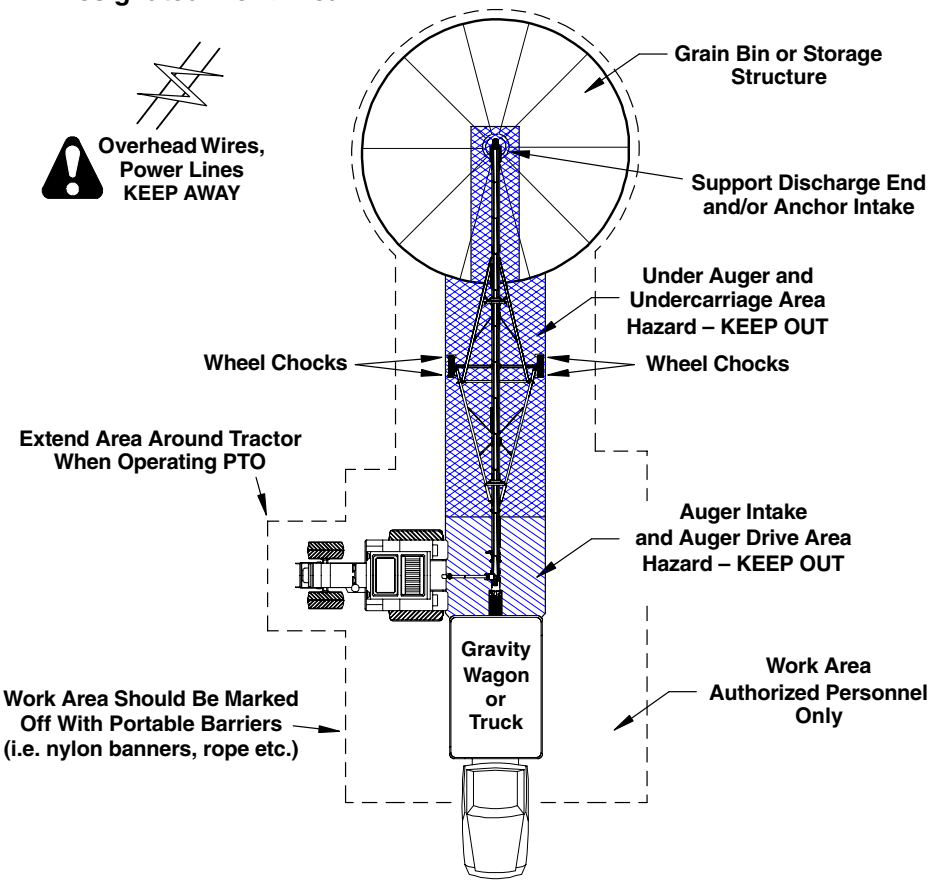

Be cautious of slippery surfaces.
Make sure area is clear of tools, debris, or other items that may trip you or create a hazardous situation.
When working in areas above ground, use appropriate fall protection equipment as set forth by OSHA guidelines and regulations.

OPERATING PROCEDURES (ELECTRIC DRIVE MODELS)

WARNING! The operator shall be aware of any unusual vibrations, noises and the loosening of any fasteners.

Keep all safety shields and devices in place.

Keep hands, feet and clothing away from moving parts.

The operator shall have a full view of the auger work area and check that all personnel are clear of hazard areas before adding power.

A main power disconnect switch that can be locked in only the "Off" position shall be provided. This shall be locked whenever work is being done to the auger.

The reset and starting controls must be located so that the operator has full view of the entire operation.

Disconnect power before resetting motor overloads. Make certain electric motor is grounded.

Shut off power and lockout whenever cleaning or servicing the auger.

Check the following before adding power:

- All safety devices are in place and properly fastened.
- Drive belts are properly tightened and in good condition, Replace belts if they are cracked, frayed, or damaged in anyway.
- Check electrical cords to ensure they are in good condition. Replace if necessary.
- Check electric power box and controls. Verify the power source can be locked out.
- Ensure auger is properly positioned and work area is appropriately marked and free of tools, debris and other hazards.
- Verify all drive component hardware and fasteners are tight, i.e. motor mount, pulleys, setscrews etc.

Begin Grain Conveying Operations

1. Start the electric motor and check to make sure auger is running properly.
2. Slowly begin filling the intake end with grain until desired flow rate is achieved.

ELECTRIC DRIVE SHUTDOWN/LOCKOUT

WARNING! If the operator must leave the work area, or whenever servicing or adjusting, the auger must be stopped and the power source turned off and locked out.

Precaution should be made to prevent anyone from operating the auger when the operator is away from the work area.

Emergency Shutdown

Should the auger be immediately shutdown under load, **disconnect and lockout the power source.**

Clear as much grain from the intake area and auger as you can.

When as much grain as possible has been cleared from the intake area, reconnect the power source and clear the auger gradually.

Never attempt to restart auger when full of grain. Starting the unit under load may result in damage to the auger, such damage is considered abuse and is not covered by warranty.

Normal Shutdown

Make certain that the intake area and the auger are empty before stopping the unit. **Before the operator leaves the work area, the power source shall be locked out** (See "Lockout" below).

Intermittent Shutdown

When an auger is stopped and restarted under full load, it may result in damage to the auger and/or its components. Therefore if intermittent operation is to be carried out, it is advisable to reduce the load level.

When kept from absolute filling, auger start-up is easier and operation more efficient.

Lockout

The power source for electric units shall have a main disconnect box that can be locked only in the "Off" position. **That is what "shutdown and lockout" refers to - Shut off the main power source and lock the handle or breaker switch in the "Off" position.**

OPERATING PROCEDURES (PTO DRIVE MODELS)

WARNING! The operator shall be aware of any unusual vibrations, noises and the loosening of any fasteners.

Keep all safety shields and devices in place.

Keep hands, feet and clothing away from moving parts.

The operator shall have a full view of the auger work area and check that all personnel are clear of hazard areas before adding power.

Shut off power and lockout whenever cleaning or servicing the auger.

Before starting tractor, be certain power to the PTO is off. Be certain the PTO driveline is securely attached to the auger and tractor.

Use a PTO with a rotating shield in good working condition that can be turned freely on the shaft.

Stay out of designated hazard area of an operating PTO.

Check the following before adding power:

- All safety devices are in place and properly fastened.
- Make sure tractor is parallel to auger with PTO driveline as horizontal as possible.
- Ensure auger is properly positioned and work area is appropriately marked and free of tools, debris and other hazards.
- Verify all drive component hardware and fasteners are tight.

Begin Grain Conveying Operations

The PTO drive models were designed for use with PTO's that provide up to 540 rpm's.

1. Engage PTO at a slow RPM to minimize shock loads, then work up to recommended RPM. Make sure auger is running properly.

   The auger can be operated at speeds from 400 to 540 RPM's. ***Do Not* attempt full load operation at speeds below 400 RPM as high torque requirements may damage the auger.**

2. Slowly begin feeding inlet section with grain until desired flow rate is achieved.

PTO DRIVE SHUTDOWN/LOCKOUT

WARNING! If the operator must leave the work area, or whenever servicing or adjusting, the auger must be stopped and the power source turned off and locked out.

Precaution should be made to prevent anyone from operating the auger when the operator is away from the work area.

Emergency Shutdown

Should the auger be immediately shutdown under load, **disconnect and lockout the power source.**

Clear as much grain from the inlet section and auger as you can. When as much grain as possible has been cleared, reconnect the power source and clear the auger gradually.

Never attempt to restart auger when full of grain. Starting the unit under load may result in damage to the auger, such damage is considered abuse and is not covered by warranty.

Normal Shutdown

Make certain that the intake screen/inlet hopper and auger are empty **before** stopping the unit. **Before the operator leaves the work area, the power source shall be locked out** (See "Lockout" below).

Intermittent Shutdown

When an auger is stopped and restarted under full load, it may result in damage to the auger. Therefore if intermittent operation is to be carried out, it is advisable to reduce the load level.

When kept from absolute filling, auger start-up is easier and operation more efficient.

Lockout

Stop PTO and turn off power source. Remove ignition key from power source (if this is not possible, remove the PTO driveline from the work area).

GENERAL MAINTENANCE INFORMATION

WARNING! Shut off power and lockout before attempting to adjust, service, clean or repair the auger or any of its components.

Keep hands, feet and clothing away from moving parts.

Make sure all safety devices, shields and guards are in place and functional. Immediately replace any that are damaged or missing.

Never rely solely on mechanical or hydraulic jacks for support. Use jack stands or equivalent for support.

Never operate the auger with access doors or panels open.

WARNING! Hydraulic systems are highly pressurized. Do Not connect or disconnect hydraulic components when there is pressure within the system.

Escaping hydraulic oil, even an invisible pin hole leak can penetrate body tissues and cause serious injury.

Use a piece of wood or cardboard when searching for leaks, Never use your hands or other parts of your body.

If injured by hydraulic oil escaping under pressure, see a doctor immediately. Serious infection or reaction can occur if medical attention is not received at once.

For economical and efficient operation of your auger, maintain regular and correct lubrication, maintenance and service schedules. Neglect leads to reduced efficiency, excessive wear and needless down time.

Any parts needing replacement should be replaced with parts of the same type and size. ***Do Not* modify or alter any of the auger components.**

NOTE: It is recommended to apply an anti-seize compound to all shaft to coupler connections, all flight to flight connections, hub to axle spindles, PTO driveline to gearbox shaft, and all sheaves to motor shafts.

Applying anti-seize will make disassembly easier should any parts require replacement or repair.

BEARING LUBRICATION INLET SCREEN BRONZE BEARING

The intake screen has a bronze bearing that supports the flight shaft. The bearing does not require any lubrication, but may over time begin to wear. This can cause the bearing to become oval shape or the bearing may begin to spin within the bushing. If necessary, remove the worn bearing and install a new one.

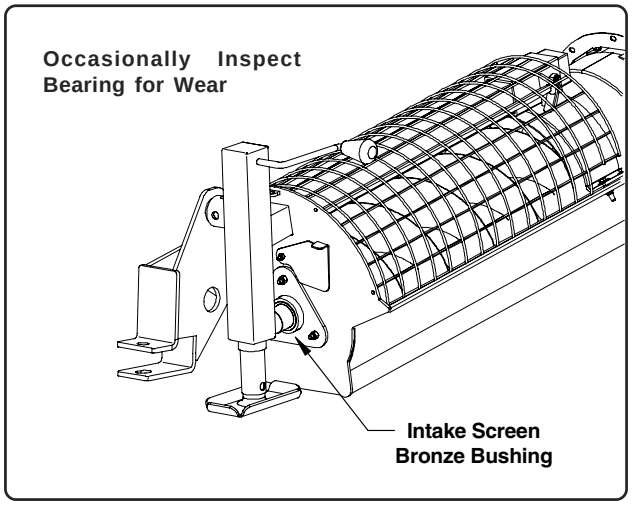

Fig. 7

BEARING LUBRICATION DRIVE SHAFT BALL BEARINGS

The main drive shaft bearings are a self-aligning sealed bearing. They have been packed with grease at the factory and require no further lubrication.

There is no adjustment to be made to the bearing, but check to make sure it is firmly fastened. Also check that the setscrews securing the lock collar to the shaft are tight.

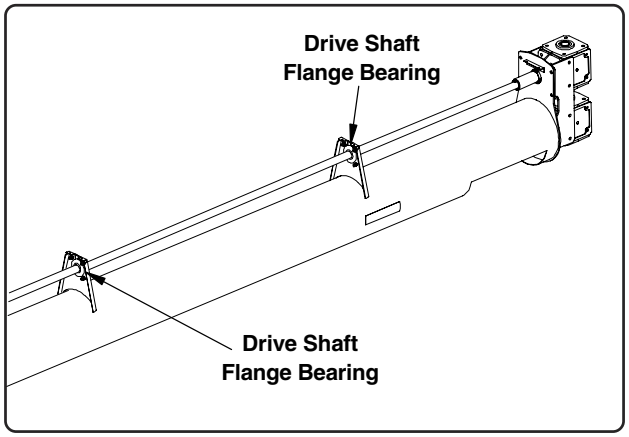

Fig. 8

GUARDS

Check all guards to see that they are properly adjusted and securely fastened. This includes guards on the electric and hydraulic winch as well as electric drive components, drive shafts and head gearbox.

Also check to make sure the intake screen is in place and secure.

When properly adjusted, there should be no moving parts such as, drive belts, drive shafts, sheaves or the PTO driveline rubbing against the guards.

Immediately replace any worn or damaged guards.

UNDERCARRIAGE AXLE BEARINGS

WARNING! Do Not rely solely on hydraulic or mechanical jacks for support. Use jack stands or equivalent to support undercarriage axle.

Tapered roller bearings are standard on all auger axles and should be **repacked with grease annually, or as needed determined by usage.**

Use an anti-seize compound on the hub to axle spindle connection.

To Repack Wheel Bearings:

1. Raise the undercarriage axle high enough to allow the tire to clear the ground **(only raise one side of the axle at a time).**

   Place jack stands or equivalent beneath the axle for support and remove the tire.

2. Remove the dust cover by prying around the edges, (See Fig. 9) then remove the cotter pin, slotted nut and flat washer from the end of the axle shaft.

3. Carefully remove the hub from the shaft being careful so the outer bearing doesn't fall to the ground. Clean the bearing with solvent and inspect the bearing for wear and damage, replace if necessary.

   To inspect the inner bearing you will need to remove the seal from the rear of the hub (the seal may become damaged during this procedure, replace as necessary).

   With the seal removed, you can now remove the inner bearing from the hub. Clean the bearing with solvent and inspect it for wear and damage. Replace if necessary.

4. Clean the hub cavity with solvent before reassembly. Using a good **automotive type axle grease,** repack the inner bearing. Insert the inner bearing into the hub and press on the grease seal.

5. Reinstall the hub onto the axle shaft being careful not to damage the lip of the seal during installation.

6. Repack the outer bearing. Fill the hub cavity with grease until about 1/3 full, then install the outer bearing.

7. Reinstall the flat washer and the slotted nut. Tighten the nut to seat the bearings. Keep tightening the slotted nut until the hub begins to bind as it is being rotated. Back off the slotted nut to the next slot and install a new 5/32" x 1 3/4" cotter pin. Reinstall the dust cap and remount the tire.

   Repeat this procedure on the opposite wheel hub.

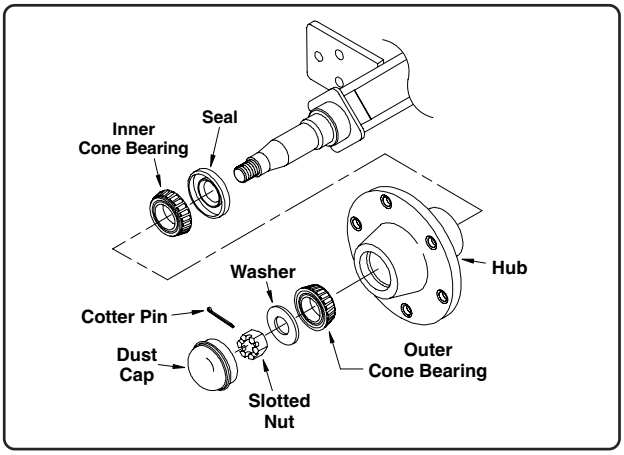

Fig. 9

ELECTRIC DRIVE BELT ADJUSTMENT

All belts need to be checked and adjusted periodically to ensure all belt driven components are performing properly. Belt tension must be sufficient to avoid any slipping or abnormal wear during auger operation.

Check to see that correct alignment of the sheaves is maintained. Check that all sheaves are secured to their shaft, drive key is in place and setscrews are tight.

1. Note the two 3/4" nuts securing the threaded rods to the motor mount plate (See Fig. 10). Adjust these nuts to obtain proper belt tension. Make sure to adjust the nuts equally to keep the motor and drive sheaves properly aligned. **Do Not overtighten.**

   Proper belt tension is approx. 9/16" *(14 mm)* of deflection per belt when using 7.50 lbs. of force at the center of the span between the two sheaves.

   After 24 hours of operation, and for the remainder of belt life, deflection should be 9/16" (14 mm) using 4 to 4.50 lbs. of force. If you do not have a weight set to apply recommended amount of force, a fish scale is a good alternative.

ELECTRIC DRIVE BELT ADJUSTMENT (con't.)

Tension can also be checked by pressing firmly on the belts at the center of the span between the two sheaves.

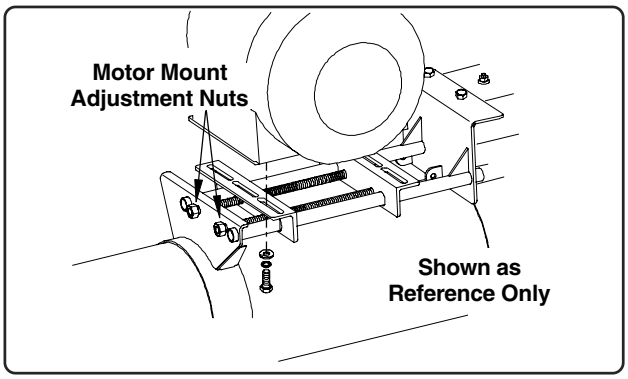

Fig. 10

Do Not overtighten the belts. Overtightening creates high stress on the belts and auger components and can result in damage to the belts and/or auger.

HYDRAULIC COMPONENTS

The hydraulic components received with your Top Drive auger were selected to deliver the most efficient and economical use during operation.

Any parts used for replacement should be parts of the same type and size as the original.

WARNING! Hydraulic systems are highly pressurized. Do Not connect or disconnect hydraulic components when there is pressure within the system.

Escaping hydraulic oil, even an invisible pin hole leak can penetrate body tissues and cause serious injury.

Use a piece of wood or cardboard when searching for leaks, Never use your hands or other parts of your body.

If injured by hydraulic oil escaping under pressure, see a doctor immediately. Serious infection or reaction can occur if medical attention is not received at once.

- Allow hoses to coil in their original shape. Avoid pinching, crimping or twisting the hoses that would otherwise restrict the flow of the hydraulic system.

  IMPORTANT! Keep hydraulic hoses away from moving parts. Make sure to secure the hoses in a manner that they cannot become damaged when transporting the auger.

- Check hoses, fittings and connectors for leaks. Repair or replace as necessary.
- When not in use, make sure the fittings on the end of the hoses are protected from dirt and other contaminants.
- The fittings required for attaching the hoses to the tractor are not furnished. **Two (2) 1/2" NPT female fittings are needed for attaching the tractor fittings to the hose ends.**

Hydraulic Operated Winch

The winch is shipped **with oil already installed.**

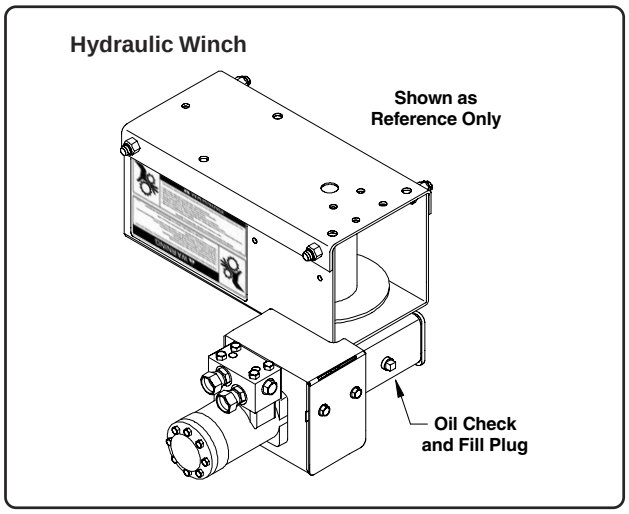

Fig. 11

Refer to the following instructions for adding oil when the winch is mounted onto the auger.

1. Place the auger in as horizontal position as possible (auger will need to be in the full down position and as level as possible for an accurate reading).
2. Remove the plug from the gearbox (the plug is located behind the motor mount plate). Oil should begin to leak from the opening. If it does, oil level is sufficient, reinstall plug.

   If additional oil is needed, Use a syringe type device, and add oil. Add oil until it begins to flow out of the level check plug opening. Reinstall plug. **Do Not overfill. Too much oil may damage the seals.**

When additional oil is required, we recommend the use of an **SAE 85W140** non-foaming multipurpose gear oil. **Capacity: 8 oz.** ***(.24 L).***

Use a grade/brand that is commercially available for automotive differentials. Extra pressure additives may be of some value in severe applications.

ELECTRIC WINCH

WARNING! Shut off power and lockout power source before attempting to adjust, service, clean or repair the winch or any of its components.

A main power disconnect switch capable of being locked only in the "Off" position shall be used. This shall be locked whenever work is being done to the equipment.

The winch is shipped with **oil already installed.**

Even under normal operating conditions, oil still has the tendency to dissipate. Periodically check oil level and maintain proper oil level.

Before mounting the winch to onto the auger, place winch on bench as level as possible. Remove one of the plugs as stated in procedures below and verify oil level.

Check Oil Level:
Winch Mounted to Auger

1. Place the auger in as horizontal position as possible (auger will need to be in the full down position and as **level as possible** for an accurate reading).
2. Remove the plug from the gearbox as shown in Fig. 12, oil should begin to leak from the opening. If it does, oil level is sufficient, reinstall plug (there are a total of four plugs that can be used for checking and adding oil. Use plug that works best for you).

   If additional oil is needed, add oil until it begins to flow out of the level check plug opening (a syringe type device works good for adding the oil). Reinstall plug. **Do Not overfill. Too much oil may damage the seals.**

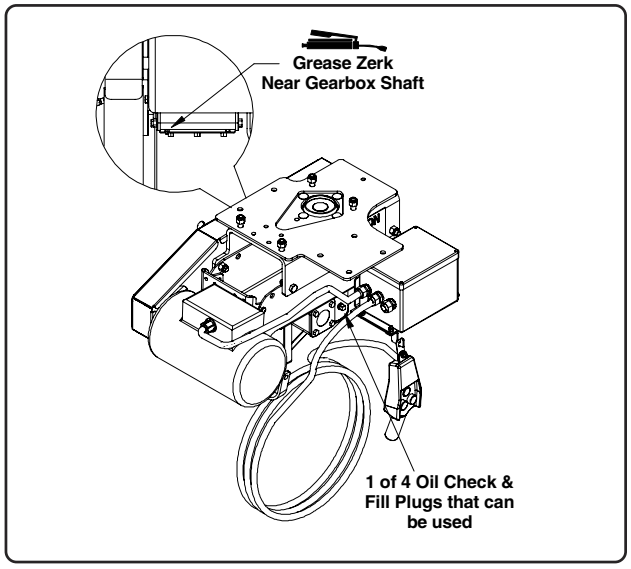

Fig. 12

When additional oil is required, we recommend the use of an **SAE 85W140** non-foaming multipurpose gear oil. **Capacity: 8 oz. *(.24 L).***

Use a grade/brand that is commercially available for automotive differentials. Extra pressure additives may be of some value in severe applications.

3. There is a **grease zerk** located on the bottom side of the gearbox near the shaft attached to the driven sheave (See Fig. 12). Grease has been installed at the factory.

   Because the winch is a "low use" component, **1 pump at the beginning of every second season** will be sufficient. Use a good quality lithium based grease.

Electric Winch Belt Adjustment:

1. Check belts for fraying, cracking, or other damage. Replace as necessary.
2. Check belts for proper tension. Belts should deflect approximately 1/2" *(13 mm)* when firmly pressed in the center of the span between the two sheaves.
3. To adjust belt tension, loosen the four bolts securing the motor mount plate (two bolts on each side of motor mount plate, the lower bolt on the right-hand side also secures the electric cord strap hanger, See Fig. 13).

   Using a pry bar, piece of wood or similar object, pry the motor mount plate out to achieve proper belt tension (the pry bar can be inserted from the top side of the motor mount plate). After proper tension has been set, retighten all four bolts.

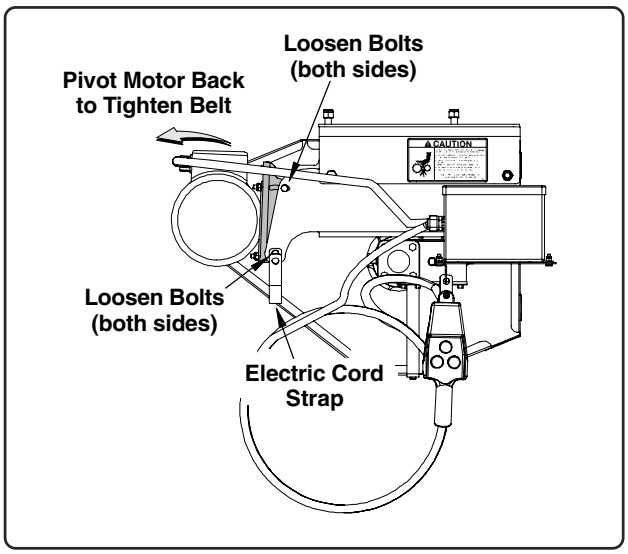

Fig. 13

ELECTRIC WINCH (con't.)

Connect Power to Winch

WARNING! Shut off power and lockout power source before attempting to adjust, service, clean or repair the winch or any of its components.

Electric motors and controls shall be installed by a qualified electrician and must meet the standards set by the National Electric Code and all local and state codes.

1. Remove the cover from the control panel box (See Fig. 14A).
2. Bring in power cord through the cord grip, attach **BLACK** to contact **L1**, **WHITE** to **3L2** and **GREEN** to **GND** (See Fig. 14).

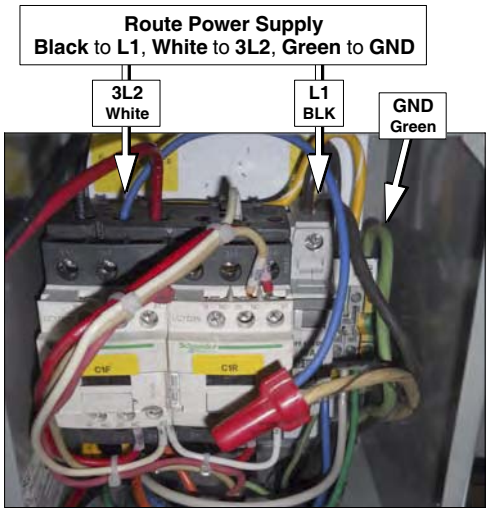

Fig. 14

Pendant Operation

The winch pendant has a Forward and Reverse button that operate's winch direction (See Fig. 14A). Typically "Forward" is used to raise the auger and "Reverse" is used to lower the auger.

IMPORTANT! To avoid damage to winch motor, it is recommended to pause two (2) seconds before changing winch direction. Avoid pressing forward and reverse buttons in rapid succession.

If the winch operates in the opposite direction shown on the label, or opposite as desired by the operator, reverse the two wires that are located on the backpanel in the control box (See Fig. 15).

If the winch should stop during operation, or it does not work after electrical connection has been made, the breaker inside the control box may have flipped.

ELECTRIC WINCH (con't.)

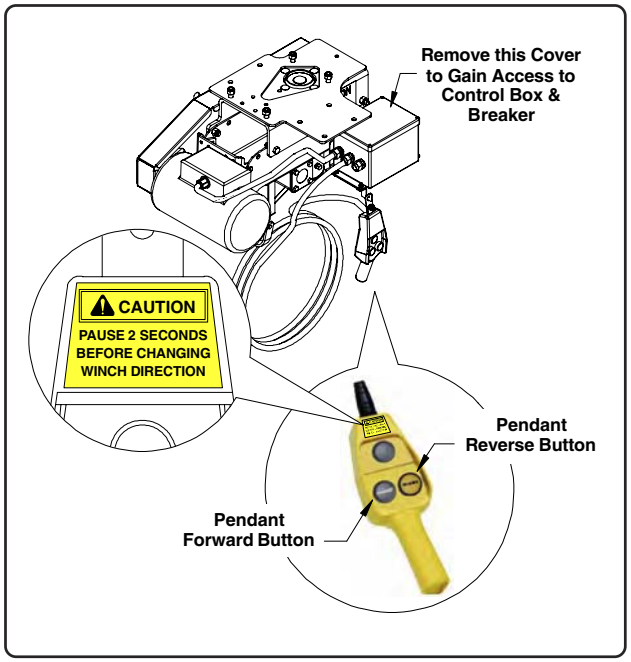

Fig. 14A

IMPORTANT! It is suggested to have a qualified electrician or a Hutchinson/Mayrath service tech perform the following procedure.

1. **Shut off and lockout the power source.** Remove the cover from the control panel box.
2. Reverse the **1L1** & **5L3** wires as shown below.

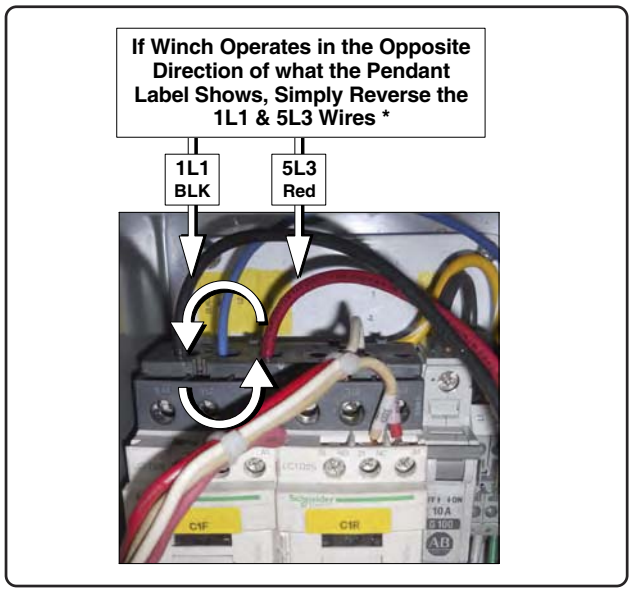

Fig. 15

ELECTRIC & PTO DRIVE GEARBOX

IMPORTANT! The gearbox is shipped WITHOUT oil. Oil *must* be added before operation.

Under normal working conditions oil will dissipate, even in an enclosed gearbox. Check oil in gearbox periodically and maintain proper level.

Add **approx. 28 oz. *(.83 L)* of EP80W90** non-foaming multipurpose gear oil when used in normal operating temperatures between 40°F to 120°F *(4.4°C to 48.9°C).*

Use a grade/brand that is commercially available for automotive differentials. Extra pressure additives may be of some value in severe applications.

For temperatures below 40° *(4.4°C)* an EP 80W oil is recommended.

The oil level should be checked prior to the first time the auger is to be operated.

Check oil level by positioning the auger so the PTO gearbox is as level as possible (See Fig. 16). Remove the vented plug on top of the gearbox and visually inspect the oil level, or insert a dipstick into the opening and record the oil level. Whichever method is used, make sure to use the same procedure for future oil level checks (the auger should also be in the same position when future oil levels are taken).

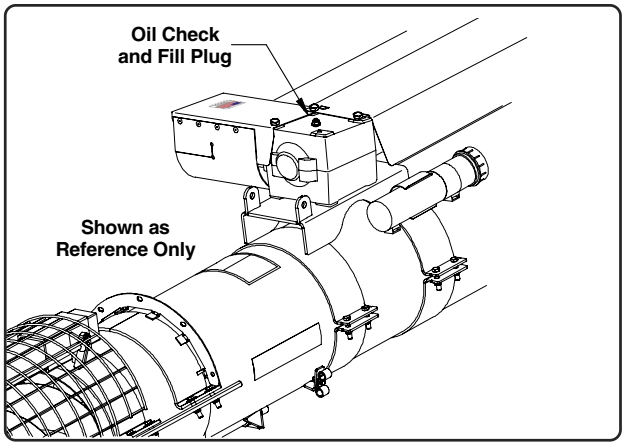

Fig. 16

PTO DRIVELINE LUBRICATION

WARNING! Before engaging PTO, be sure the PTO driveline shaft shield turns freely on shaft.

Keep hands and clothing away from the PTO components during operation.

The PTO driveline has three (3) fittings that require lubrication (See illustration on Page 23).

Lubricate all fittings with a good quality lithium based EP grease which meets NLGI No. 2 Specifications and contains no more than 1 percent molybdenum disulfide (example: Shell Super Duty or equivalent).

An EP grease meeting the NLGI No. 2 Specifications and containing 3 percent molybdenum disulfide **may be substituted in the telescoping members only** example: Mobil Oil Co. (Mobil Grease CMP); Shell Oil (Retinax AM); & Texaco (Molyex EP No. 0 & No. 2).

Telescoping members should be lubricated while in the collapsed position.

- The first lube interval should be **16 to 24 hours after initial start-up and operation, then follow the recommendations shown on Page 23.**
- Check the u-joint setscrews at the auger end to make sure they are tight against the auger drive shaft.

Replacement Parts are Not Lubricated

Replacement parts must be lubricated at the time of assembly. Depending on the replacement part, use the chart on the following page (Page 23) to determine the proper amount of grease to use for that particular location. After repaired parts have been lubricated and installed, follow the recommendations in the chart for lubrication intervals.

PTO DRIVELINE SHEAR BOLT

The PTO driveline is equipped with a shear bolt at the tractor connection. Extra shear bolts are provided and stored in the operator's manual container.

The shear bolt protects the auger from damage should the auger become plugged or subjected to high loads. If this scenario should occur, the shear bolt would "shear off" causing the connection to the auger to suddenly stop (the tractor's PTO would still continue turning, but not the auger driveline).

Immediately shut down the tractor and lockout before attempting to investigate the cause of the problem.

It is important that the correct replacement bolt be of the same size and strength as the original (see chart below). This is to insure the shear device will function properly to help protect the operator and the auger.

PTO Driveline Lubrication Recommendations

After the first lube interval (first 16 to 24 hours of operation) the following schedule should be maintained.

Interval	Location	Amount
4 hrs.	U–Joint Cross & Bearing	1 Pump
8 hrs.	Telescoping Members	4–8 Pumps

Shear Bolt Specifications:

The following shear bolts are used with the 36', 52', 62' & 65' Top Drive Augers with PTO Drive.

3/8" x 1" Grade 8
(Shear Bolt Replacement Kit, Part No. 1018892)

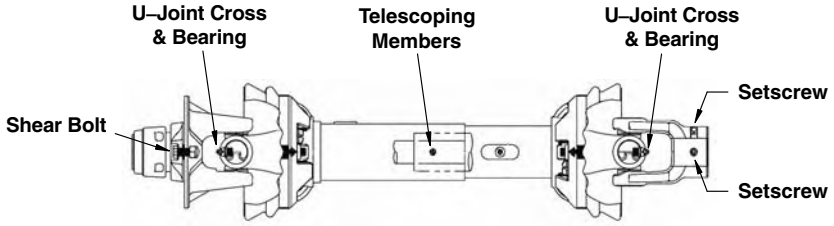

HEAD GEARBOXES

IMPORTANT! The gearboxes are shipped WITHOUT oil. Oil *must* be added before operation.

Under normal working conditions oil will dissipate, even in an enclosed gearbox. Check oil in gearbox periodically and maintain proper level.

To check oil levels or add oil, position the auger so the gearboxes are as level as possible.

Remove the plug from the front side of the gearbox (See Fig. 17). Remove the vent plug from the top of the gearbox, this will be the oil fill location.

The vent openings are small, a syringe type tool is useful when adding oil. Add oil until it begins to flow from the opening on the front side of the gearbox. Reinstall both plugs making sure they are properly tightened to prevent leakage.

When additional oil is required, we recommend the use of an **SAE 80-90W** non-foaming multipurpose gear oil for normal operating temperatures between 40° F to 120° F *(4.4°C to 48.9°C)*. Temperatures below 40° F *(4.4°C)* use an **SAE 80W** oil.

Use a grade/brand that is commercially available for automotive differentials. Extra pressure additives may be of some value in severe applications.

Capacity:

Each gearbox, approx. 50.4 oz. *(1.19 L)*

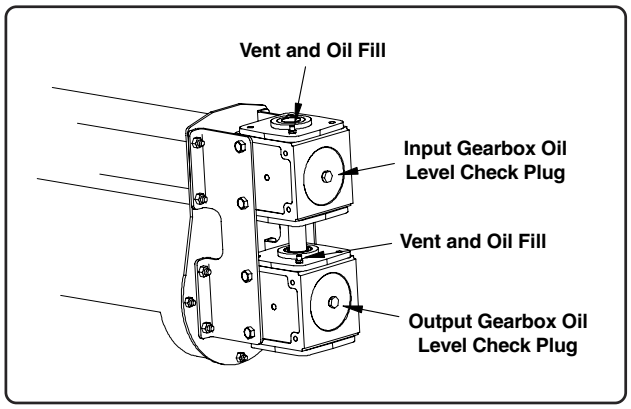

Fig. 17

TUBE SECTION LAYOUT

WARNING! Do Not rely solely on hydraulic or mechanical jacks or the hoist for support. Always use jack stands or equivalent for support.

Keep hands, legs and other body parts out from under the auger when auger is being raised by the hoist or by any other means.

Some parts are heavy, use assistance with lifting and while assembling these parts.

Wear the proper personal protective gear (ie. safety glasses, ear protection, gloves, etc.).

Keep the assembly and work area clean and free of tools and objects which could cause unsafe situations.

Whenever reference is made to the left, right, front or rear of the auger, it is always determined when standing at the hitch (inlet) end looking towards the discharge end.

Choose an open level ground accessible to a chain hoist or other lifting devices where the auger may be laid out in full length.

It will be convenient for assembly if the sections are placed on stands or saw horses, this will also make assembly of the undercarriage easier as well.

Be sure the stands or saw horses can support the weight of the tube sections. A stand height of 36" tall is recommended.

Before beginning assembly it is suggested to read through the assembly instructions in this manual and layout all items from the kits to ensure all parts are accounted for.

This not only helps you become familiar with the parts and assembly procedures, but also makes you aware of what tools, equipment or materials you may need.

Tube sections are shipped with the flights in the tubes and with the drive shafts installed. On PTO drive units, a short section of drive shaft (shipped in box of parts) will need to be installed as well.

The tube section layouts for the PTO drive models are shown on Page 25, the tube section layouts for the electric drive models are shown on Page 26.

1. The 36' Models have only one section of housing, lay out the other main auger components as shown in the illustrations on the following pages.

   Lay out the tube sections and main auger components for the 52', 62' & 65' Models in their respective order as shown in the following illustrations (leave enough space in between the sections to slide on the connecting bands).

   NOTE: The PTO drive models also have band-on bearing supports for the drive shaft. These bearing supports will be attached to the first tubing section and can be laid out with the components until assembled onto the unit.

When assembling the tube sections, begin assembly at the discharge end of the auger by installing the double gearbox. This will ensure the drive shafts are properly located.

When installing the band-on bearing mounts, use the appropriate drive shaft cover(s) to help locate where the band-on mounts will be positioned.

To do this, align the mounting holes in one end of the cover with the first bearing mount welded to the auger housing. Position the band-on mount at the opposite end of the cover aligning the mounting holes in the mount with the holes in the cover.

Snug the hardware to secure the band-on mount into place (do not tighten the band-on mounts completely at this time, they may need to be adjusted when installing the PTO drive gearbox).

TUBE SECTION LAYOUT (con't.)

PTO Drive Models

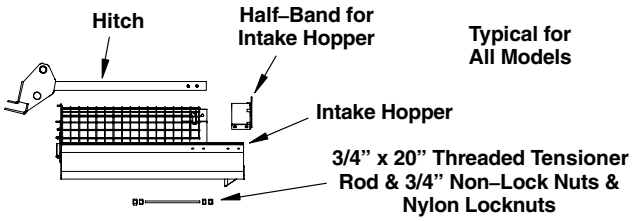

36' Model, PTO Drive

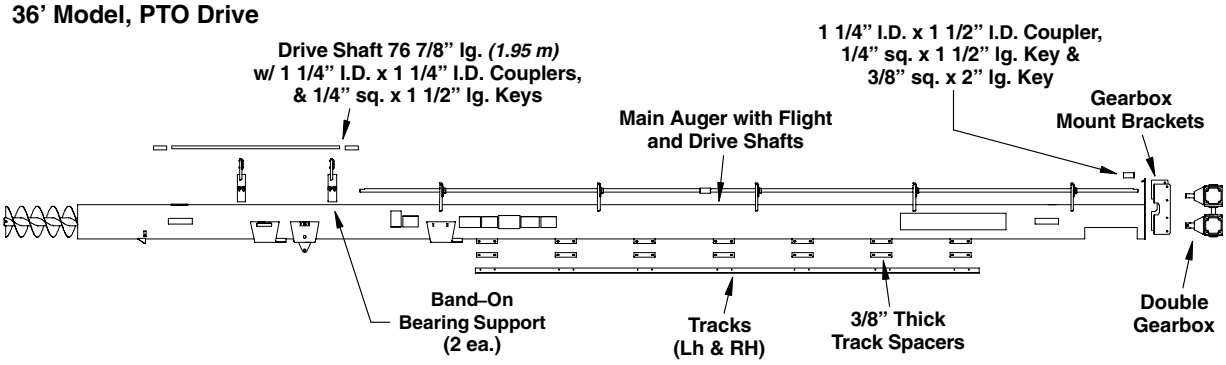

52' Model, PTO Drive

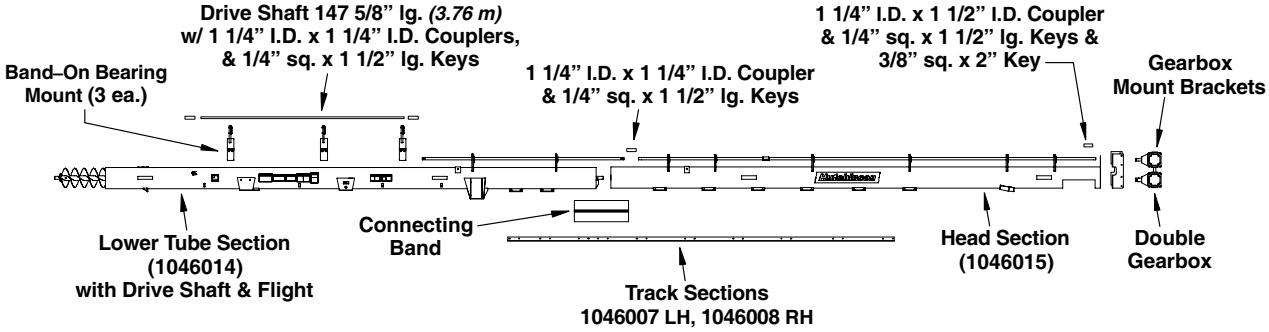

62' & 65' Models, PTO Drive

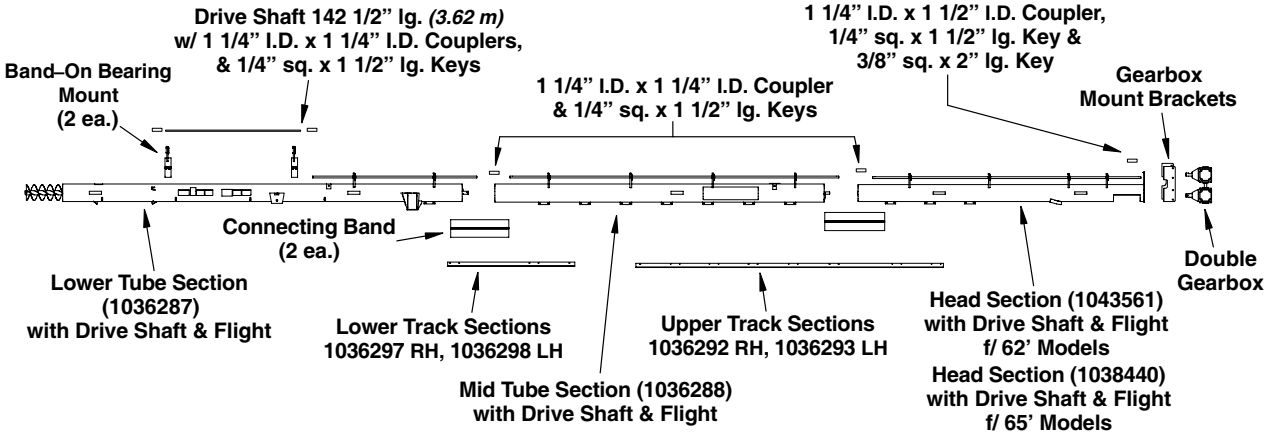

TUBE SECTION LAYOUT (con't.)

Electric Drive Models

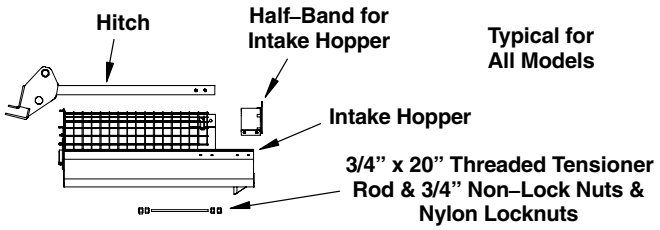

36' Model, Electric Drive

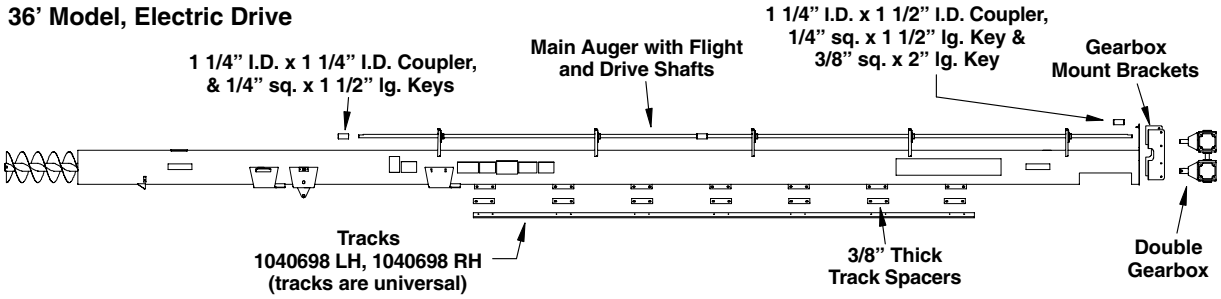

52' Model, Electric Drive

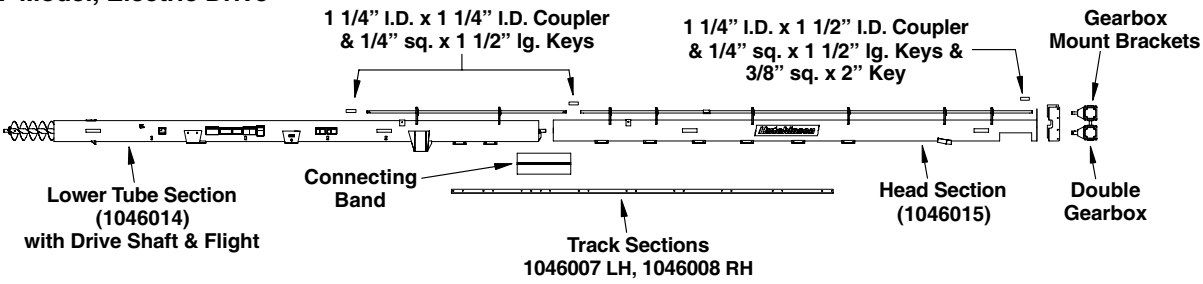

62' & 65' Models, Electric Drive

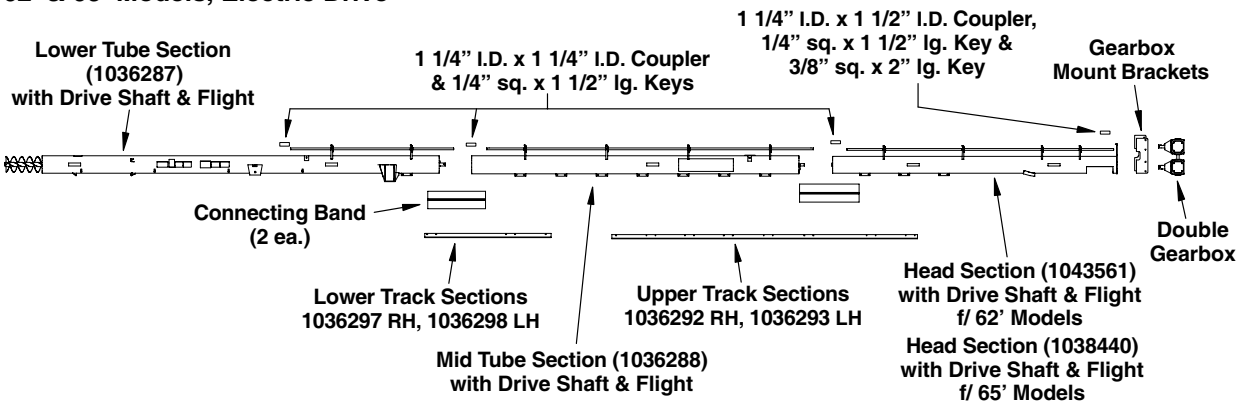

36', 52', 62' & 65' MODELS
GEARBOX TO HEAD SECTION
ASSEMBLY

IMPORTANT! The gearboxes are shipped WITHOUT oil. Oil *must* be added before operation. Refer to the "Lubrication & Maintenance" section (Page 23).

1. Attach the gearbox mounting brackets to the head plate on the discharge end of the auger. Secure brackets using eight (8) 1/2" x 1 1/4" bolts and nylon locknuts (See illustration below). Do Not tighten completely, leave a little bit of movement for installing the gearboxes.
2. **Apply anti-seize compound to the gearbox shafts and to the end of the drive shaft that will be connected to the upper gearbox.**

   Place a 1/4" x 1 1/2" key into the key way of the drive shaft and slide the 1 1/4" I.D. x 1 1/2" I.D. coupler onto the drive shaft.

   Place a 3/8" x 2" key into the keyway on the shaft of the upper gearbox.

   Position the gearboxes in between the brackets. Slide the upper gearbox shaft into the coupler and the lower gearbox shaft into the end of the head flight. Secure the gearboxes to the mounting brackets using the eight (8) 1/2" x 1 1/4" bolts and lock washers provided. Tighten mounting brackets hardware and the gearbox hardware.

   Secure the head flight using two (2) 5/8" x 4" black bolts, four (4) flat washers, four (4) rubber washers and two (2) side depress locknuts **(only tighten enough to allow slight compression of the rubber washer, Do Not tighten completely to where the rubber washers become deformed).**

   Install the head shaft cover and secure using four (4) 1/2" x 3/4" bolts and lock washers as shown in the illustration below).
3. It may be necessary to loosen the locking collars on the drive shaft to properly position it. There should be about an 1/16" to 1/8" *(2 mm to 3 mm)* space in between the shafts and snap ring to allow for snap ring clearance and expansion (the example shown below can be used for all coupler-to-shaft connections).

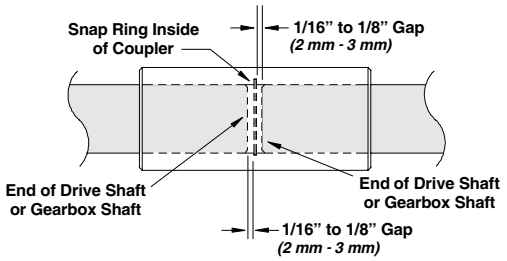

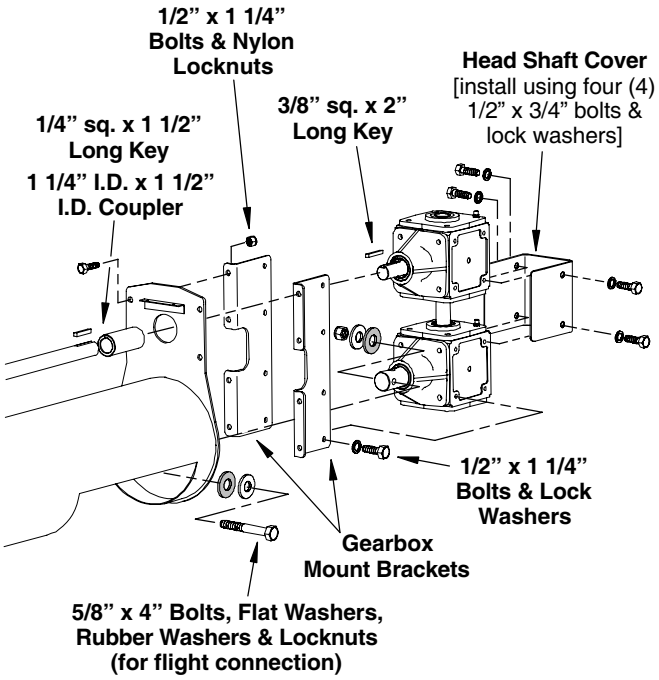

36', 52', 62' & 65' MODELS
AUGER HOUSING & FLIGHT ASSEMBLY

36' Models: The drive shaft and gearbox assembly is complete at this time. Continue with the track assembly beginning on Page 29.

62' & 65' Models: Continue with the tube section assembly instructions beginning below.

52', 62' & 65' Models

1. Position the next tube section for installation. Leave enough space in between the tubing sections to allow the connecting band to be installed and to allow enough room to attach the flights together.

   Remove the backing plates that are wired to the connecting bands. Slide a connecting band onto the discharge end of the next tubing section to be installed).

   Note the flanges on the connecting bands. One of the flanges protrudes (overhangs) further than the other. Position the connecting band on the auger tube so the flange that overhangs the most is on top, See Fig. 18.

   Install the backing plates using the 7/16" x 1 3/4" bolts and nylon locknuts provided. **Do not tighten the hardware at this time.**

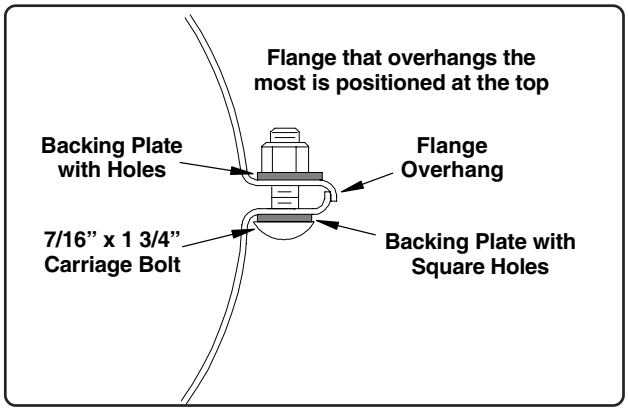

Fig. 18

2. Slide the flight from the mid section towards the head flight far enough to allow working room to connect the flights together.

   Apply an anti-seize compound to the flight shaft and attach the flight from the mid section to the head section flight using two 5/8" x 4" black bolts and locknuts (the lower section of flighting will overlap the head section flight by approximately 1" as shown in Fig. 19).

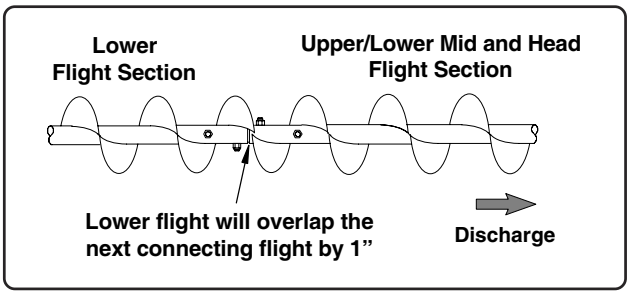

Fig. 19

3. **Apply an anti-seize compound** to the ends of the drive shafts. Install the 1/4" x 1 1/2" long keys into the keyways and slide a 1 1/4" I.D. x 1 1/4" I.D. coupler onto the end of the head section drive shaft.

   Slide the tubing sections together while inserting the lower drive shaft into the coupler and slide tubing sections together until they contact each other.

   Slide the connecting band into position (connecting band should be halfway over each tube). Do Not tighten hardware at this time, it will be tightened after track sections have been installed.

4. When the drive shafts have been connected, there should be an 1/16" to 1/8" *(2 mm to 3 mm)* space in between the end of the shafts and the snap ring that is inside the coupler. If necessary, loosen the bearing locking collars on the drive shafts and position accordingly (See Fig. 20).

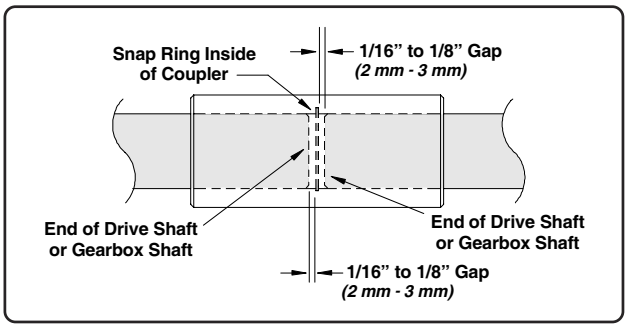

Fig. 20

5. Continue attaching the remaining tube, drive shaft and flight sections in the same manner until all sections have been assembled.

TRACK ASSEMBLY
36' MODELS

The 36' Models use only one set of tracks. The tracks are predrilled for attachment to the track mounting brackets and for the installation of the upper and lower trolley stops.

The tracks are also designed to be used on either the left or right side of the unit.

1. Position the left-side track so the single hole is at the lower end of the track (this hole is for the cable anchor attachment). Attach the tracks and 3/8" thick spacers to the track mount brackets using 1/2" x 4" bolts and nylon locknuts (the spacers go between the track and the mount bracket).

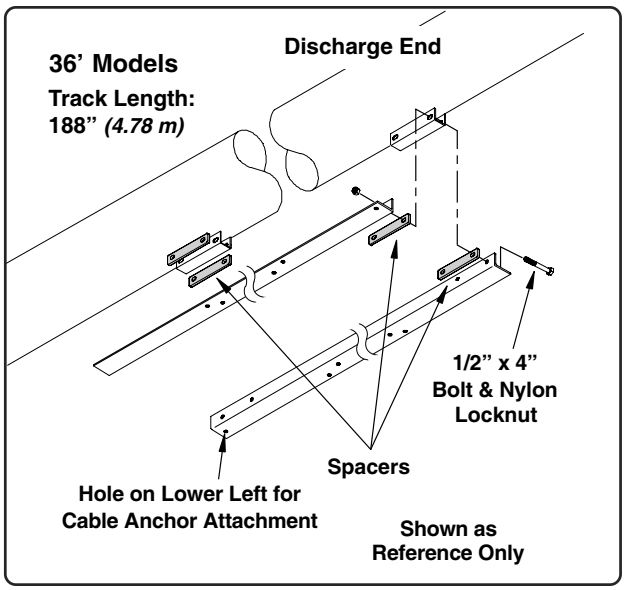

Fig. 21

TRACK ASSEMBLY
52', 62' & 65' MODELS

When installing the track sections you will note that some of the track mounting holes will not have any mounting brackets on the housing in which to attach to. These areas will generally be located under the connecting bands, use the 2" long spacers in these locations (the spacers will be positioned between the tracks as shown in Fig. 22.

The tracks have predrilled mounting holes for attachment to the track mounting brackets and predrilled holes for mounting the upper and lower trolley stops. There is also a left hand and right hand set of tracks.

The set of four (4) holes on the bottom side of the tracks will be positioned at the discharge end of the auger (See Fig. 23, Page 30).

TRACK ASSEMBLY
52', 62' & 65' MODELS (con't.)

The left, right, front and rear of the auger are determined while standing at the inlet end and looking towards the discharge end.

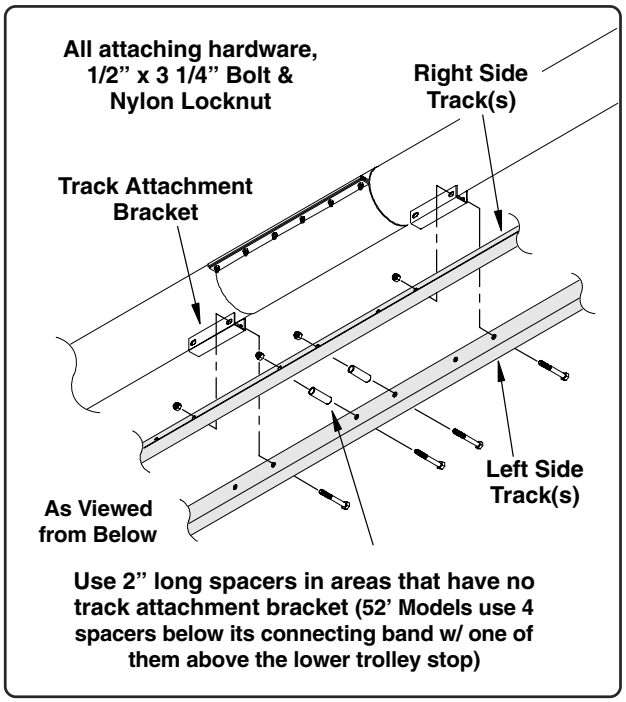

Fig. 22

1. Once all housing and flight sections have been assembled, verify the ends of the tubing sections are tight against each other and snug up the connecting bands **(the bands only need to be snugged up at this time, do not tighten them completely).**

   When snugging up the connecting bands, start with one of the middle bolts and work your way to one end, then start at the next middle bolt and work to the other end (See Fig. 24 for an example).

   NOTE: The tubing ends may not be completely square with each other, there may be a gap at the top and none at the bottom, or vice versa. As long as the tubing remains straight and in line, a small 1/16" to 1/8" gap is acceptable as long as some part of the tubes are making contact.

   On augers that use more than one set of tracks you will note that one end of the track has only one mounting hole approximately 3" from the end, this end will abut with the end of the next section of track which also has one hole 3" from its end (See Fig. 23).

TRACK ASSEMBLY
52', 62' & 65' MODELS (con't.)

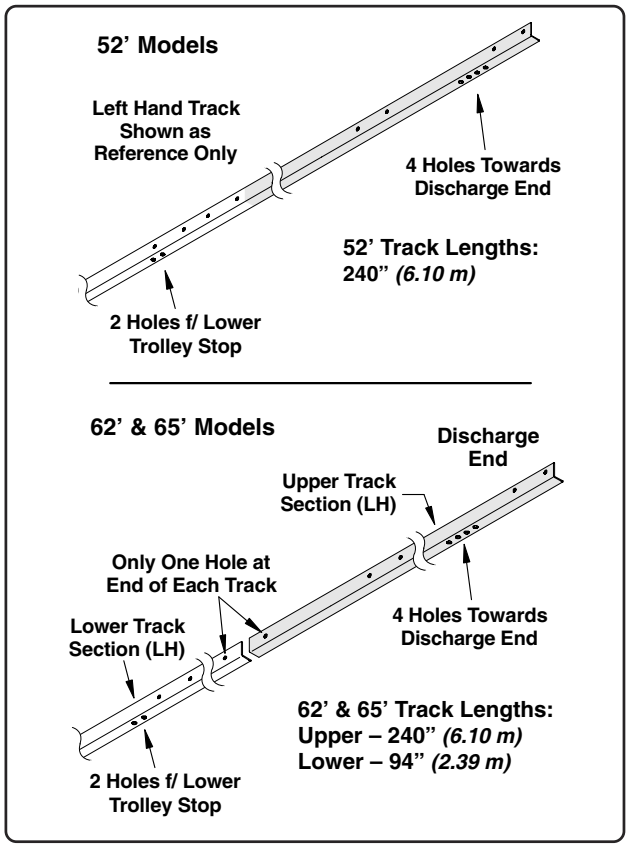

Fig. 23

2. Align the track mounting holes with the mounting brackets welded to the bottom side of the auger tubing. Secure the tracks to the mounting brackets using 1/2" x 3 1/4" bolts and nylon locknuts (use the 2" spacers in the locations that have no mounting brackets as shown in Fig. 22, these locations are generally beneath the connecting bands).
3. Snug up all the track bolts and verify the tracks are running straight (it may be necessary to loosen the connecting bands a little to help with alignment of the tracks).
4. Once tracks are properly in line, check to see that the tube ends beneath the connecting bands are still touching each other, then tighten all track hardware.
5. Check track alignment and tube ends once again and make any necessary adjustments.
6. Tighten the connecting band hardware. Tighten the bolts starting with one of the middle bolts and working to one end, then start again on the next middle bolt and tighten to the other end.
7. Repeat this process on each connecting band until all bolts are tight and the overhang on the flanges are tight together (See Fig. 24).

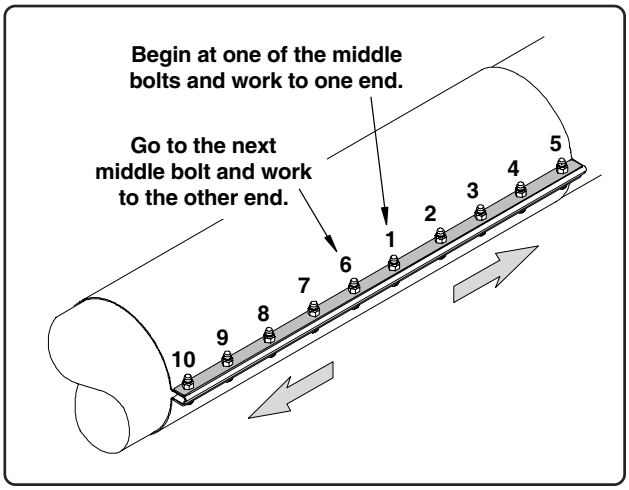

Fig. 24

IMPORTANT! The overhangs on the flanges are meant to be tight against each other, but Do Not tighten so tight that the flanges are crushed and become deformed (See Fig. 25). NOTE: If it is impossible to get the connecting band tight on the auger tube without overly deforming the clamp, a new connecting band may be necessary.

The connecting band should be tight against the auger tube, flanges should be parallel to each other and all bolts evenly tightened.

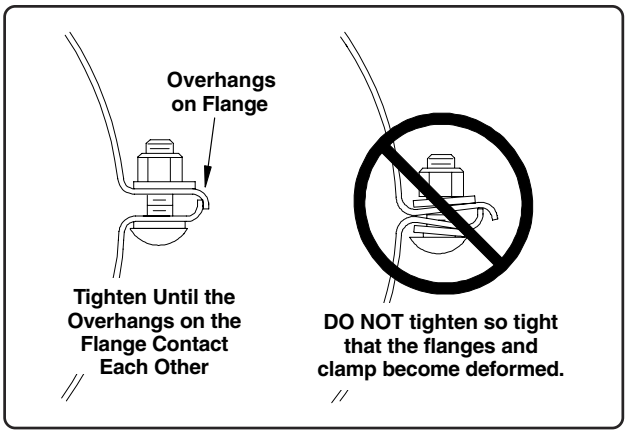

Fig. 25

36', 52', 62' & 65' MODELS INLET HOPPER, HITCH and JACK ASSEMBLY

CAUTION! Some auger components are heavy. To avoid personal injury, use assistance when assembling these parts.

1. Install the intake screen and hopper pan onto the inlet end of the auger. Insert the flight stub shaft through the bronze bearing on the rear of the inlet hopper plate.

   Secure each half-band using, four (4) 3/8" x 1 3/4" bolts, eight (8) flat washers and (4) four 3/8-16 nylon locknuts, and **loosely clamp the half-bands to the main auger tubing** (See illustration below).

2. Install a 3/4" non-lock nut onto each end of the 3/4" threaded tensioner rod and thread on far enough so the rod can be inserted through the bracket on the bottom of the main auger tube and the bracket on the bottom of the inlet hopper (See illustration below).

   Install a 3/4" nylon locknut onto each end of the tensioner rod. Tighten the locknuts on tensioner rod to achieve a 1/4" space between the bronze bearing mount and flight shaft stub (see illustration below). Tighten non-lock nuts against the brackets.

3. Tighten the half-bands into position (make sure the inlet hopper remains square with the main auger housing).

   IMPORTANT! When tightening the half-bands to the hopper pan, DO NOT tighten bolts so tight that they deform the hopper pan. Tighten bolts just tight enough until they start to distort the hopper pan, Do Not tighten beyond that point.

4. Once the inlet hopper is properly secured, install the hitch tube through the opening on the rear panel of the hopper and into the mount tube at the front of the screen (See illustration below).

   Secure hitch tube using one 1/2" x 3 3/4" bolt and nylon locknut.

5. Install the jack assembly onto the mount tube located on the side of the hitch. Secure the jack using the attached locking pin.

6. If the hitch cover plate is not installed onto the rear of the hitch, use the 1/4" x 3/4" bolt and nylon locknut to secure into place.

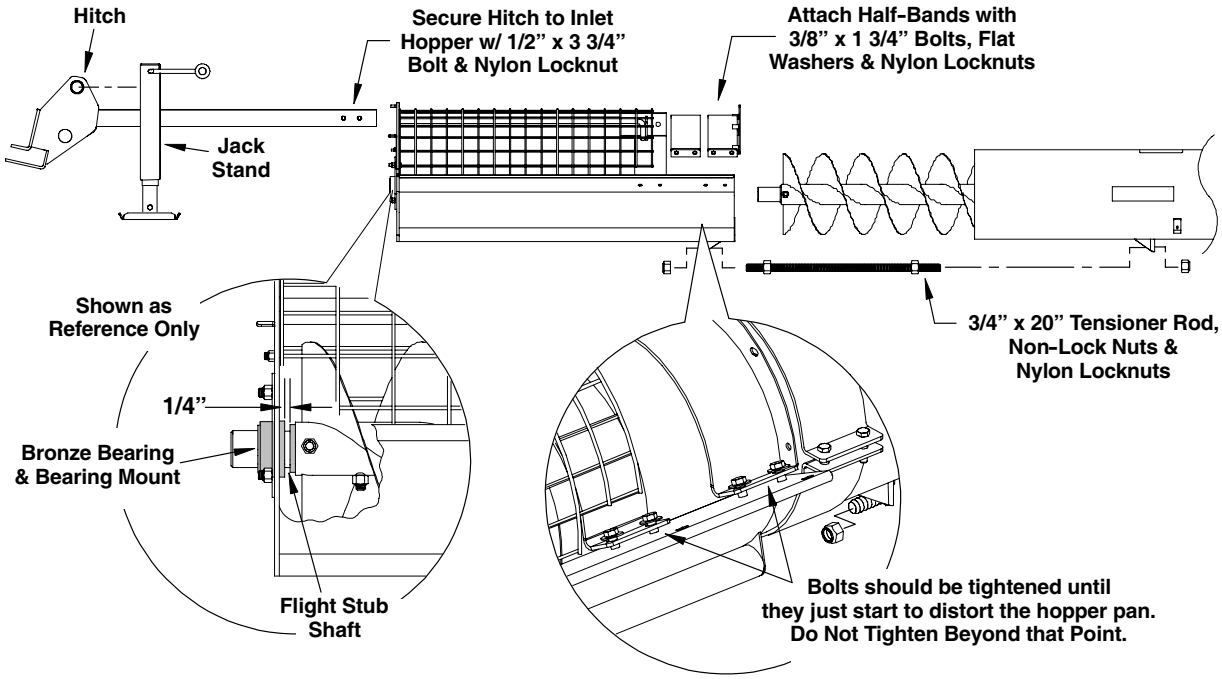

PTO DRIVE SHAFT INSTALLATION
36', 52', 62' & 65' MODELS

The PTO drive Models need to have a short section of drive shaft and two band-on bearing mounts (three on 52' Models) installed at the inlet end for connection to the PTO gearbox.

The short section of drive shaft, the band-on bearing mounts and the corresponding shaft covers are shipped separately with the appropriate PTO Drive Kit.

36' Models

1. Loosely fasten the band-on bearing mounts onto the auger housing at the approximate locations shown in Fig. 27 **(the bearings will face towards the discharge end of the auger).**
2. To locate the band-on bearing mount that will be closest to the inlet end, use the 78" *(1.98 m)* long drive shaft cover and align one end with the mounting holes on the first bearing mount welded to the auger housing. Position the band-on bearing at the other end and align mounting holes with cover.

   Locate the 76 7/8" *(1.95 m)* long drive shaft, coupler and 1/4" sq. x 1 1/2" long keys from the parts box.

   From the inlet end, slide the drive shaft through the bearings and position the end of the shaft near the existing drive shaft.

   Insert the 1/4" x 1 1/2" keys into the keyways on both shafts. Apply an anti-seize compound to the shaft ends and using the coupler, connect the shafts together [leave about a 1/16" to 1/8" *(2 mm - 3 mm)* space between the shafts to allow for expansion as shown in Fig. 28A].

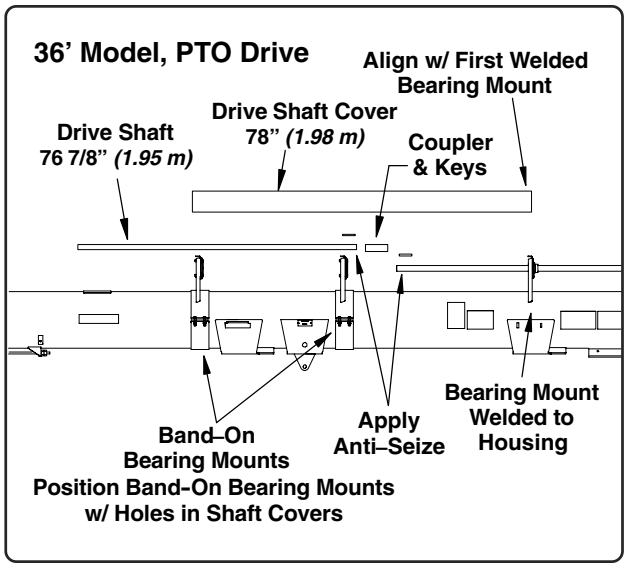

Fig. 27

52' Models

1. Loosely fasten the band-on bearing mounts onto the auger housing at the approximate locations shown in Fig. 27A **(the bearings will face towards the discharge end of the auger).**
2. To locate the band-on bearing mounts, position the wide end of the 89 3/4" *(2.28 m)* long shaft cover over the first bearing mount welded to the auger housing and align the mounting holes. Position one of the band-on bearings so the mounting holes align with the holes in the middle portion of the shaft cover, and position another band-on bearing at the other end of the cover.

   Place the 61" *(1.55 m)* shaft cover on top of the previous band-on bearing and locate the third band-on bearing mount in the same manner.
3. From the inlet end, slide the 147 7/8" *(3.76 m)* long drive shaft through the bearings for connection to the existing drive shaft. Insert the 1/4" x 1 1/2" keys into the keyways on both shafts. Apply an anti-seize compound to the shaft ends and using the coupler, connect the shafts together [leave about a 1/16" to 1/8" *(2 mm - 3 mm)* space between the shafts to allow for expansion as shown in Fig. 28A].

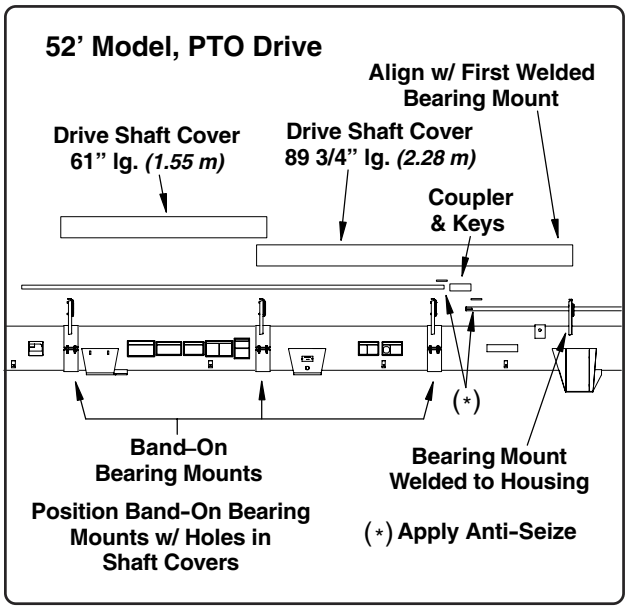

Fig. 27A

62' & 65' Models

1. Loosely fasten the band-on bearing mounts onto the auger housing at the approximate locations shown in Fig. 28 **(the bearings will face towards the discharge end of the auger).**

62' & 65' MODELS (con't.)

2. To locate the band-on bearing mounts, use the two 73" *(1.85 m)* long drive shaft covers and align one end with the mounting holes on the first bearing mount welded to the auger housing. Position the band-on bearing at the other end and align mounting holes with cover.

   Position another 73" *(1.85 m)* cover on top of the previous band-on bearing and locate the next band-on mount in the same manner.

3. Locate the 142 1/2" *(3.62 m)* long drive shaft, coupler and 1/4" sq. x 1 1/2" long keys from the parts box.

   From the inlet end, slide the drive shaft through the bearings and position the end of the shaft near the existing drive shaft.

   Insert the 1/4" x 1 1/2" keys into the keyways on both shafts. Apply an anti-seize compound to the shaft ends and using the coupler, connect the shafts together [leave about a 1/16" to 1/8" *(2 mm - 3 mm)* space between the shafts to allow for expansion as shown in Fig. 28A].

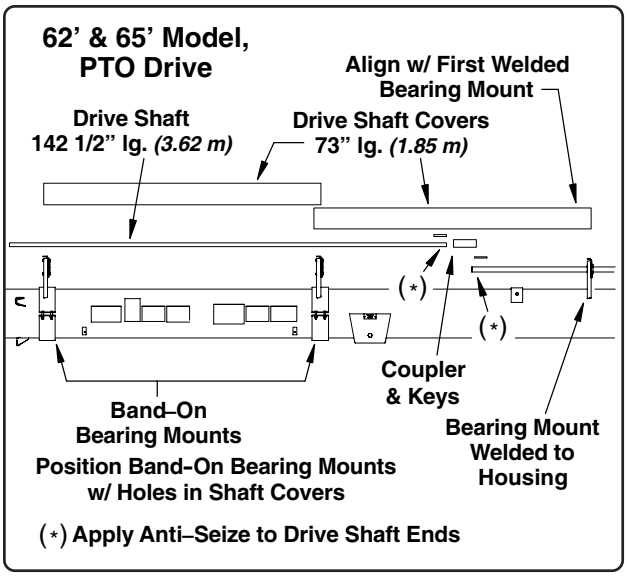

Fig. 28

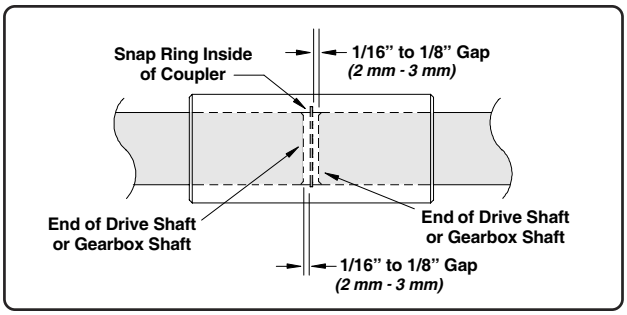

Fig. 28A

GEARBOX INSTALLATION for PTO DRIVE UNITS

Refer to Page 36 for gearbox installation on the electric drive models.

IMPORTANT! The gearbox is shipped without oil. Oil *must* be added before operation. Refer to the Lubrication and Maintenance Section on Page 22 for proper filling procedures.

1. Position the PTO gearbox mount plate and half-bands at the inlet end of the auger close to the end of the drive shaft. Loosely attach the mount plate and half-bands using eight (8) 3/8" x 1 3/4" bolts and nylon locknuts (See Fig. 28B).

2. Set the gearbox on top of the mount plate and secure using four (4) 1/2" x 1" bolts and lock washers.

3. **Apply an anti-seize compound** to the end of the drive shaft previously installed. Slide the coupler and 1/4" x 1 1/2" long key onto the end of the drive shaft.

4. **Apply an anti-seize compound** to the shaft on the gearbox. Insert the 1/4" sq. x 1 1/2" key into the end of the gearbox shaft and slide the gearbox and mount assembly towards the drive shaft, inserting the gearbox shaft into the coupler [leave a 1/16" to 1/8" *(2 mm - 3 mm)* gap between the end of the shafts and the snap ring in the coupler as shown in Fig. 28A].

   Make sure the drive shaft is properly aligned and the band-on bearings are positioned properly. Tighten the hardware securing the gearbox mount, its half-bands and the band-on bearing half bands.

   It is important to keep the drive shafts aligned the entire length of the auger.

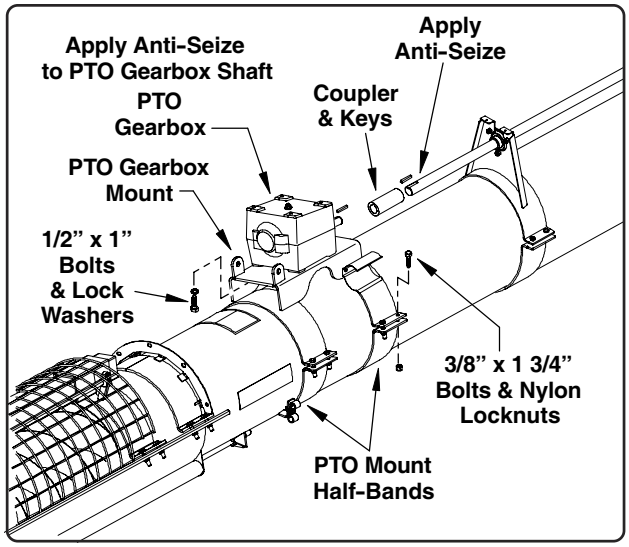

Fig. 28B

PTO DRIVELINE INSTALLATION

1. Position the PTO driveline transport/storage cradle and attaching half-band onto the auger housing as shown in the illustration below. On **62' & 65' Models**, locate the cradle to the front side of the band-on bearing mount. On **36' & 52' Models**, locate the cradle on the rear side of the band-on bearing mount.

   Using two (2) 3/8" x 1 3/4" bolts and nylon locknuts, loosely attach the cradle and half-band to the housing (some adjustment may be necessary after the PTO driveline has been installed, so do not completely tighten the hardware at this time).

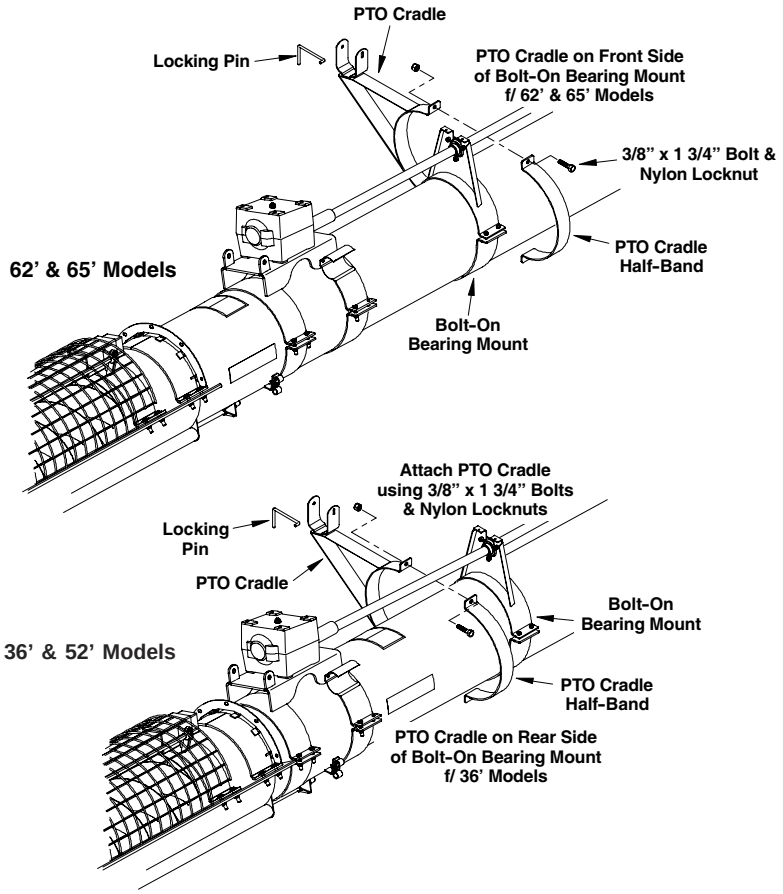

2. Slide the PTO u-joint shield over the end of the PTO driveline. Install a 3/8" sq. x 2" long key into the keyway on the gearbox input shaft, apply anti-seize compound to the shaft and attach the 1 1/2" diameter bore end of the driveline to the input shaft (See Fig. 29).

   Make sure the key is properly installed and ensure the setscrews in the u-joint yoke are tightened properly **(one of the setscrews needs to be positioned on the flat portion of the input shaft as shown in the illustration below).**

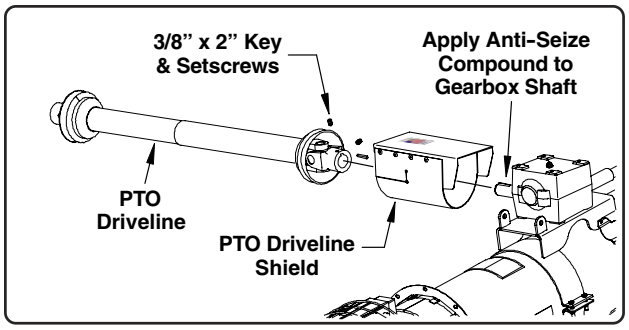

Fig. 29

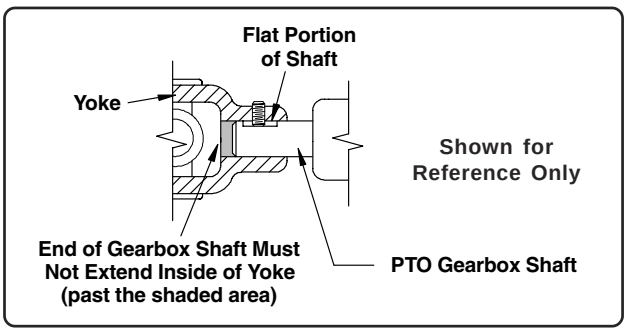

Fig. 30

PTO DRIVELINE INSTALLATION (con't.)

3. Secure the u-joint shield along with the drive shaft cover to the top of the PTO gearbox using three 1/2" x 3/4" bolts (the drive shaft cover measures 36 7/8" *(93.7 cm)* long and is flared at the inlet end, one corner of the drive shaft cover will sit on top of the u-joint shield using the same bolt to fasten both the shield and cover to the gearbox, See illustration below).

   The bolts securing the drive shaft cover to the first bearing support bracket can be installed when the remaining drive shaft covers are installed.

4. Position the PTO driveline so it will swing out towards the transport/storage cradle. Keep the driveline parallel with the auger housing.

   After the transport/storage cradle is properly positioned and supporting the driveline, tighten the hardware securing the cradle and half-band.

   Insert the cradle pin to lock the driveline into the cradle. **The driveline should always be stored in the transport/storage cradle when not in use and during transport.**

5. Snap the operator's manual container into the holder located on the right hand side of the PTO gearbox mount.

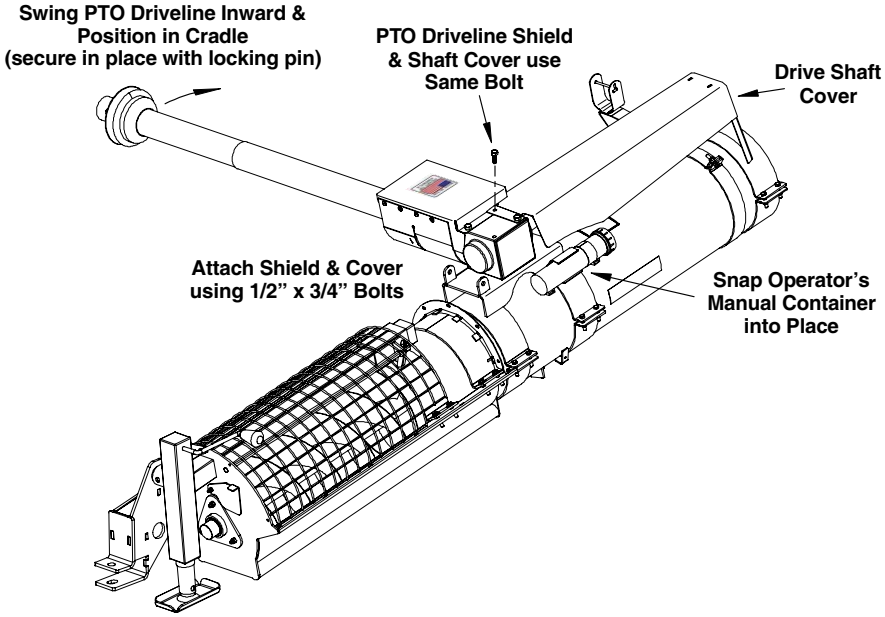

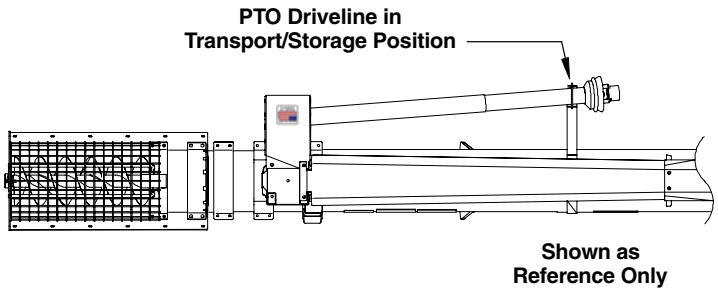

ELECTRIC DRIVE INSTALLATION

IMPORTANT! The gearbox is shipped without oil. Oil *must* be added before operation. Refer to the Lubrication and Maintenance Section on Page 22 for proper filling procedures.

The assembly procedures for mounting electric drive components is basically the same for the 36', 52', 62' and 65' Models. The 52', 62' & 65' Models use a half-band to attach the rear side of the motor mount plate to the auger housing whereas the 36' Models do not, See Pages 37 and 38.

There is also a difference in the drive sheaves and belts. The following assembly procedures will note these differences.

The assembly illustration for the 36' Models is shown on Page 37, assembly illustration for the 52', 62' & 65' Models is shown on Page 38.

1. Position the gearbox mount plate and half-bands at the inlet end of the auger close to the end of the drive shaft. Loosely attach the mount plate and half-bands using eight (8) 3/8" x 1 3/4" bolts and nylon locknuts (See illustration on Pages 37 & 38).
2. Set the gearbox on top of the mount plate and secure using four (4) 1/2" x 1" bolts and lock washers.
3. **Apply an anti-seize compound** to the end of the drive shaft and install a 1/4" x 1 1/2" long key and coupler to the end of the drive shaft.

   Insert a 1/4" sq. x 1 1/2" key into the keyway on the gearbox shaft and slide gearbox mount assembly towards the drive shaft, inserting the gearbox shaft into the coupler.
4. Make sure the gearbox and drive shaft are aligned and tighten the setscrews in the coupler and tighten the hardware securing the gearbox mount and half-bands. **IMPORTANT! Keep the drive shafts aligned the entire length of the auger. If necessary, realign gearbox to keep shaft in alignment with the first bearing support).**
5. Install the motor mount plate. Position the motor mount plate over the rear side of the gearbox. Lower the mount plate so the mounting ears on the motor mount plate align with the ears on the gearbox mount
6. Make sure the holes on top of the gearbox (rear side of gearbox) align with the holes on the motor mount plate. **The motor mount ears will be positioned on the right side of the gearbox mount ear (See illustrations on the following pages, Pages 37 & 38).**
7. Secure the motor mount plate to the top of the gearbox using two (2) 1/2" x 1" bolts, lock washers and flat washers.

   Secure the ears on the mount plates using two (2) 1/2" x 1 1/2" bolts and nylon locknuts.
8. **On 52', 62' & 65' Models,** secure the motor mount half-bands to the mount using four (4) 3/8" x 1 3/4" bolts and nylon locknuts (See Page 38).

   On 36' Models, secure the motor mount assembly to the mount tabs on the winch mount plate, using four 3/8" x 1 3/4" bolts, the 1" dia. x 1/4" thick flat washers and nylon locknuts (See Page 37).
9. Slide the belt guard mount bracket onto the motor mount tubes as shown on Pages 37 & 38. Attach the bracket using three (3) 5/16" x 2 1/4" bolts and nylon locknuts. Install the three bolts as shown in Fig. 31 below. **Do Not tighten bolts at this time.**

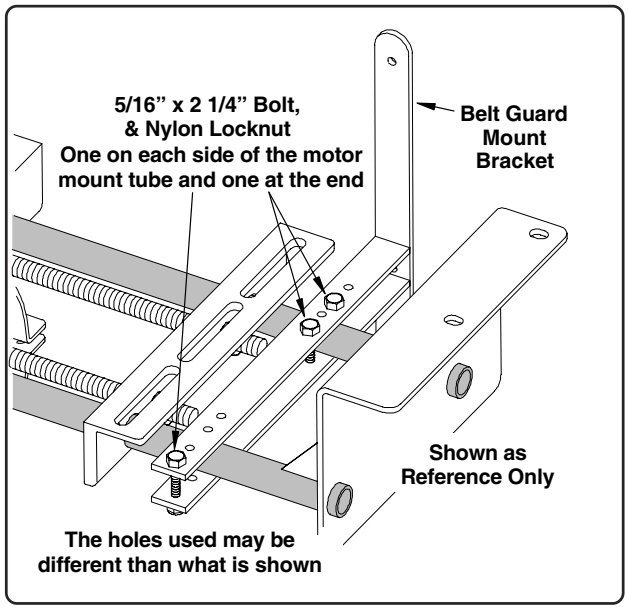

Fig. 31

10. Loosely attach the belt guard brace to the front left hole on top of the gearbox using one 1/2" x 1" bolt, lock washer and flat washer (See Pages 37 and 38).

    NOTE: The drive shaft cover will be fastened to the gearbox and will also use this bolt.

ELECTRIC DRIVE INSTALLATION (con't.)

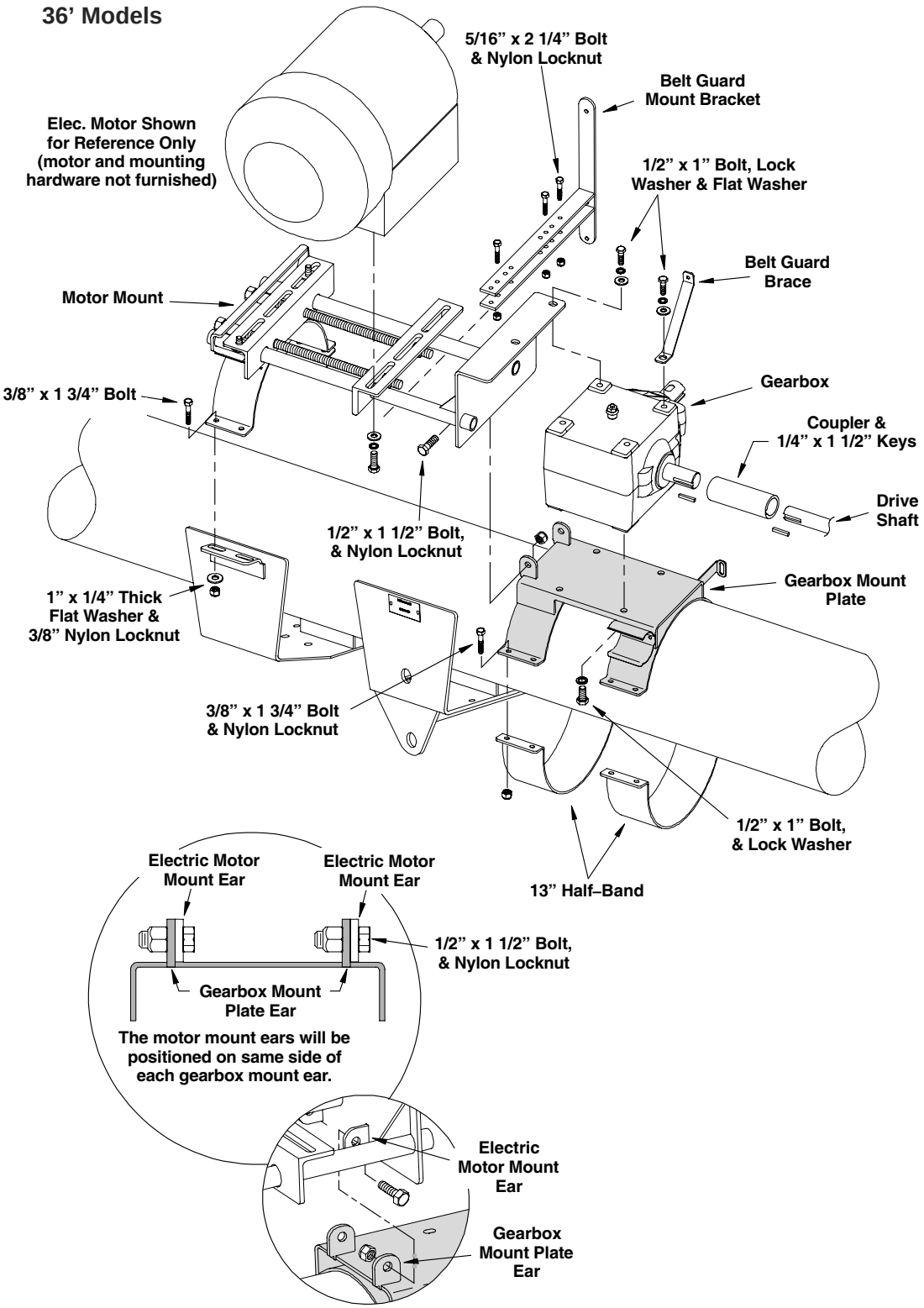

ELECTRIC DRIVE INSTALLATION (con't.)

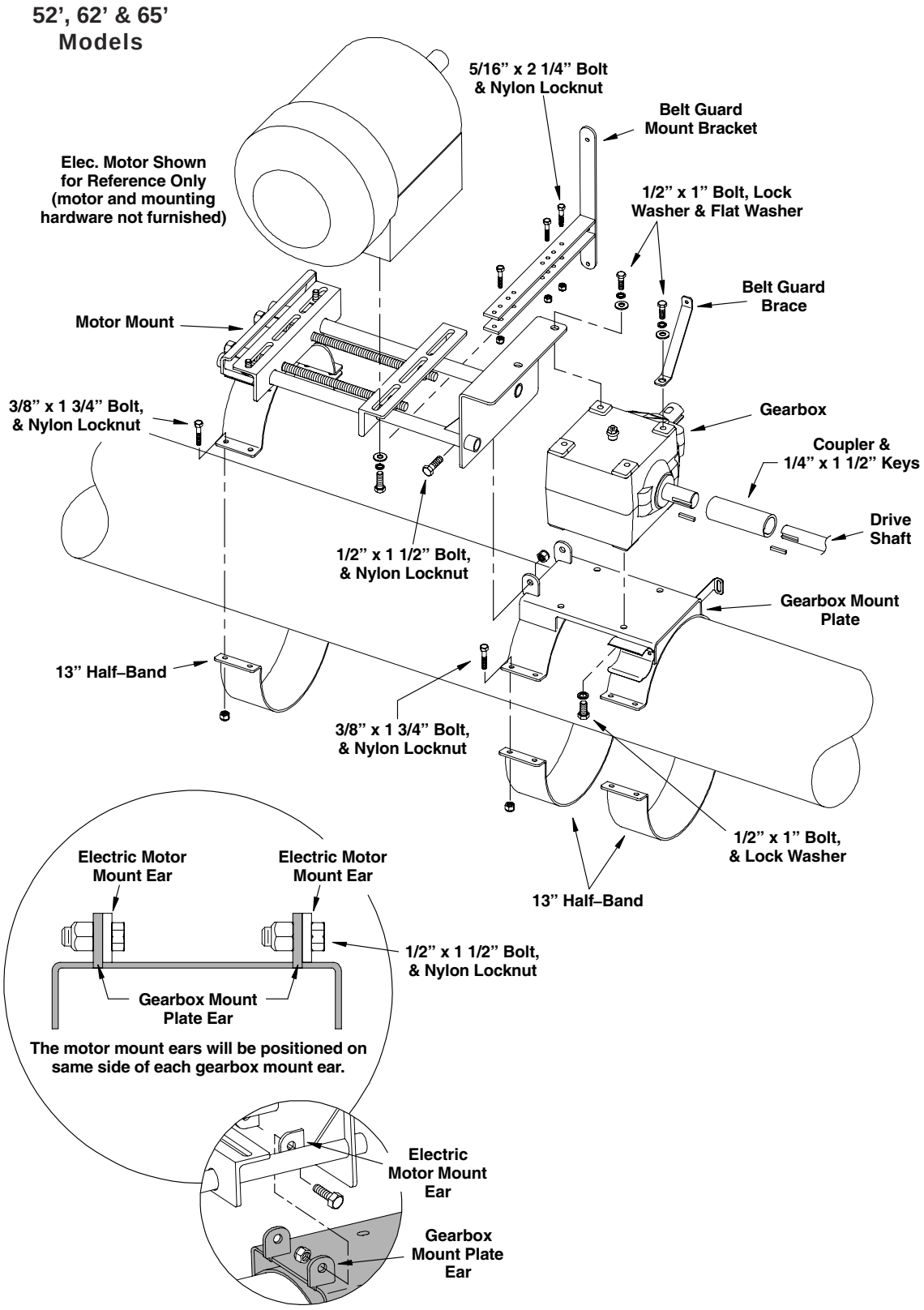

ELECTRIC DRIVE INSTALLATION (con't.)

10. One of the motor mount plates is attached to the threaded adjustment rods, the other mount plate will slide freely. Adjust the threaded rods to allow the proper distance between each mount plate for motor installation **(the motor and its mounting hardware are not furnished. Refer to Page 7 for proper motor size and information).**

    Install the appropriate sized motor. Leave the motor hardware loose enough to allow movement of the motor when installing the belt guard and sheaves.

11. Install the belt guard to the mount brackets previously installed (See illustration below). There is also a belt guard bracket already welded to the gearbox mount plate and will be located at the lower end of the belt guard.

    Position the belt guard with the two mounting holes in the belt guard mount bracket (attached to the two motor mount tubes) and loosely secure using two (2) 5/16" x 1" bolts, flat washers and nylon locknuts (flat washers over the slotted holes).

    Align each of the remaining brackets with the holes in the belt guard and loosely secure each with a 5/16" x 1" bolt, flat washer and nylon locknut (use the flat washers over all slotted holes).

    Position belt guard and tighten all hardware and the three (3) 5/16" x 2 1/4" bolts securing the belt guard mount bracket to the motor mount tubes.

12. **Apply anti-seize compound to the motor shaft and to the gearbox shaft.** Be careful not to use the anti-seize compound on the areas where the bushings contact the sheaves.

13. Install the appropriate sheave and bushing to the motor shaft **(the motor sheave and bushing are not furnished).**

    Install the sheave, QD bushing and 3/8" sq. x 2" key to the gearbox shaft. The 36' Models use a 13.6" P.D. sheave, 52', 62' & 65' Models use a 18.4" P.D. sheave.

    Align the two sheaves by placing a straight edge on the face of each. Secure the motor to the motor mount plates and check sheave alignment. Make any necessary adjustments and secure sheaves into place.

14. Install the belts over the sheaves. Using the two adjustment nuts on each of the threaded rods, tighten the belts until proper tension has been achieved. Make sure to adjust the nuts equally to keep the motor drive sheave properly aligned.

    Proper belt tension is approximately 9/16" of deflection per belt when using 7.50 lbs. of force at the center of the span between the two sheaves.

    After 24 hours of operation, and for the remainder of belt life, deflection should be 9/16" using 4.00 to 4.50 lbs. of force. If you do not have a weight set to apply the recommended force, a fish scale is a good alternative. Tension can also be checked by pressing firmly on the belts at the center of the span between the two sheaves.

15. Snap the Operator's Manual container into the clips located on the right side of the gearbox mount plate. **Ensure there is an Operator's Manual kept in the container at all times.**

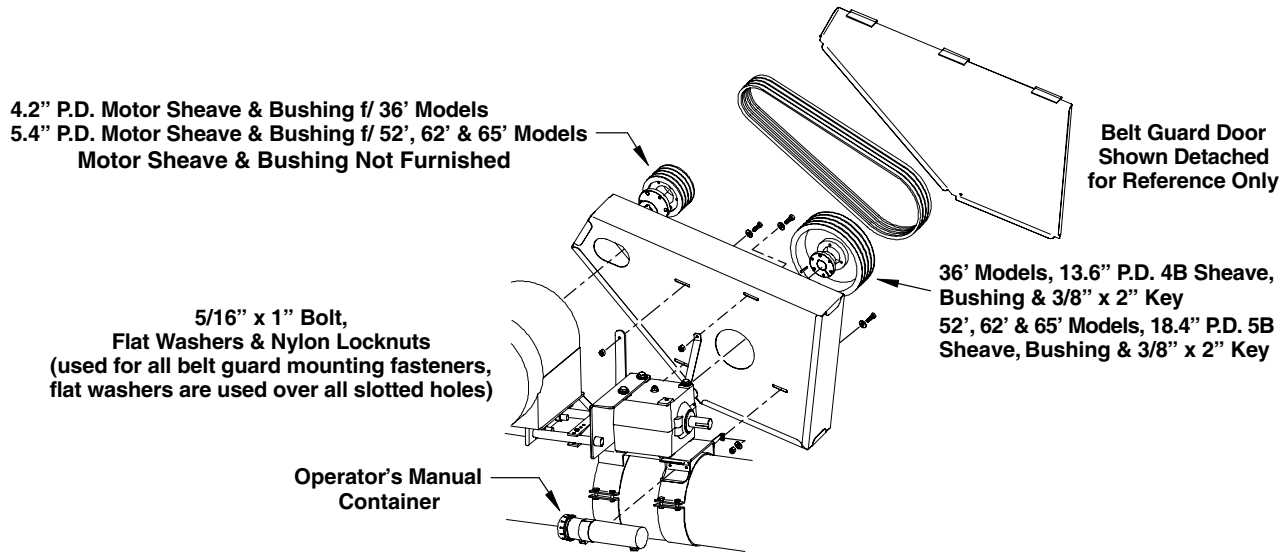

DRIVE SHAFT COVER INSTALLATION
PTO DRIVE

Note that the drive shaft covers are slightly wider at one end. The narrow end will face towards the discharge end of the auger. The wider end will always be positioned on top of the previous cover as shown in the illustration below.

The covers also come in various lengths. Use the chart below and illustrations on Page 41 to determine proper sequence when assembling the covers for the PTO Drive Models.

1. The covers will overlap each other at each bearing support with the narrow end resting on the bearing support and the wider end positioned over the previous cover.

   Begin at the lower end of the auger and install the covers as you work towards the discharge end of the auger. Secure the covers using two 1/4" x 3/4" self tapping screws.

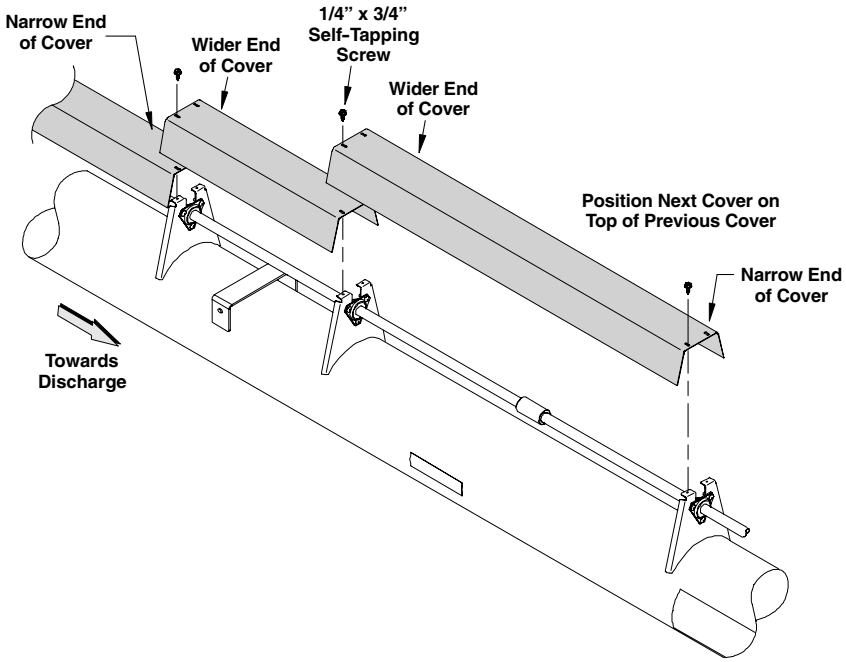

Drive Shaft Cover Sequence, Beginning at Inlet End
NOTE: The drive shaft covers and sequence shown are also used for units with the Optional Internal Bearings.

36' PTO Drive Models:

1 ea. - 1038505	36 7/8" lg. *(937 mm)*
1 ea. - 1038540	78" lg. *(1.98 m)*
4 ea. - 1038504	61" lg. *(1.55 m)*
1 ea. - 1038503	28 1/4" lg. *(718 mm)*

52' PTO Drive Models:

1 ea. - 1038505	36 7/8" lg. *(937 mm)*
1 ea. - 1038504	61" lg. *(1.55 m)*
1 ea. - 1046000	89 3/4" *(2.28 m)*
1 ea. - 1043556	52 3/8" *(1.33 m)*
1 ea. - 1038504	61" lg. *(1.55 m)*
1 ea. - 1046006	30 1/8" *(765 mm)*
3 ea. - 1038504	61" *(1.55 m)*
1 ea. - 1039294	58" lg. *(1.47 m)*

62' PTO Drive Models:

1 ea. - 1038505	36 7/8" lg. *(937 mm)*
2 ea. - 1034813	73" lg. *(1.85 m)*
7 ea. - 1038504	61" lg. *(1.55 m)*
1 ea. - 1043556	52 3/8" lg. *(1.33 m)*
1 ea. - 1043555	28 3/4" lg *(730 mm)*

65' PTO Drive Models:

1 ea. - 1038505	36 7/8" lg. *(937 mm)*
2 ea. - 1034813	73" lg. *(1.85 m)*
8 ea. - 1038504	61" lg. *(1.55 m)*
1 ea. - 1039294	58" lg. *(1.47 m)*

DRIVESHAFT COVER INSTALLATION (con't.)

PTO Drive Models

36' PTO Drive Models

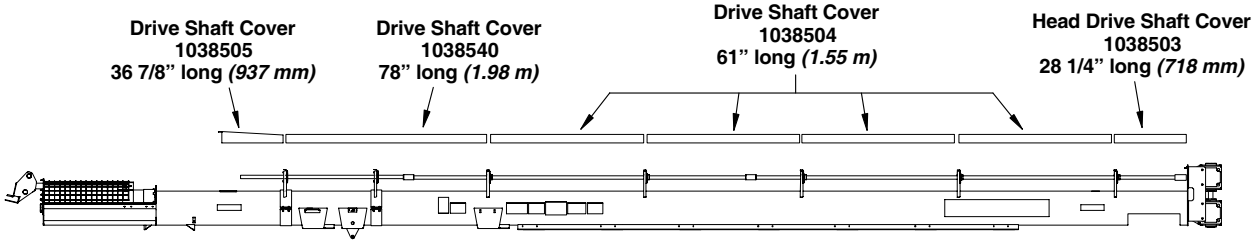

All Drive Shaft Covers are Secured with 1/4" x 3/4" Self Tapping Screws, Except Drive Shaft Cover to Gearbox, it uses 1/2" x 3/4" bolts

52' PTO Drive Models

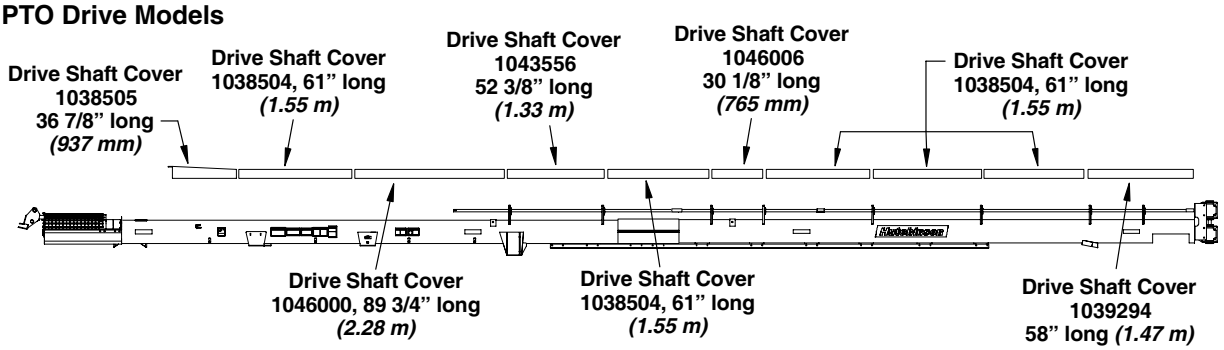

All Drive Shaft Covers are Secured with 1/4" x 3/4" Self Tapping Screws, Except Drive Shaft Cover to Gearbox, it uses 1/2" x 3/4" bolts

62' & 65' PTO Drive Models

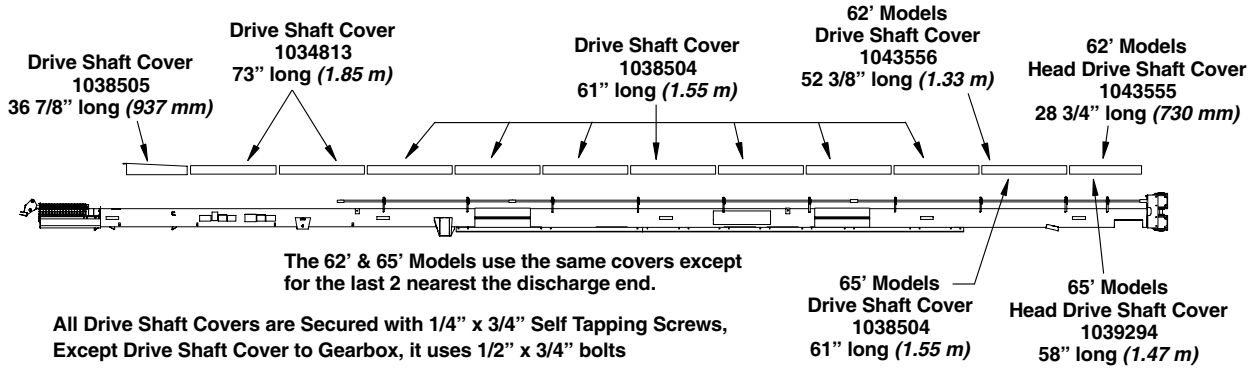

The 62' & 65' Models use the same covers except for the last 2 nearest the discharge end.

All Drive Shaft Covers are Secured with 1/4" x 3/4" Self Tapping Screws, Except Drive Shaft Cover to Gearbox, it uses 1/2" x 3/4" bolts

DRIVE SHAFT COVER INSTALLATION
ELECTRIC DRIVE

Note that the drive shaft covers are slightly wider at one end. The narrow end will face towards the discharge end of the auger. The wider end will always be positioned on top of the previous cover as shown in the illustration below.

The covers also come in various lengths. Use the chart below and illustrations on Page 43 to determine proper sequence when assembling the covers for the Electric Drive Models.

1. The covers will overlap each other at each bearing support with the narrow end resting on the bearing support and the wider end positioned over the previous cover.

   Begin at the lower end of the auger and install the covers as you work towards the discharge end of the auger. Secure the covers using two 1/4" x 3/4" self tapping screws.

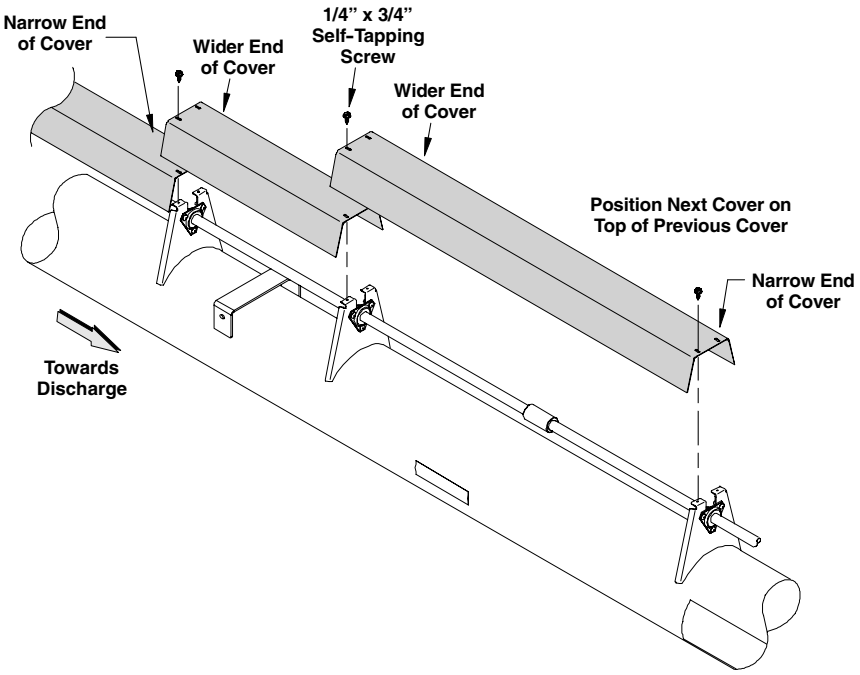

Drive Shaft Cover Sequence, Beginning at Inlet End
NOTE: The drive shaft covers and sequence shown are also used for units with the Optional Internal Bearings.

36' Electric Drive Models:

1 ea. - 1038505	36 7/8" lg. *(937 mm)*
4 ea. - 1038504	61" lg. *(1.55 m)*
1 ea. - 1038503	28 1/4" lg. *(718 mm)*

52' Electric Drive Models:

1 ea. - 1038505	36 7/8" lg. *(937 mm)*
1 ea. - 1043556	52 3/8" lg. *(1.33 m)*
1 ea. - 1038504	61" lg. *(1.55 m)*
1 ea. - 1046606	30 1/8" *(765 mm)*
3 ea. - 1038504	61" lg. *(1.55 m)*
1 ea. - 1039294	58" lg. *(1.47 m)*

62' Electric Drive Models:

1 ea. - 1038505	36 7/8" lg. *(937 mm)*
7 ea. - 1038504	61" lg. *(1.55 m)*
1 ea. - 1043556	52 3/8" lg. *(1.33 m)*
1 ea. - 1043555	28 3/4" lg *(730 mm)*

65' Electric Drive Models:

1 ea. - 1038505	36 7/8" lg. *(937 mm)*
8 ea. - 1038504	61" lg. *(1.55 m)*
1 ea. - 1039294	58" lg. *(1.47 m)*

DRIVESHAFT COVER INSTALLATION (con't.)

Electric Drive Models

36' Electric Drive Models

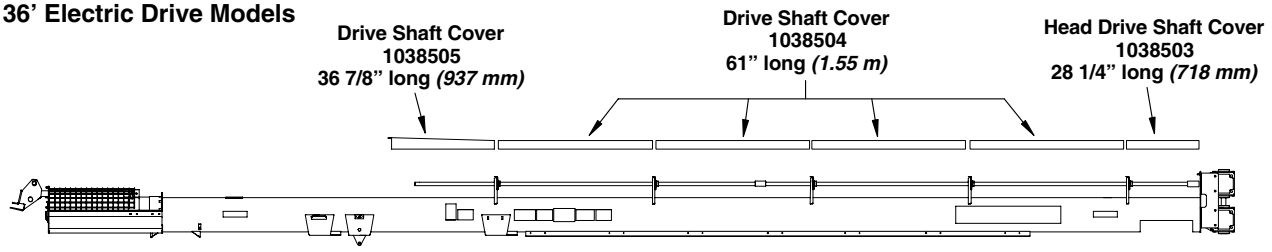

All Drive Shaft Covers are Secured with 1/4" x 3/4" Self Tapping Screws, Except Drive Shaft Cover to Gearbox, it uses 1/2" x 3/4" bolts

52' Electric Drive Models

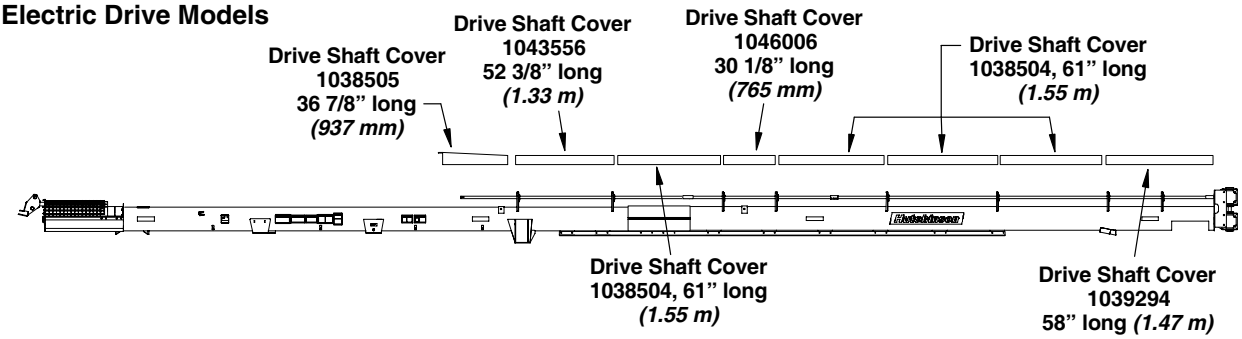

All Drive Shaft Covers are Secured with 1/4" x 3/4" Self Tapping Screws, Except Drive Shaft Cover to Gearbox, it uses 1/2" x 3/4" bolts

62' & 65' Electric Drive Models

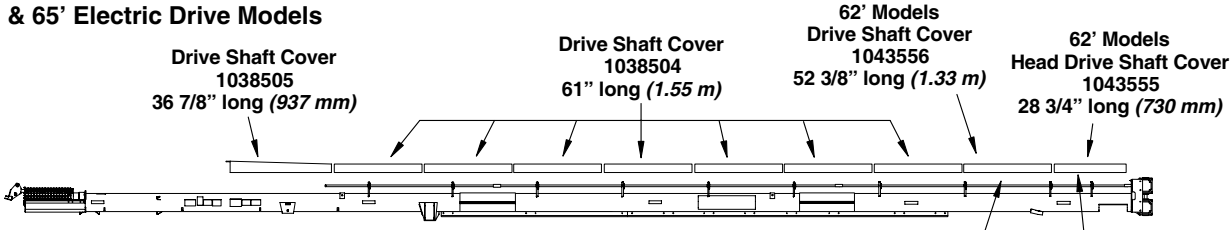

The 62' & 65' Models use the same covers except for the last 2 nearest the discharge end.

All Drive Shaft Covers are Secured with 1/4" x 3/4" Self Tapping Screws, Except Drive Shaft Cover to Gearbox, it uses 1/2" x 3/4" bolts

TROLLEY & TROLLEY STOPS

WARNING! The trolley will roll freely on the tracks. After upper trolley stop has been installed, secure the trolley to the stop to prevent it from rolling.

Be aware of pinch points during the assembly process. Use caution around these areas.

Install Trolley & Upper Trolley Stop

On 36' Models the trolley is part of the undercarriage assembly. The upper trolley stop will be installed when the undercarriage is assembled onto the main auger. Assembly procedures for the 36' Model undercarriage begins on Page 48.

The following trolley and upper trolley stop installation procedures refer to the 52', 62' & 65' Models.

1. Slide the trolley onto the tracks from the discharge end of the auger (pulley assembly facing inlet end).
2. Locate the eight (8) mounting holes (4 in each track) in the upper track sections. Secure the upper trolley stop to the tracks using eight (8) 7/16" x 1 1/4" bolts, flat washers and nylon locknuts as shown in Fig. 32.

   Use a strap or similar means to temporarily secure the trolley to the upper stop to prevent it from rolling during the remainder of the auger assembly process.

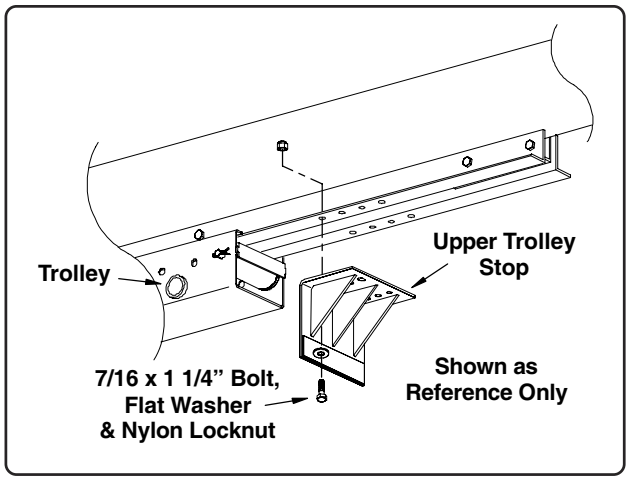

Fig. 32

Install Lower Trolley Stop

1. The lower trolley stop will mount to the tracks at the lowest set of holes at the inlet end of the tracks. Secure lower trolley stop using four (4) 1/2" x 1 1/2" bolts and nylon locknuts (See Fig. 33).

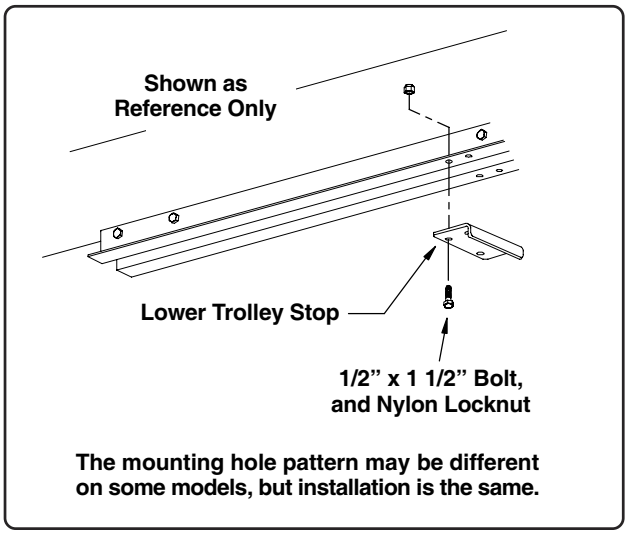

Fig. 33

UNDER TRUSS TOWER INSTALLATION 62' & 65' MODELS

Install Under Truss Tower

1. Attach the under truss tower to the undercarriage mount plate using four (4) 3/8" x 1" bolts and nylon locknuts (position the truss tower with the angled side facing the inlet end of the auger, See illustration below).
2. Insert a 5/8" eye bolt through the cable anchor located on the bottom of the first tube section as shown below. Thread two 5/8" non-lock nuts onto the end of the eye bolt leaving about 1" of the threads exposed.

   Insert another 5/8" eye bolt into the anchor strap located on the rear side of the winch mount and thread two 5/8" non-lock nuts onto the eye bolt as well (See illustration below).
3. Locate the 1/2" diameter x 17'-5" *(5.31 m)* cable from the box of parts,
4. Insert one end of the cable through the eye bolt at the inlet end and secure the cable end with two (2) 1/2" cable clamps (position the u-bolt portion of the clamp against the loose end of the cable as shown below).
5. Route the cable through the tube welded to the bottom of the truss tower and up to the eye bolt located at the winch mount.

   Pull excess slack from the cable and secure the cable end using two (2) 1/2" cable clamps positioning the u-bolt portion of clamp against the loose end of the cable.
6. Using the 5/8" nuts on the eye bolts, tighten the cable until cable is taut. Secure the two nuts on the eye bolts by tightening them against each other.

Under Truss Tower Installation f/ 62' & 65' Models

Under Truss Cable Lengths
62' Models – 1/2" dia. x 17'-5" long
65' Models – 1/2" dia. x 17'-5" long

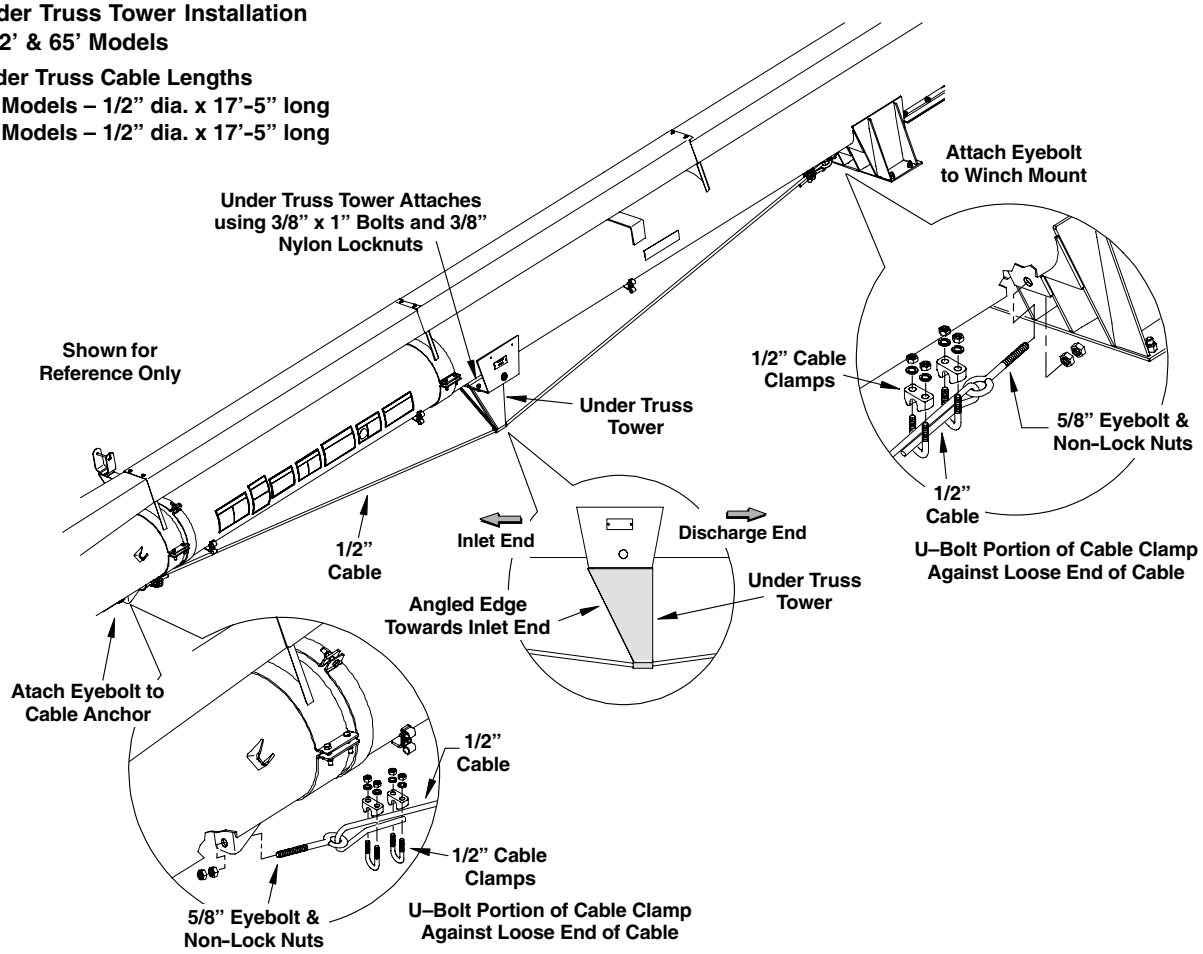

TRUSS ASSEMBLY
52', 62' & 65' MODELS

1. Loosely attach the truss sides to the truss mounting brackets welded to the auger tubes. Secure each truss side using one (1) 5/8" x 1 1/2" bolt and nylon locknut.
2. Install the truss crossbraces between the sides and secure using two (2) 3/8" x 1 1/4" bolts and nylon locknuts. The longer crossbrace will attach to the upper portion of the truss sides and the shorter crossbrace will attach to the lower portion of the truss sides (keep the crossbraces square with the edges of the truss sides and tighten into place).
3. Tighten the hardware securing the truss sides to the mounting brackets (keep the truss sides square with the edges of the mount brackets).
4. Install the 5/8" x 11" eyebolts through the bottom truss anchors located on each side of the lower tube section (See Detail "B" on the following page, Page 47). Thread two 5/8" non-lock nuts onto the end of each eyebolt.
5. For 52' Auger Models, locate the 1/2" dia. x 86' long *(13 mm x 26.21 m)* cable from the box of parts, for 62' & 65' Auger Models, use the 1/2" dia. x 107'-6" *(13 mm x 32.77 m)* cable.

   Find the middle of the cable by folding it in half and matching both loose ends of the cable. Using one (1) 1/2" cable clamp, attach the middle of the cable to the upper truss anchor. See Detail "C" on Page 47. Secure the cable and clamp to the truss anchor.
6. Temporarily route the cable over the top of the upper crossbraces and back down to the inlet end of the auger (the cable will attach to the eyebolts previously installed).
7. Attach the cable to the tops of the truss sides using the 1/2" cable clamps provided, See Detail "A" on Page 47. **Do Not tighten the clamps at this time.**
8. Insert each end of the cable through the eyebolts and pull the excess slack from the cables. Secure the cable ends using two (2) 1/2" cable clamps (See Detail "B" on Page 47). **Position the u-bolt portion of the clamp against the loose end of the cable.**

   Using the two 5/8" nuts on the ends of the eyebolts, tighten the cable until the truss is holding the auger straight, or until the upper portion of the auger has a slight bow at the discharge end. Tighten both eyebolts equally, making sure the auger is not being pulled to one side or the other. After the cable has been tightened, secure the two 5/8" nuts on the eyebolts by tightening them against each other.
9. Now go back and tighten all the cable clamps securing the cable to the tops of the truss sides. Check all hardware used to install the truss sections to ensure it has been properly tightened.
10. Check down the length of the auger again to make sure everything stayed aligned as the hardware was and cable clamps were tightened. Make any necessary adjustments.

TRUSS ASSEMBLY
52', 62' & 65' MODELS

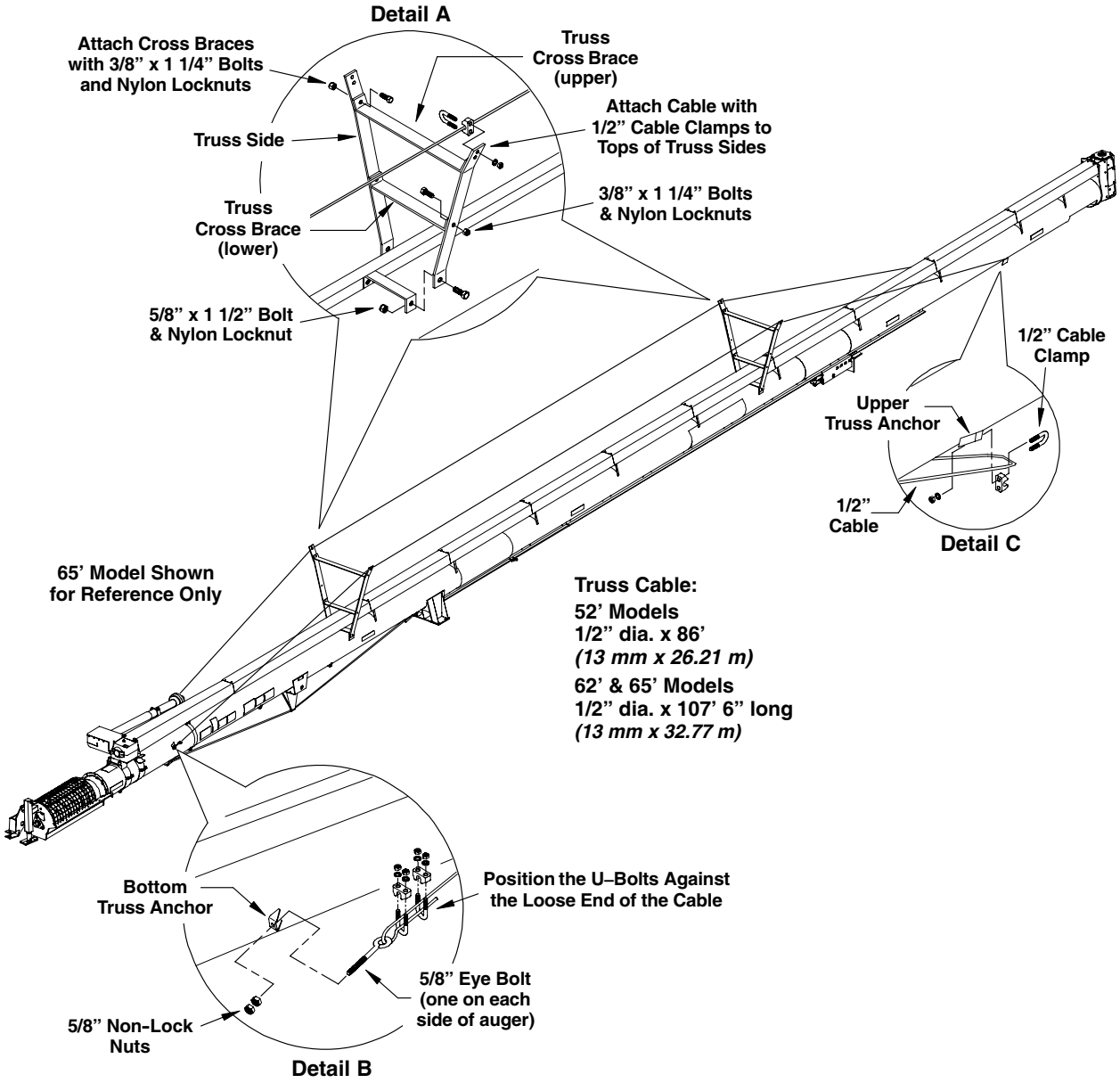

UNDERCARRIAGE ASSEMBLY
36' MODELS

WARNING! ***Do Not*** **rely solely on hydraulic or mechanical jacks, or the hoist for support. Always use jack stands or equivalent for support.**

Keep hands, legs and other body parts out from under the auger when auger is in the raised position.

Some parts are heavy, use assistance with lifting and assembling these parts.

Try to assemble the undercarriage next to the main auger and inlet hopper assembly, this will allow for minimal movement of the main auger when attaching it to the undercarriage..

The hubs, bearings, seals and spindles are assembled at the factory and are packed with grease at that time. Refer to the Lubrication- Maintenance section of this manual for disassembly and service procedures.

Hub & Tire to Axle Tube

1. Lay the undercarriage out so the trolley is at the discharge end of the auger.
2. Raise and support the undercarriage axle tube just high enough to allow installation of the tire and rim.

   Apply a thin coat of anti-seize compound to the spindle and slide the hub and spindle assembly into the axle tube. Secure each spindle to the axle using one (1) 1/2" x 3 1/4" bolt and nylon locknut (See Fig. 34). Mount the tire and rim and secure using the lug bolts provided.

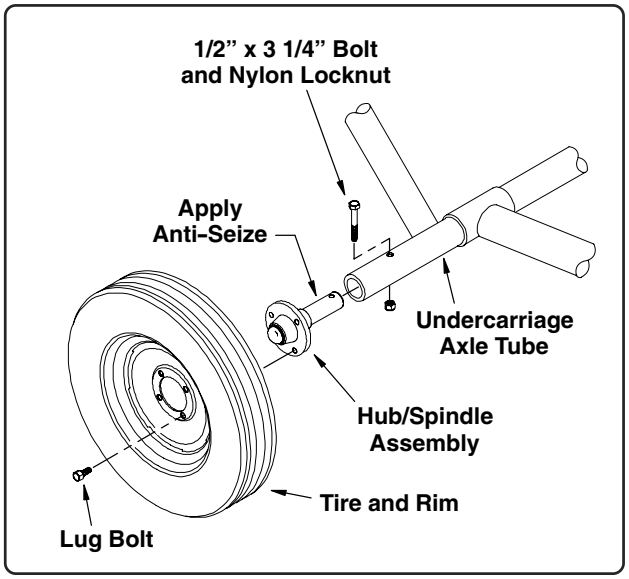

Fig. 34

Install Upper Trolley Stop

1. Lift the main auger assembly and position the discharge end of the auger above the trolley located on the end of the undercarriage (See Fig. 35).

   Align the trolley with the tracks and carefully slide the trolley onto the tracks (the tracks should be positioned between the rollers and the top lip of the trolley as shown in Fig. 35 below).

   Slide the trolley back far enough to allow the upper trolley stop to be mounted to the tracks.
2. Secure the upper trolley stop to the tracks using four (4) 1/2" x 1 1/2" bolts, flat washers and nylon locknuts (See Fig. 35).

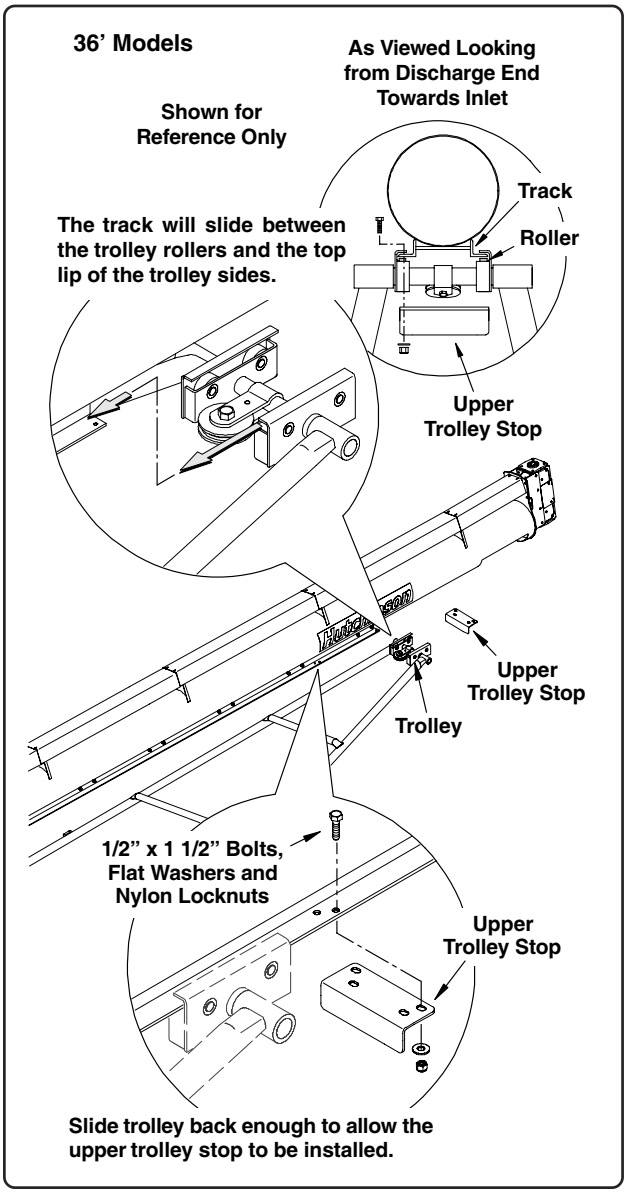

Fig. 35

UNDERCARRIAGE ASSEMBLY, 36' MODELS (con't.)

WARNING! The trolley will roll freely on the tracks. After upper trolley stop has been installed, secure the trolley to the stop to prevent it from rolling.
Be aware of pinch points during the assembly process. Use caution around these areas.

Wrap a chain or heavy strap around the trolley and upper trolley stop to prevent the trolley from rolling during the following assembly procedures.

1. Attach the lower arms of the undercarriage to the undercarriage mount as shown below. Secure the lower arms using two (2) 4/3" x 2 1/2" bolts, flat washers, bushings and nylon locknuts.

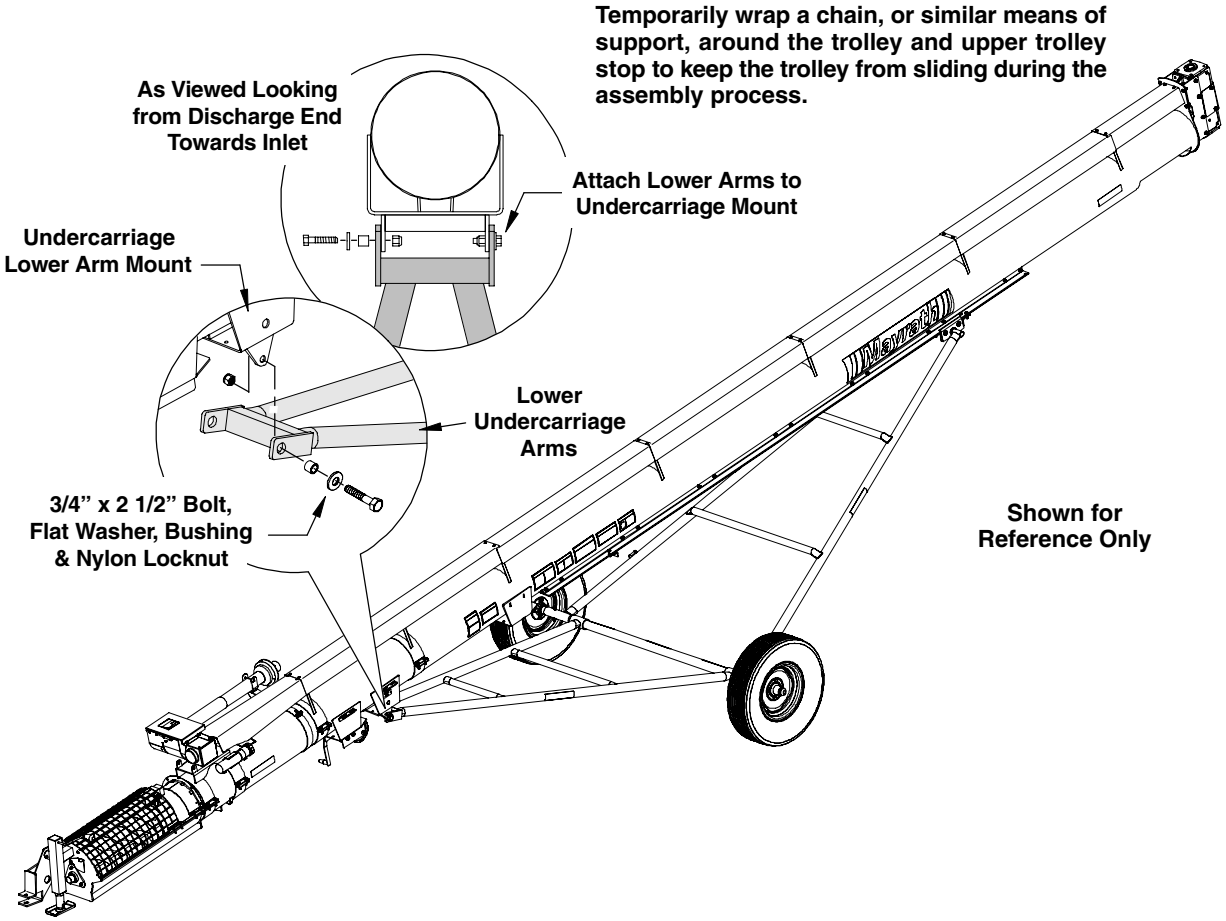

WHEEL HUB ASSEMBLY and INSTALLATION, 52', 62' & 65' MODELS

The hub and bearings may have been assembled at the factory, if they have been pre-assembled, continue with the undercarriage assembly beginning below.

If they have ***not*** been pre-assembled, refer to the axle hub and bearing assembly procedures outlined on Page 18 in the "Lubrication & Maintenance" section of this manual. Then continue with the following undercarriage assembly procedures.

UNDERCARRIAGE ASSEMBLY 52', 62' & 65' MODELS

CAUTION! Some of the undercarriage components are heavy, use assistance when assembling and lifting these parts.

Be aware of pinch points during the assembly process. Use caution when working around these areas.

When assembling the undercarriage, leave all bolts and hardware loose until all the components of the carriage have been installed.

Refer to the illustration on Page 51 for assistance with the assembly process and parts identification.

1. Bolt the axle (Ref. No. 1) to the lower arms using six 5/8" x 2" bolts and nylon locknuts (lower arms are Ref. No's. 2 and 3 and will bolt to the inside of the axle plate).
2. Bolt the longer cross brace tubes (Ref. No. 4) to the lower arms using four 1/2" x 1 1/2" bolts, flat washers and nylon locknuts (the cross braces have a hole offset to one end, position the hole towards the narrow end of the carriage).
3. Bolt the cross brace tubes together using one (1) 1/2" x 3 1/4" bolt and nylon locknut.
4. Attach the upper lift arms (Ref. No's. 5 and 6) to the lower arms. Secure using one 1" x 3" bolt, flat washer, spacer bushing (Ref. No. 11) and nylon locknut.
5. Bolt the shorter cross brace tubes (Ref. No. 7) to the upper lift arms using four 1/2" x 1 1/2" bolts, flat washers and nylon locknuts. Secure the cross brace tubes together using one 1/2" x 3 1/4" bolt and nylon locknut.
6. Attach the connecting brace tube (Ref. No. 8) to the bottom side of each lower arm as shown in the illustration on Page 51. Use two 1/2" x 1 1/2" bolts and nylon locknuts to secure into place.
7. Position the undercarriage beneath the conveyor housing. Move the trolley to the discharge end of the track until it is against the trolley stop. Use a clamp or some other means to temporarily secure the trolley to prevent it from sliding.
8. Install the pivot bushing (Ref. No. 9) into the trolley. Attach upper lift arms to trolley using one 1" x 11" bolt, and nylon locknut. Tighten bolt completely.
9. Tighten all bolts in the upper lift arm assembly, as well as the bolts that connect the upper and lower arms together.
10. Raise the conveyor with a hoist at a point about two-thirds of the distance toward the discharge end. Raise conveyor high enough to attach the lower arms to the mount on the conveyor housing.

    Secure each arm using one 1" x 3" bolt, one spacer bushing (Ref. No. 11), one flat washer and nylon locknut (flat washer and bushing under head of bolt, on inside of arm).
11. Install reflector brackets (Ref. No. 12) to the lower arms (near the axle) using two 5/16" x 1" bolts and nylon locknuts.
12. Tighten all lower arm assembly bolts and remove temporary clamp used to hold the trolley in place.
13. Mount the tire and rims (Ref. No. 13) to the axle hubs and secure using the lug bolts provided.

UNDERCARRIAGE ASSEMBLY, 62' & 65' MODELS (con't.)

52', 62' & 65' Models

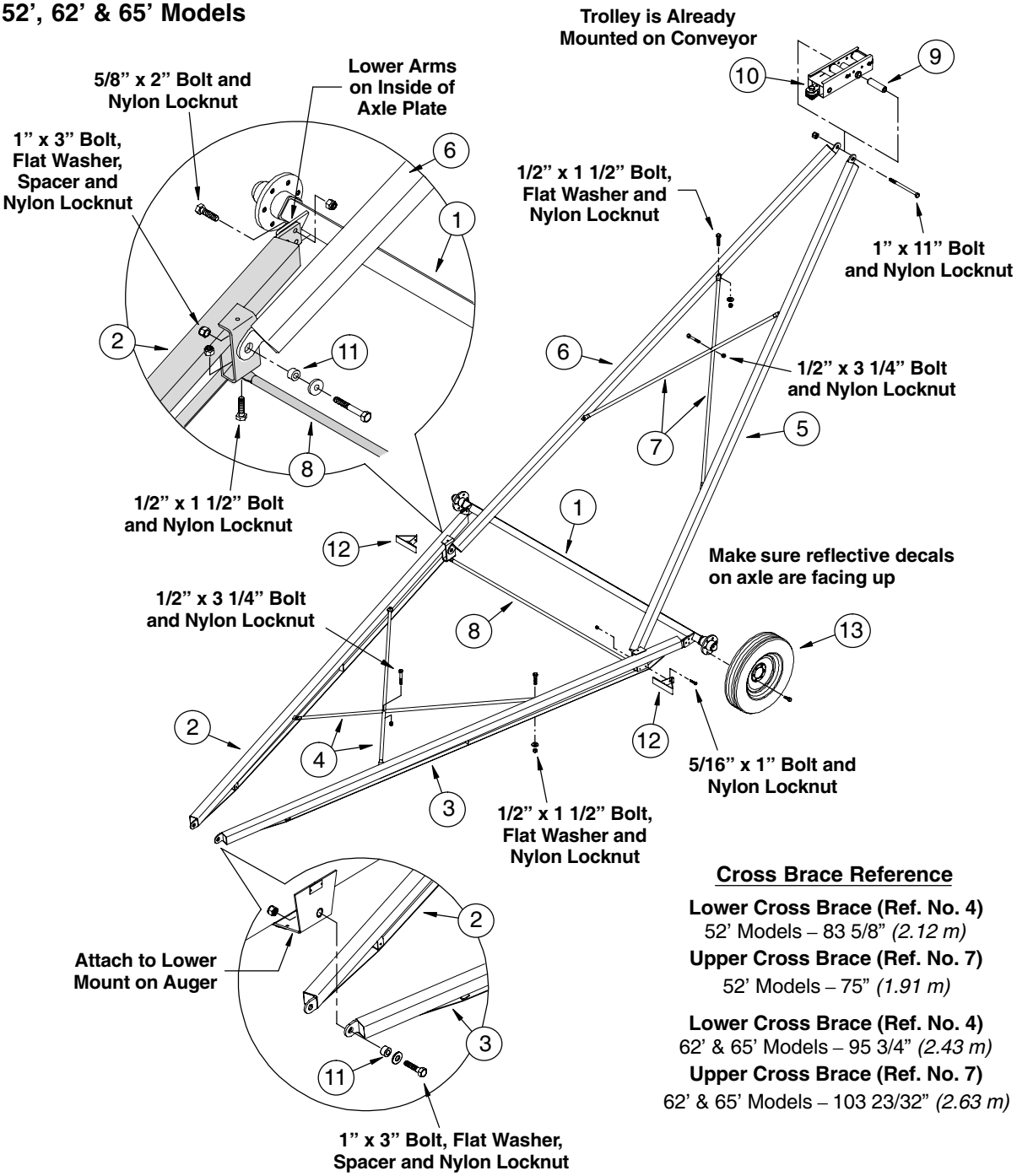

Cross Brace Reference

Lower Cross Brace (Ref. No. 4)
52' Models – 83 5/8" *(2.12 m)*
Upper Cross Brace (Ref. No. 7)
52' Models – 75" *(1.91 m)*

Lower Cross Brace (Ref. No. 4)
62' & 65' Models – 95 3/4" *(2.43 m)*
Upper Cross Brace (Ref. No. 7)
62' & 65' Models – 103 23/32" *(2.63 m)*

Shown for Reference Only

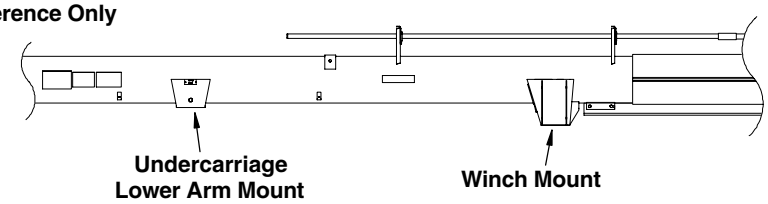

WINCH & WINCH CABLE INSTALLATION

Winch Installation for 36' Models

Install Hand Winch

WARNING! Keep hands away from winch drum during winch operation.

Never fully extend the cable, always keep three complete wraps of cable around the winch drum.

Never operate the winch with wet or oily hands, always use a firm grip on the handle.

1. Install the winch cable anchor onto the lower portion of the left-side track (the mounting hole is predrilled into the track, See Fig. 36 below).

   Secure cable anchor to the track using one 1 1/2" bolt and nylon locknut.

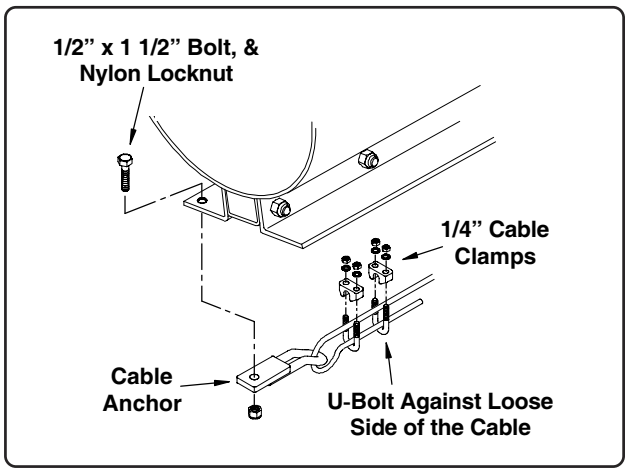

Fig. 36

2. Install the handle onto the winch. Remove the nut at the end of the threaded shaft on the side of the winch frame. Align the slot in the handle with the winch shaft and slide handle onto shaft. Secure the handle using the nut provided.

3. Attach the winch to the winch mount located closest to the inlet end of the auger (directly behind the undercarriage mount). The winch drum should be facing the discharge end of the auger.

   Secure the winch using three (3) 3/8" x 1" bolts, flat washers and nylon locknuts.

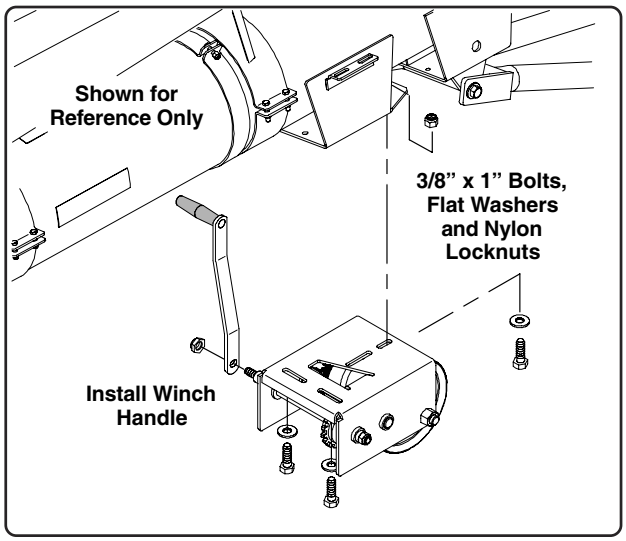

Fig. 37

4. Attach the 1/4" diameter *(6.5 mm)* lift cable to the winch drum so that as the handle is turned clockwise, the cable wraps from the top of the drum.

   Insert the cable from the inside of the drum. Pass cable through one of the round holes on the side of the drum until the cable extends approximately 1" *(25 mm)* past the two square holes in the drum side.

   Clamp the cable to the outside of the drum with the cable keeper and secure using two (2) 3/16" x 3/4" carriage bolts, lock washers and non-lock nuts (make sure the carriage bolt heads are inside of the drum).

   Keep the cable taut and turn handle to verify cable is winding onto the drum properly. Turn handle until the cable wraps around the drum three (3) times (See Fig. 38 on Page 53).

   CAUTION! The cable keeper alone will not hold the weight of the auger. There should be enough cable so that when the auger is in its full down position, there is a minimum of three (3) cable wraps around the winch drum. If there are not three wraps of cable around the winch drum when the auger is fully lowered, then the cable must be replaced with a longer one.

WINCH INSTALLATION, 36' MODELS (con't.)

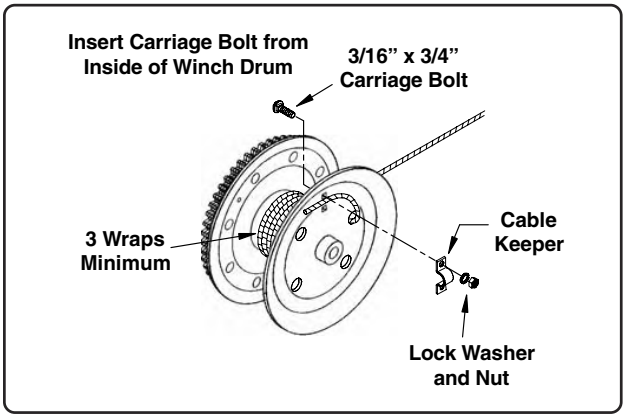

Fig. 38

5. Route the cable up to the trolley pulley, around the pulley and back down to the cable anchor on the left-side track.

   IMPORTANT! Make sure to route the cable over the *top* of the lower arm as shown below.

   Insert the end of the cable through the anchor and pull cable taut. Secure the cable using two 1/4" cable clamps (keep the u-bolt portion of the clamp against the loose end of the cable). Cut off excess cable if desired.

   Always keep slight tension on the lift cable even during storage and transport. With tension on the cable it will have a less likely chance of coming unraveled or getting twisted on the winch drum.

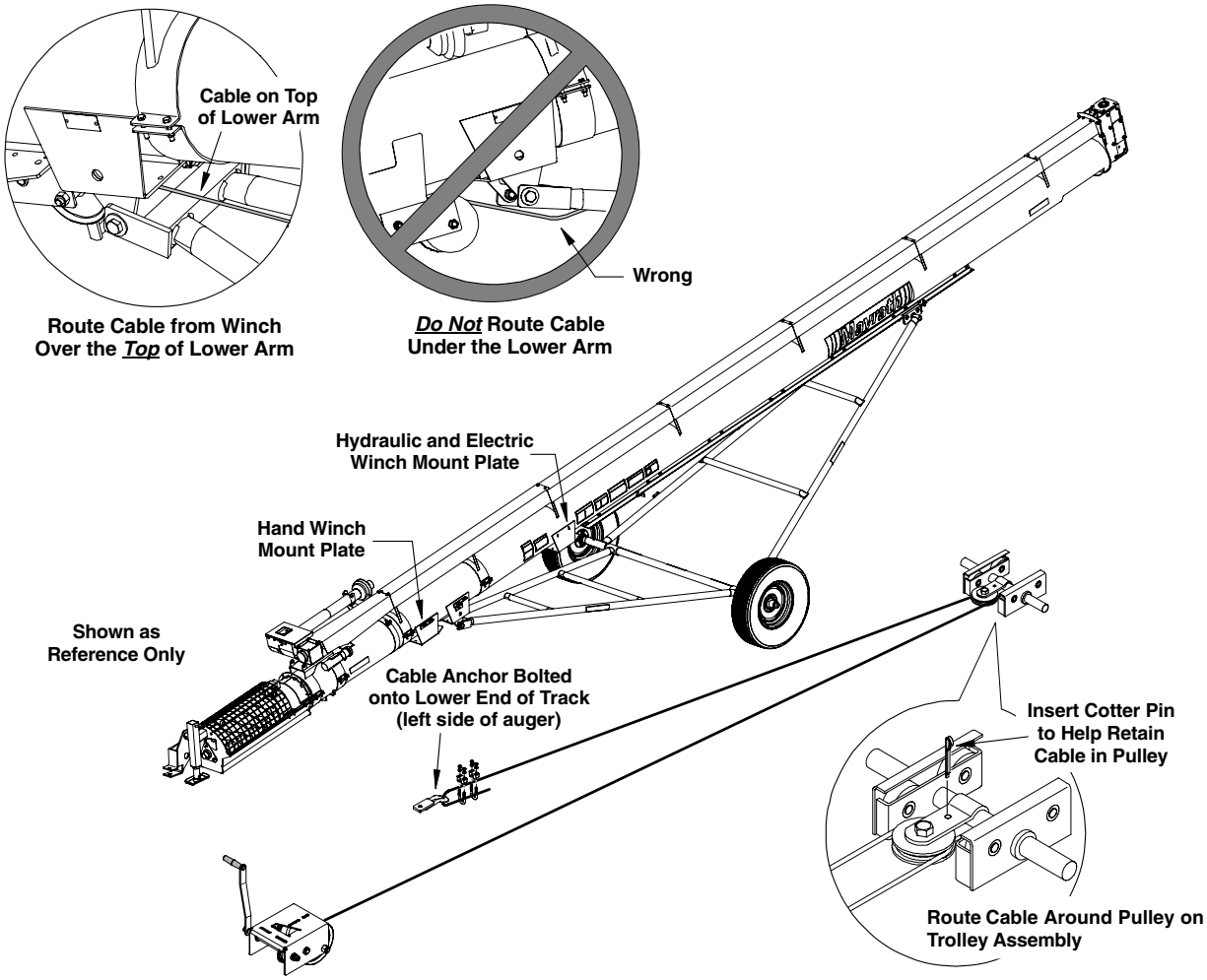

Cable Routing will be the Same for the Hydraulic, Electric and Hand Winch (ie. Route from Winch to Pulley on Trolley, Back Down and Secure to Cable Anchor Bolted to Track)

WINCH & WINCH CABLE INSTALLATION

Hand Winch Installation for 52' Models

Install Hand Winch

WARNING! Keep hands away from winch drum during winch operation.

Never fully extend the cable, always keep three complete wraps of cable around the winch drum.

Never operate the winch with wet or oily hands, always use a firm grip on the handle.

1. Install the hand winch on the 52' Models to the winch mount using 3/8" x 1" bolts, flat washers and nylon locknuts (flat washers on the bottom side of the slotted holes on the winch) The bolt on the rear right hand side of the winch will also have a flat washer on the top side of the winch mount, See Fig. 36A.

   The winch will attach to the far left hand side of the winch mount (See Fig. 36A), this will allow the winch to protrude past the side of the mount so that the cable can be routed properly.

2. Install the handle onto the winch. Remove the nut at the end of the threaded shaft on the side of the winch frame. Align the slot in the handle with the threaded shaft and slide handle onto shaft. Secure the handle using the nut provided.

3. Attach the 5/16" dia. x 115' long *(8 mm x 35.05 m)* lift cable to the winch drum so that as the handle is turned clockwise, the cable wraps from the top of the drum.

   Insert the cable from the inside of the drum. Pass cable through one of the round holes on the side of the drum until the cable extends approximately 1" *(25 mm)* past the two square holes in the drum side.

   Clamp the cable to the outside of the drum with the cable keeper and secure using two (2) 3/16" x 3/4" carriage bolts, lock washers and non-lock nuts (make sure the carriage bolt heads are located on the inside of the drum).

   Keep the cable taut and turn handle to verify cable is winding onto the drum properly. Turn handle until the cable wraps around the drum three (3) times (See Fig. 37A on Page 55).

CAUTION! The cable keeper alone will not hold the weight of the auger. There should be enough cable so that when the auger is in its full down position, there is a minimum of three (3) cable wraps around the winch drum.

If there are not three wraps of cable around the winch drum when the auger is fully lowered, then the cable must be replaced with a longer one.

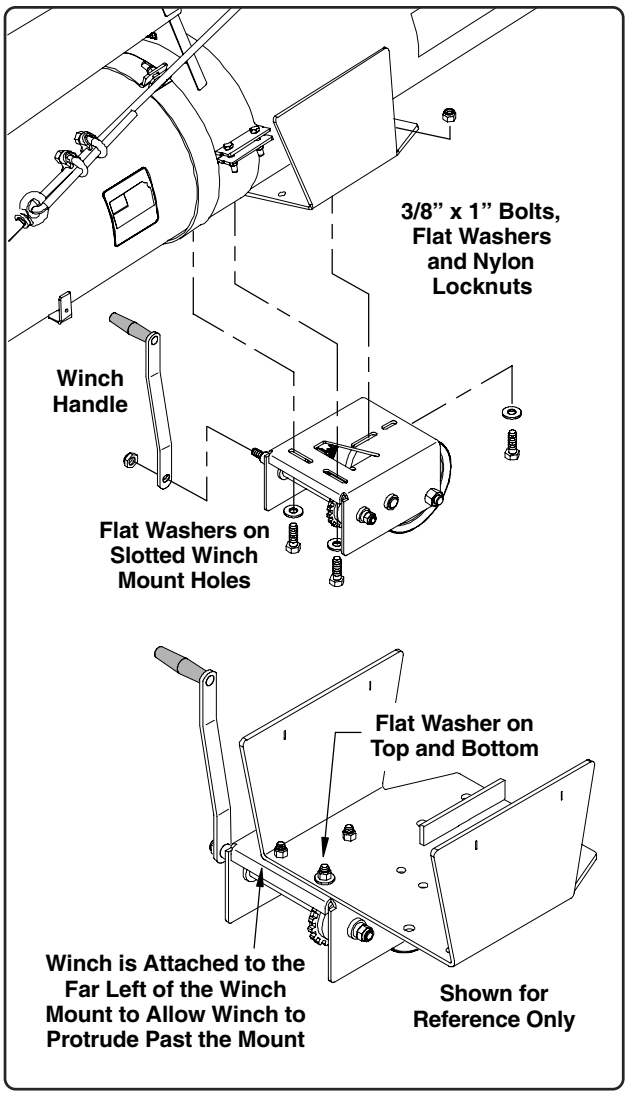

Fig. 36A

Hand Winch Installation for 52' Models (con't.)

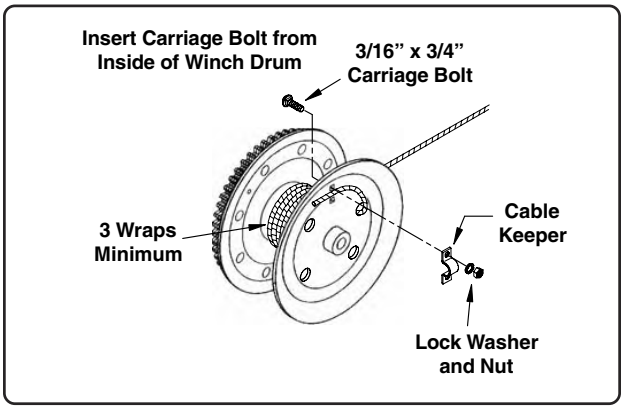

Fig. 37A

For the 52' Models, the lower pulley assembly will need to be assembled and installed.

1. Slide the pulley clevis onto the winch anchor pipe located on front of the winch mount plate (the bolt stop welded to the clevis needs to be positioned facing down).

   Stack the two pulleys, bushing and spacer washer as shown in Fig. 38A. Install this assembly to the end of the clevis and secure using one 1" x 3 1/2" bolt and nylon locknut **(make sure the bolt head is against the bolt stop welded to the bottom side of the clevis).**

   Install the 1/4" x 3" cotter pin as shown (there may be some applications that will use a 1/4" x 3" bolt instead of the cotter pin).

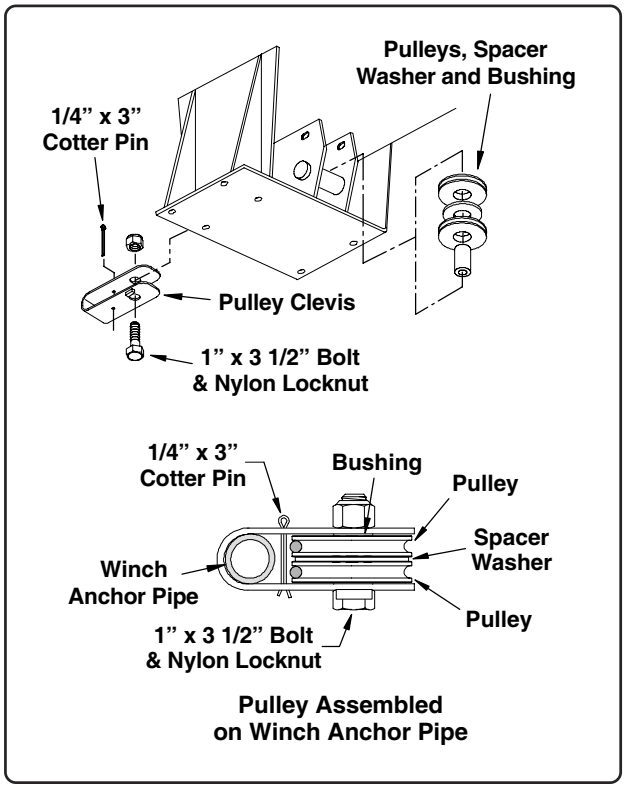

Fig. 38A

Hand Winch Installation for 52' Models (con't.)

Route Lift Cable

1. Route the cable up to the trolley pulley's passing the cable through the left side of the winch mount (See illustration below).

   Wrap the cable around the bottom trolley pulley, back down and around the bottom pulley on the pulley-clevis assembly on front of the winch mount.

2. Now route the cable back up and around the top trolley pulley, back down and around the top pulley on the pulley-clevis assembly, and up again to the anchor bushing on the trolley.

3. Pull excess slack from the cable and secure the cable end to the anchor bushing using two 1/2" cable clamps. Make sure the u-bolt portion of the clamp is against the loose end of the cable.

   Ensure the cotter pins are in place to secure the cable around each pulley, See illustration below.

   Always keep slight tension on the lift cable even during storage and transport. With tension on the cable it will have a less likely chance of coming unraveled or getting twisted on the winch drum.

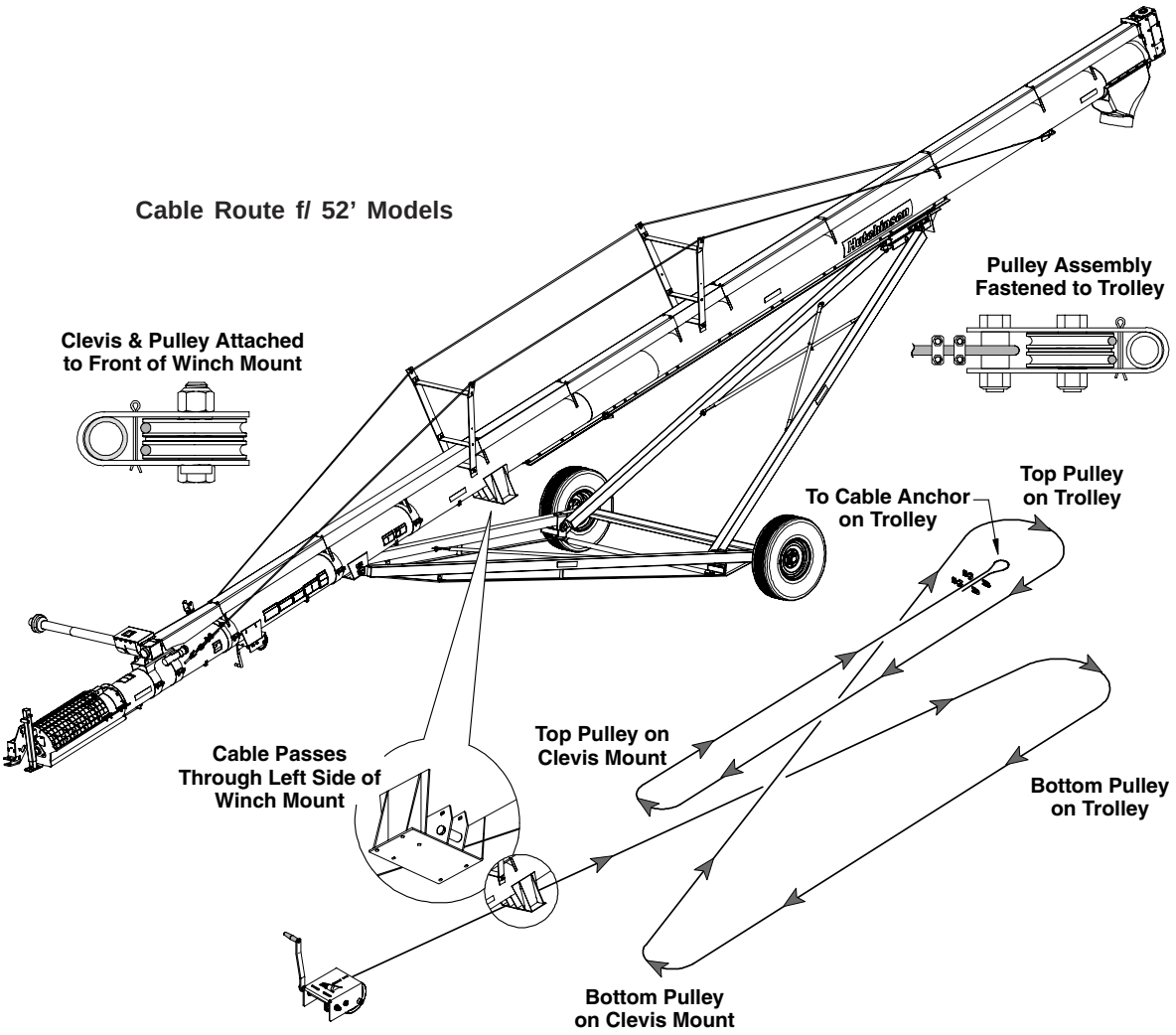

HYDRAULIC AND ELECTRIC WINCH
36', 52', 62' & 65' MODELS

WARNING! **Keep hands, hair and clothing away from moving parts.**

Do Not use hands to guide the cable onto the winch drum during winch operation.

When raising or lowering the auger, be aware and avoid overhead obstructions and electrical power lines.

Watch cable to see that it is properly winding onto the winch drum.

Never fully extend the cable, always keep three (3) complete wraps of cable around the winch drum.

Keep all guards and shields in place.

Do Not operate winch with kinked or damaged cable.

Do Not continue to raise auger after undercarriage trolley reaches track stop.

Shut off and lock out power source to adjust, service or clean.

The following procedures can be used for the 36', 52', 62' and 65' Models.

Both the hydraulic and electric winch will mount in the same location and in the same manner on each respective model.

The hydraulic winch will operate in either direction. This depends on which port is connected to pressure. If the drum should rotate in the opposite direction desired, simply reverse the hydraulic hoses on the relief valve.

Note: The direction of drum rotation should be so that the cable wraps around the drum in the same direction as it was attached to the drum.

The electric winch will operate in either direction by depressing the "Forward" or "Reverse" buttons on the pendant control (Refer to Page 21 for winch operation using the pendant control).

The hydraulic and electric winch have been shipped with oil already installed at the factory. Refer to Pages 19 & 20 for proper filling and oil level checks.

The hydraulic and electric winch kits are shipped with a winch adapter plate. **This plate will be used for the electric winch on 36' Models, and on both the hydraulic and electric winches for the 52' thru 65' Top Drive Models.**

1. Remove and retain the four (4) 1/2" x 1 1/4" bolts and nylon locknuts securing the top plate to the winch sides.

For 36' Models with Hydraulic Winch: Attach top plate to the winch mount on the main auger housing using four (4) 1/2" x 1 1/2" bolts and nylon locknuts (mounts in same location as electric winch).

36' Models w/ Electric Winch: Attach top plate and winch adapter plate to the winch mount using four (4) 1/2" x 1 3/4" bolts and nylon locknuts (See Fig. 39).

For 52', 62' & 65' Models: Attach the winch adapter plate to the winch mount using six (6) 1/2" x 1 1/2" bolts and nylon locknuts (See Fig. 39A on Page 58).

Attach the top plate to the adapter plate using four (4) 1/2" x 1 3/4" bolts and nylon locknuts (install bolts from bottom side of top plate).

Note the guide pin welded to the bottom side of the top plate. This will be inserted into the center of the winch drum during reassembly.

2. Reattach the winch body to the top plate using the four (4) 1/2" x 1 1/4" bolts and nylon locknuts that were previously removed. Make sure the guide pin is inserted into the winch drum.

Winch Attachment for 36' Models

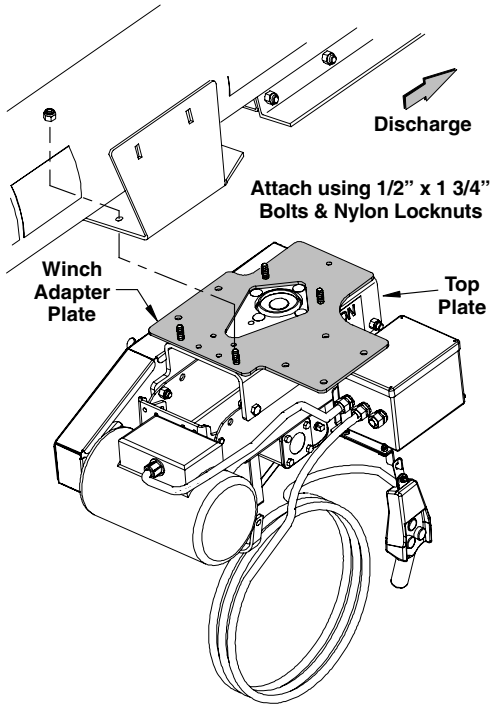

Attach Hydraulic Winch using 1/2" x 1 1/2"
Bolts & Nylon Locknuts
Hydraulic Winch will not use the Adapter Plate

Fig. 39

HYDRAULIC & ELECTRIC WINCH (con't.)

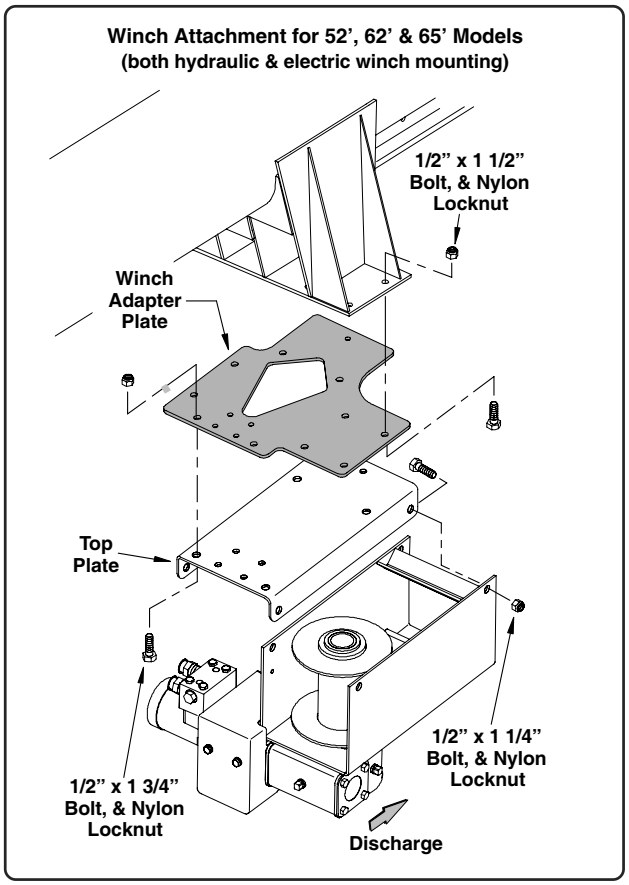

Fig. 39A

3. Make three (3) wraps of cable around the winch drum, then insert the cable end into one of the larger holes on the winch drum (it may be necessary to loosen the setscrew in the opening to allow the cable to slide into it). **Make sure the cable is wrapped around the drum in the same direction as it was attached (See Fig. 40).**

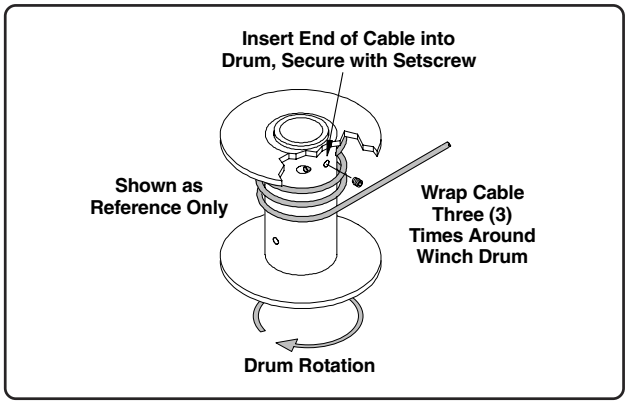

Fig. 40

4. Tighten the setscrew to secure end of cable to winch drum. Keep a bit of tension on the cable to help it stay wrapped around the drum.

Route Lift Cable

For 36' Models, route the cable from the winch up around the trolley pulley and back down to the cable anchor located at the lower portion of the left-side track as shown on Page 53.

For 52', 62' & 65' Models, the lower pulley assembly will need to be assembled and installed.

1. Slide the pulley clevis onto the winch anchor pipe located on the winch mount plate (the bolt-stop welded to the clevis needs to be facing down).

   Stack the two pulleys, bushing and spacer washer as shown in Fig. 41. Install this assembly to the end of the clevis and secure using one 1" x 3 1/2" bolt and nylon locknut (bolt head against the bolt-stop welded to the bottom of the clevis).

   Install the 1/4" x 3" cotter pin as shown (there may be some applications that will use a 1/4" x 3" bolt instead of the cotter pin).

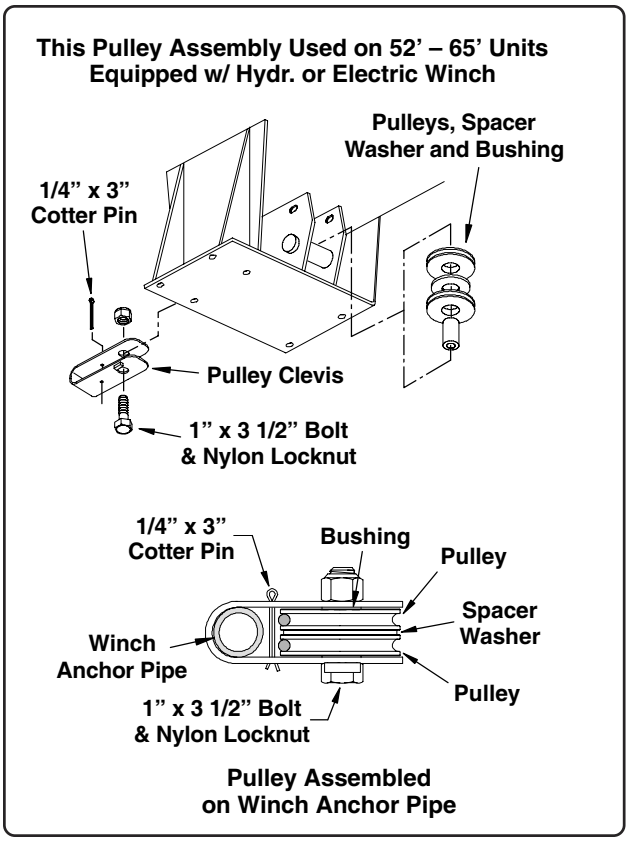

Fig. 41

ROUTE LIFT CABLE (con't.)

2. From the winch, route the cable up and around the bottom trolley pulley, back down and around the bottom pulley on the lower pulley assembly. Now route the cable back up and around the top trolley pulley, back down around the top pulley on the lower pulley assembly and up again to the anchor bushing on the trolley.

   Pull excess slack from the cable and secure the cable end to the anchor bushing using two 1/2" cable clamps. Make sure the u-bolt portion of the cable clamp is against the loose end of the cable as shown below.

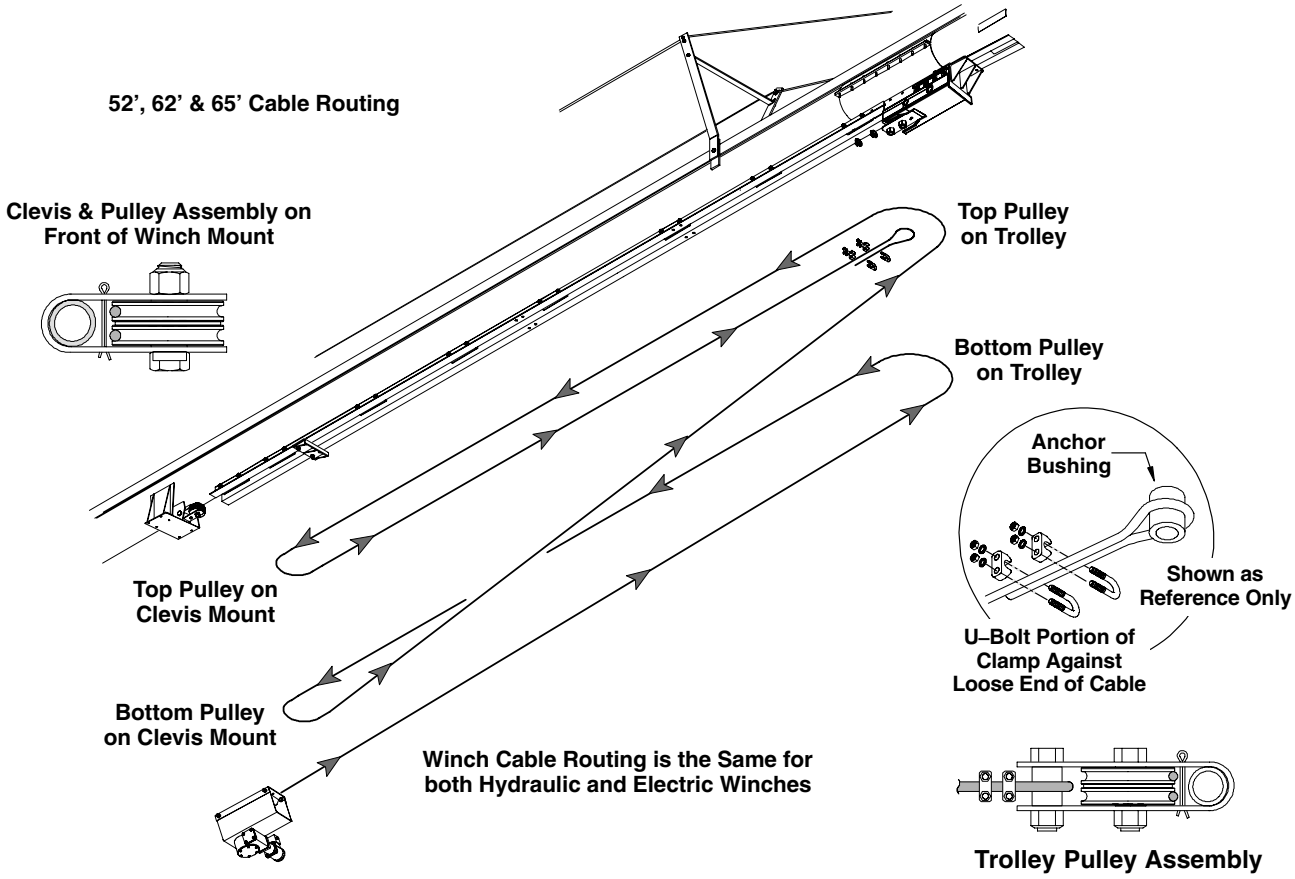

HYDRAULIC HOSE INSTALLATION
36', 52', 62' & 65' MODELS

WARNING! Hydraulic systems are highly pressurized. Do Not connect or disconnect hydraulic components when there is pressure within the system.

Escaping hydraulic oil, even an invisible pin hole leak can penetrate body tissues and cause serious injury.

Use a piece of wood or cardboard when searching for leaks, Never use your hands or other parts of your body.

If injured by hydraulic oil escaping under pressure, see a doctor immediately. Serious infection or reaction can occur if medical attention is not received at once.

IMPORTANT! Keep hydraulic hoses away from moving parts and pinch points. Allow hoses to coil in their original shape.

Avoid pinching or twisting the hoses that would otherwise restrict the flow of hydraulic oil.

1. Install the 90° elbows into the fittings on the relief valve facing towards inlet end of auger. Apply thread sealant or equivalent to the threads on the hose ends and attach hoses to the elbow fittings.

   On 36' Models, route the hoses to the right side of the auger and pass them through the undercarriage mount and through the hand winch mount.

   On 52', 62' & 65' Models, route the hoses from the hydraulic valve to the right side of the auger and pass them through the undercarriage mount.

   There are hose clamp mounting brackets welded to the auger housing along the lower portion of the housing (one bracket on 36' Models). Attach the hoses to the brackets using the provided hose clamps and the 5/16" x 3/4" bolts as shown below.

   After the hoses have been properly secured, it is good practice to always keep the excess length of hoses attached to the auger. This will help prevent damage to the hoses during storage and transport.

   The fittings on the hoses should also be covered, not only to keep dirt and other contaminants from collecting in the fittings, but to protect the threaded portion of the fittings as well.

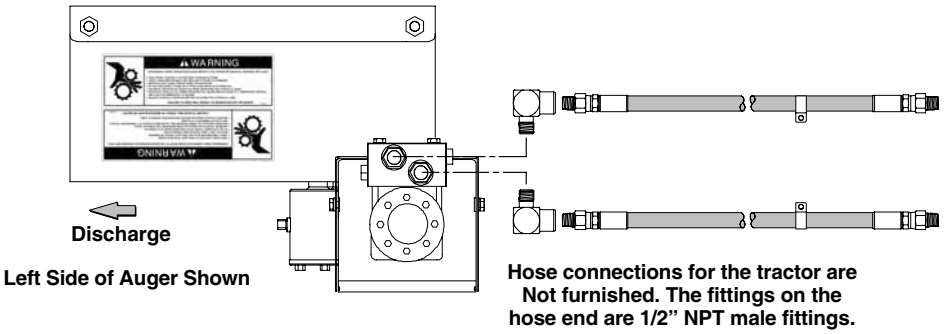

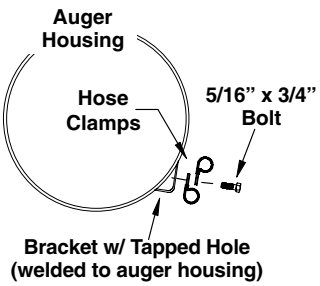

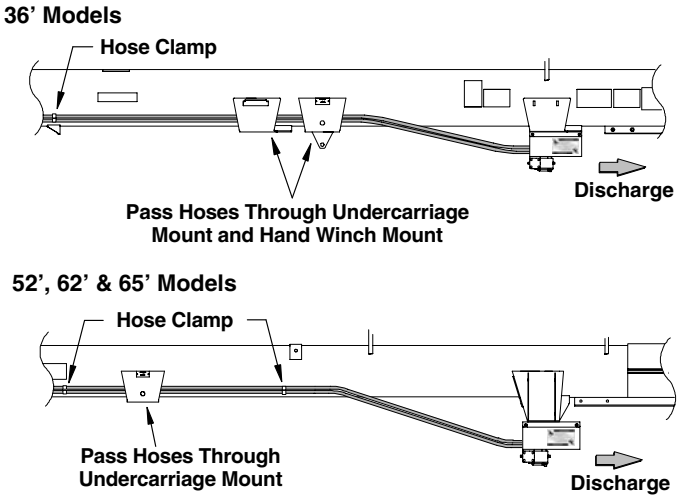

OPTIONAL INLET HOPPER (COLLAPSIBLE)

1. Install the filler plate to the front side of the inlet hopper as shown below. Secure using five (5) 5/16" x 3/4" bolts, flat washers and nylon locknuts (bolt heads from the inside, flat washers on outside of plate).
2. There is a right and left side panel with hinged doors and a long hinge along the bottom edge of the side panel (note the angle of the panels, position the lowest part of the angle towards the discharge end). Secure the long hinge to the inlet using 5/16" x 1 1/4" elevator bolts, flat washers and nylon locknuts. **IMPORTANT! Do Not open the hinge completely when attaching to the inlet. The hinge will be partially open with the bolt inserted through the folded side of the hinge, See illustration below.**
3. Locate the chain door strap from the hardware box, the chain has a 5/16" bolt and pin welded to it (see illustration below). Remove the nylon locknut from the bolt and secure the chain strap to the top of the left side hopper panel.
4. Position the doors to form an enclosure and secure using the long pins provided. The bottom of the pins will be inserted into the tab welded to the filler plate and to the rear side of the inlet assembly. After inserting the pins, secure them using the attached hair pin (when secured, the hair pin will be below the lip of the hopper panel). The pins will be stored in the door panels when the hopper is in the folded transport position (refer to the following page, Page 62 for hopper transport and storage information).

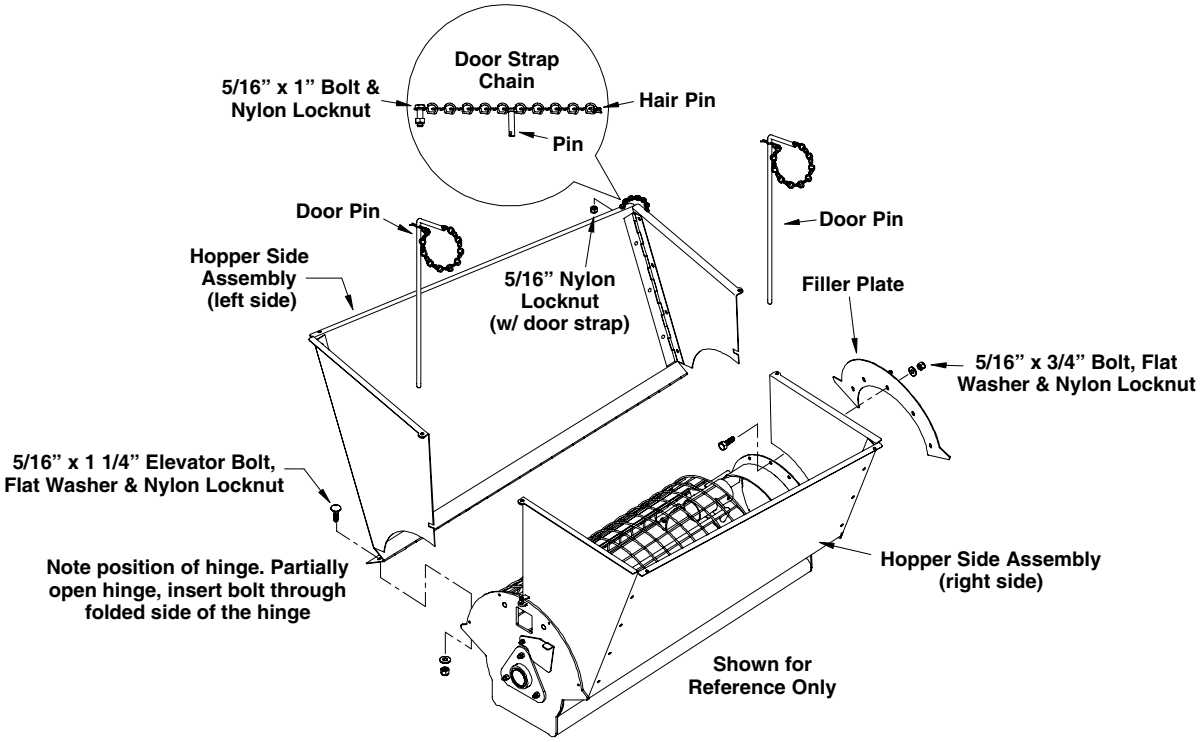

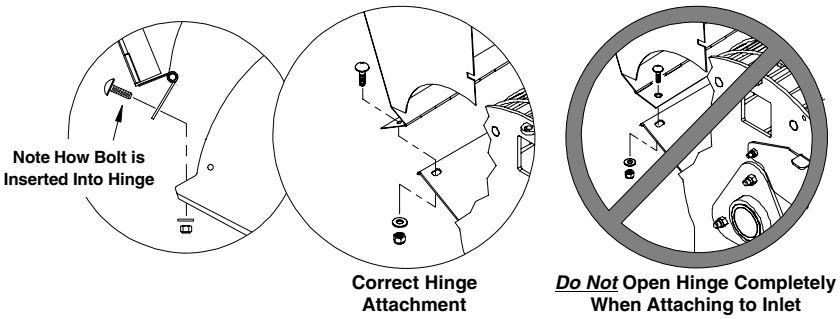

OPTIONAL INLET HOPPER, COLLAPSIBLE (con't.)

IMPORTANT! When hopper sides are extended, it is possible that they could become damaged during transport, especially when turning tight corners. To prevent this, the hopper sides should be folded inward when the auger is to be transported. The sides can also be folded inward when storing the auger as well.

1. To fold the hopper sides, remove the long pins from the front and rear doors of the hopper. Fold the doors inward. The long pins will be stored on the doors in the same manner as when the hopper sides are extended, insert the pin through the hole at the top of the door panel and through the lower tab on the door, secure using the attached hairpin (see illustration below).
2. After the doors are folded inward, tilt the hopper sides towards the center of the inlet assembly and using the chain strap and pin, secure the hopper panels as shown in the illustration below.
3. Reverse these procedures to extend the hopper sides when setting up the auger for operation.

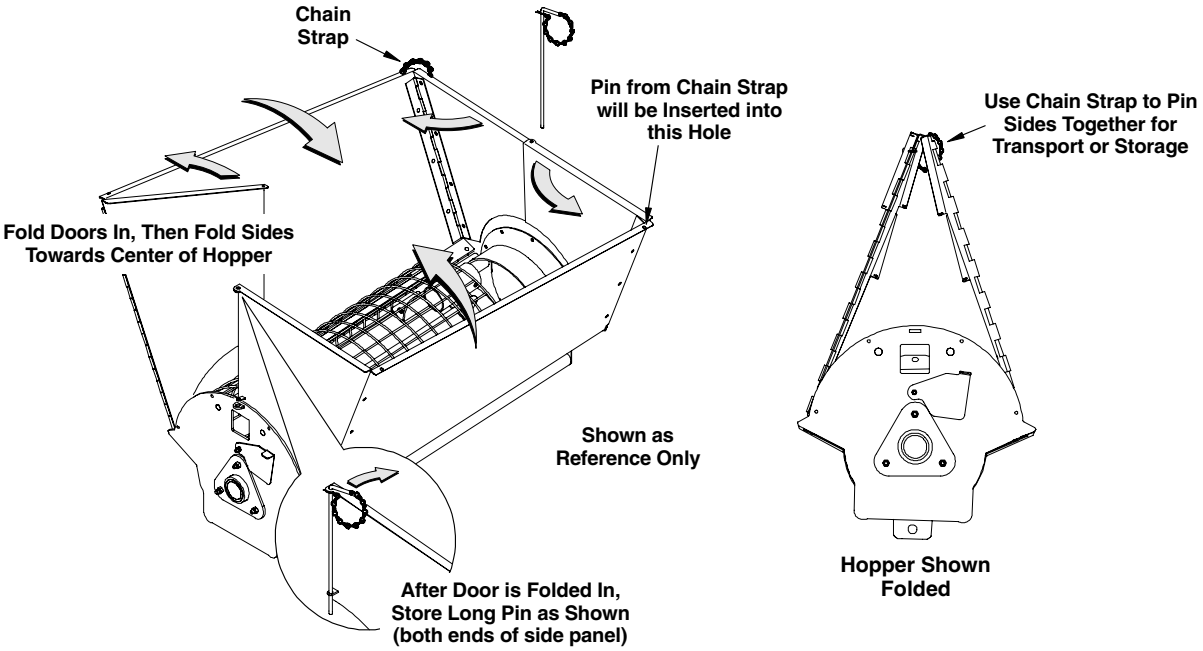

OPTIONAL INLET HOPPER (FLEXIBLE)

1. Using twelve (12) 5/16” x 3/4” carriage bolts, flat washers and nylon locknuts, secure the flex hopper weldment to the auger intake assembly (See illustration below).
2. Install the back fill panel to the front side of the inlet hopper as shown in the illustration below. Secure the panel using five (5) 5/16” x 3/4” bolts, flat washers and nylon locknuts (bolt heads from the inside, flat washers on outside of fill panel).

   Secure the rear side of the flex hopper to the auger intake using four (4) 1/4” x 3/4” carriage bolts and nylon locknuts and one (1) 1/4” x 3/4” bolt and nylon locknut (the bolt will be used in the upper middle hole, the carriage bolts will be used in the four slotted holes, two on each side of the bolt).
3. Position the rubber boot at the top of the flex hopper as shown in the illustration below. Attach the rubber boot to the inside of the hopper using the 1” x 40” *(25 mm x 1.02 m)* and 1” x 28” *(25 mm x 71.1 cm)* long clamp strips and the 1/4” x 3/4” bolts, flat washers and nylon locknuts (the longer clamp strips are used to secure the sides, the shorter strip on the rear, flat washers over slotted holes on clamp strips).
4. Attach the support angles, upper clamp strips and corner clamps onto the top portion of the rubber boot. Position the support angles to the inside of the rubber boot, the clamp strips onto the outside of the boot and the corner clamps to the outside of the clamp strip, See illustration below.

   Secure the angles and clamp strips using 1/4” x 3/4” bolts, flat washers and nylon locknuts.

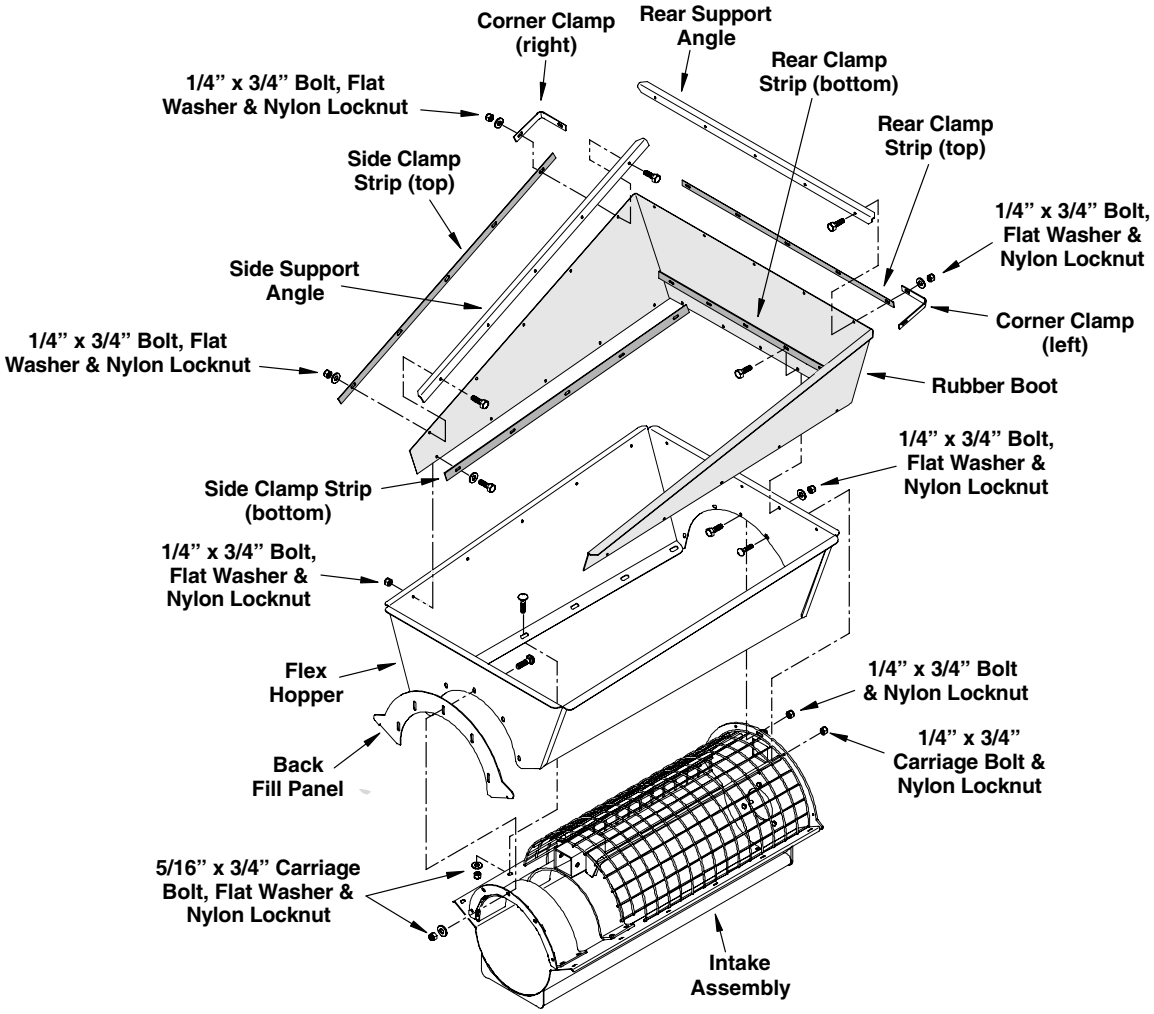

FLIGHT SECTION & HOUSING for UNITS with the OPTIONAL INTERNAL FLIGHT BEARINGS

The 36' units will already have the flight sections installed and the internal bearings already secured into place.

If the internal bearings on either the 36', 52', 62' or 65' units should ever need to be replaced, refer to the flight and internal bearing removal instructions on Page 65.

Install Flights & Internal Bearings

Follow the auger assembly procedures as outlined on Pages 24 to 28. The connecting bands and drive shaft assembly will be the same as shown on those pages. The only difference will be the connection of the flight sections (the bearing hanger will be installed between the flight sections as the sections are assembled). Refer to the following procedures for internal bearing and flight installation.

1. **Before connecting the flight sections together,** slide an internal bearing hanger onto the end of the flight connecting stub. Apply anti-seize compound to the connecting stub and attach the flight to the next flight section. Secure using two 5/8" x 4" bolts (blk) and side depress locknuts (See Fig. 42).

   NOTE: The flights are indexed to achieve a timed connection (a timed connection is where the flight pitch does not change across a connection, See Fig. 43).

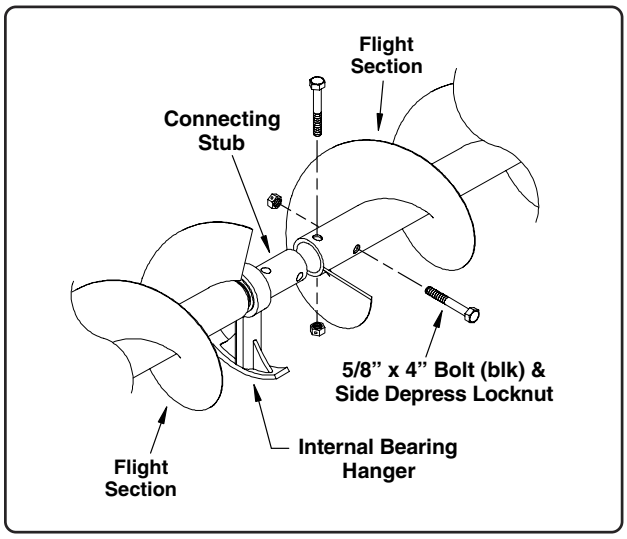

Fig. 42

2. Slide the tube sections and driveshafts together as outlined in the instructions on Page 28. After all tube and flight sections have been connected, the bearing hangers can be attached to the housing.

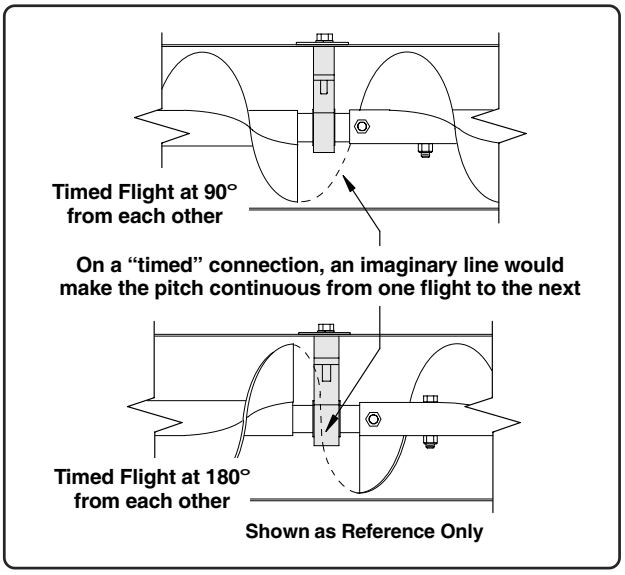

Fig. 43

3. A special "bearing positioning bar" has been provided to position the bearing hangers for assembly.

   Insert the end of the positioning bar with the "double bend" through the slot in the top of the housing and hook the bearing hanger stem. Rotate the stem upward as far as possible (See Fig. 44).

   Remove the positioning bar and insert the "L" shaped end into the slot. Hook the bearing hanger stem and pull upward to place the hanger in an upright position.

4. Position the bearing hanger so the mounting hole is visible through the slot in the housing.

   Adjust the hanger so it is centered between the ends of the flights. (See Fig. 45). This can be done by sliding the hanger back and forth through the slot to determine approximate center (there should be equal distance between each end of the flight and bearing).

5. Secure the bearing hanger using one mounting plate and one 5/8" x 1 1/2" bolt and lock washer (See Fig. 46). Repeat these steps for all remaining flights and bearing hangers.

INSTALL FLIGHTS & INTERNAL BEARINGS (con't.)

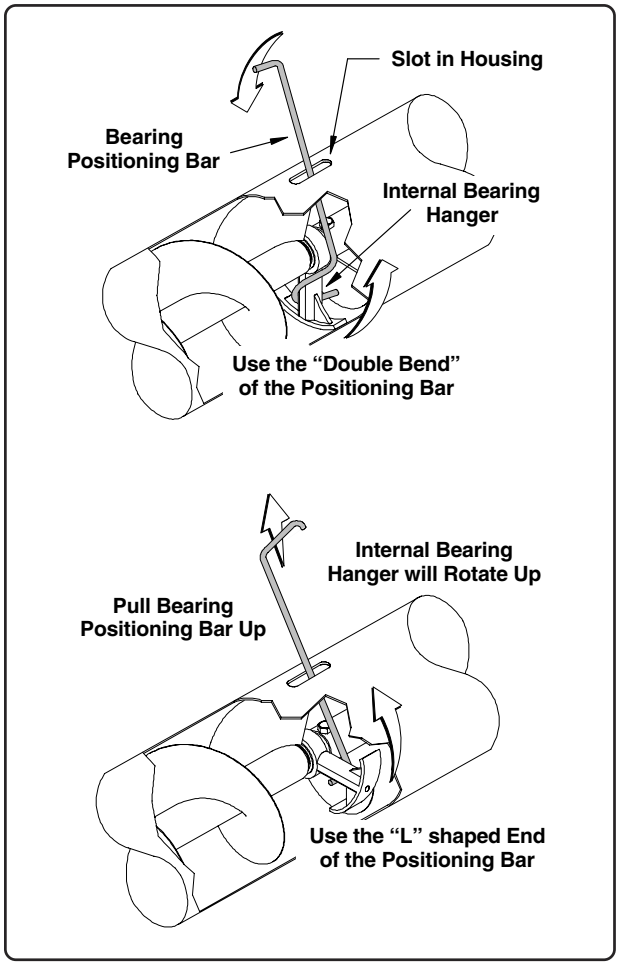

Fig. 44

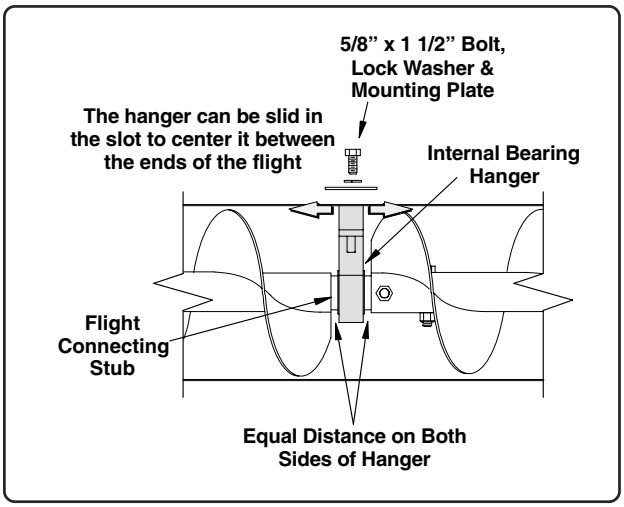

Fig. 45

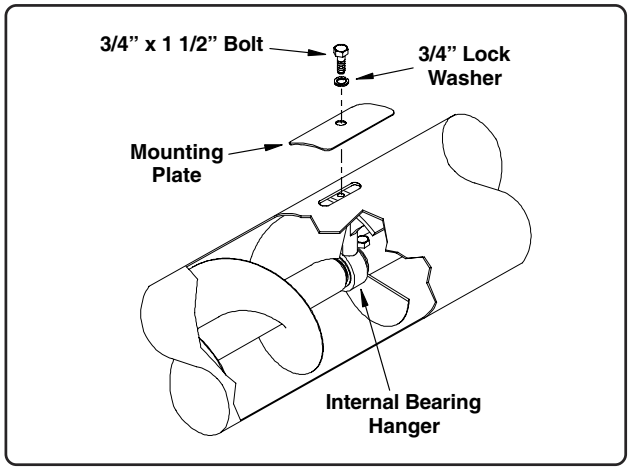

Fig. 46

Install Drive Shaft Covers

After all internal bearings have been installed, the drive shaft covers can be attached to the unit.

For proper installation procedures, refer to Pages 40 and 43. The sequence and covers shown are the same for both the standard auger models and models equipped with the internal bearing option.

Remove Flights & Internal Bearings

Place the auger in the full down position. Raise and support the inlet end of the auger so the inlet end is a little higher than horizontal.

Page 31 shows the procedures for installation of the intake hopper. These instructions can be reversed to assist with the removal of the intake hopper.

1. Remove the intake hopper to expose the lower flight section. Disconnect the head flight shaft from the gearbox shaft at the discharge end of the auger.
2. Remove and retain the bolts and mount plates securing the hanger bearings to the auger housing.
3. Pull the flight sections out of the auger. As each flight connection clears the auger housing, disconnect the flights from each other and remove the bearing hanger.
4. Replace the damaged bearing hanger and reinstall the flights and hangers. Refer to the previous instructions beginning on Page 64 for flight and bearing hanger installation.

   Reinstall the intake hopper and verify all hardware is tight and all parts are properly secured and in place.

PARTS LIST TABLE OF CONTENT

13” Portable Top Drive Auger
36’, 52’, 62’ & 65’ Models

Each Model is shipped with a **Main Box of Parts.** Each “Main Box of Parts” contains a box of parts for each of the auger groups shown below (except for the 13” x 36’ Model, this model contains only the “Main Box of Parts” - Part No. 1045450).

Main Box of Parts
13” x 62’ - 1045456
Grouped Box of Parts

62’ Undercarriage - 1045454
62’ Main Auger Tube - 1045452

Main Box of Parts
13” x 62’ w/ Internal Bearings- 1045459
Grouped Box of Parts

62’ Undercarriage - 1045454
62’ Main Auger Tube - 1045458

Main Box of Parts
13” x 65’ - 1045460
Grouped Box of Parts

65’ Undercarriage - 1045454
65’ Main Auger Tube - 1045452

Main Box of Parts
13” x 65’ w/ Internal Bearings- 1045463
Grouped Box of Parts

65’ Undercarriage - 1045454
65’ Main Auger Tube - 1045462

Main Box of Parts
13” x 52’ - 1046026
Grouped Box of Parts

52’ Undercarriage - 1045454
52’ Main Auger Tube - 1046028

Main Box of Parts
13” x 52’ w/ Internal Bearings - 1046025
Grouped Box of Parts

52’ Undercarriage - 1045454
52’ Main Auger Tube - 1046019

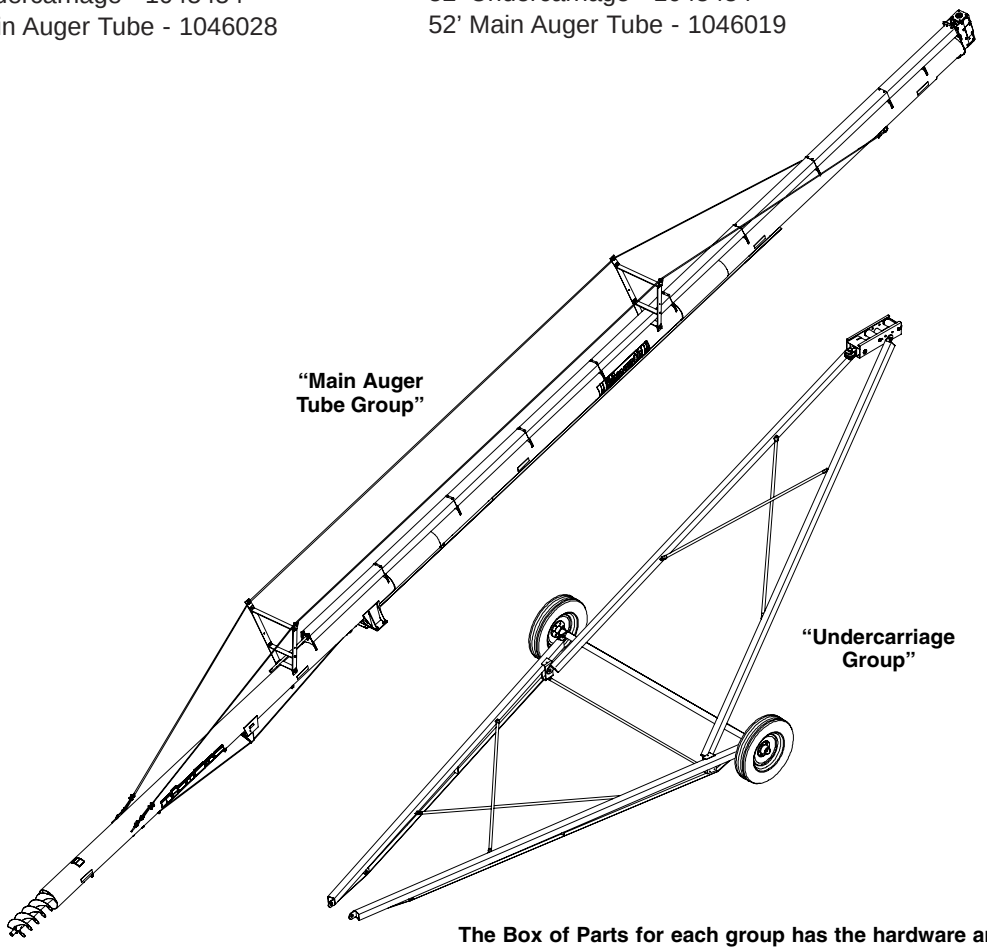

The Box of Parts for each group has the hardware and components used to assemble that specific group

SAFETY DECALS

13” x 36’ Top Drive Models

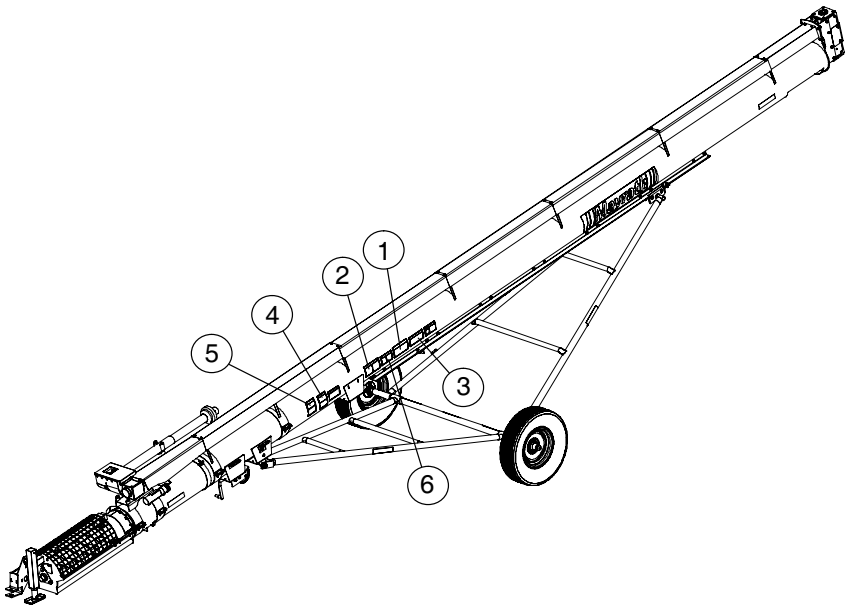

Ref. No.	Part No.	Description
1	1001973	Decal, Caution - General Statement
2	1001980	Decal, Danger - Beware of Power Lines
3	1001974	Decal, Warning - Escaping Hydraulic Oil
4	1001981	Decal, Danger - Upending Hazard...
5	1001985	Decal, Danger - Rotating Auger...
6	1001984	Decal, Danger - Do Not Attempt Disassembly

1

2

3

4

5

6

SAFETY DECALS

13” x 36’ Top Drive Models (con’t.)

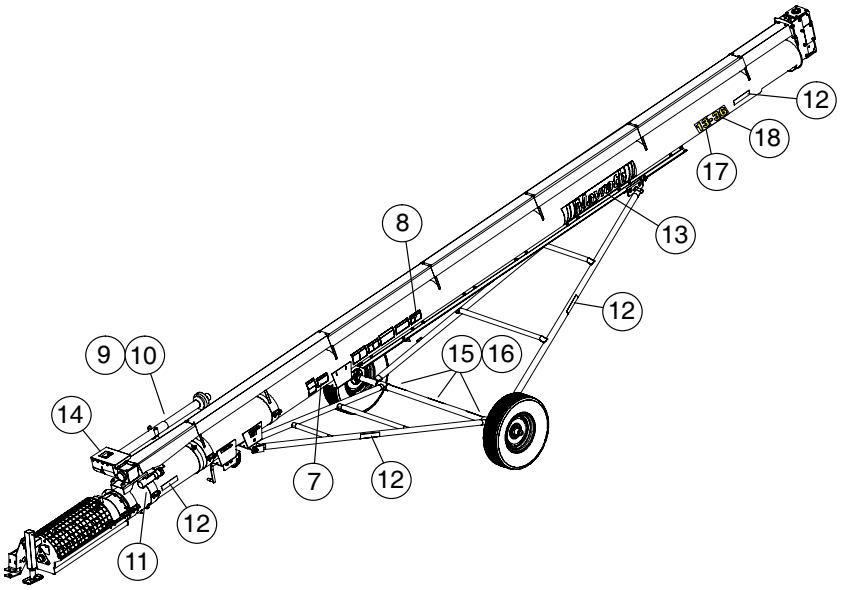

Ref. No.	Part No.	Description	Ref. No.	Part No.	Description
7	1001975	Decal, Warning - The Transport Width...	14	1041833	Decal, USA Flag
8	1005324	Decal, Danger - “Stop” If Any Guards...	15	1021179	Decal, Red Retro Reflective
9	13-10021	Decal, Danger - Rotating Driveline	16	1021181	Decal, Red/Orange Reflective
10	13-10022	Decal, Danger - Shield Missing	17	1048031	Decal, 13” Auger Dia. (Hutch)
11	1004461	Decal, Operator’s Manual Inside	(17)	1048628	Decal, 13” Auger Dia. (Mayrath)
12	1021180	Decal, Yellow Reflective	18	1048034	Decal, 36’ Auger Length (Hutch)
13	1001127	Decal, Hutchinson	(18)	1048631	Decal, 36’ Auger Length (Mayrath)
(13)	1009865	Decal, Mayrath			

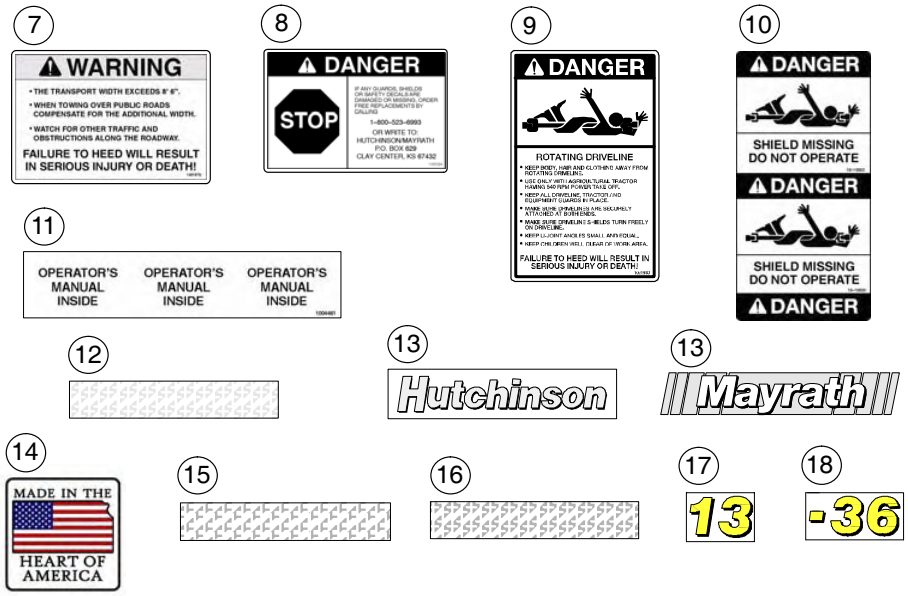

SAFETY DECALS

13” x 52’ Top Drive Models

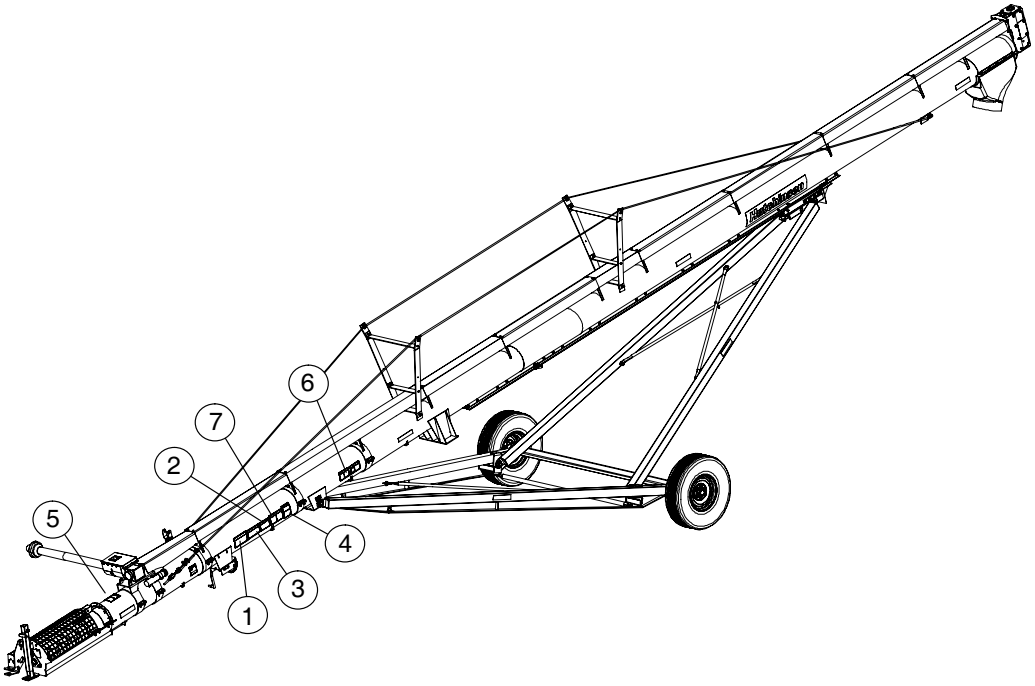

Ref. No.	Part No.	Description
1	1001973	Decal, Caution - General Statement
2	1001980	Decal, Danger - Beware of Power Lines
3	1001974	Decal, Warning - Escaping Hydraulic Oil
4	1001981	Decal, Danger - Upending Hazard...
5	1001985	Decal, Danger - Rotating Auger...
6	1001984	Decal, Danger - Do Not Attempt...
7	1001975	Decal, Warning - Transport Width

1

2

3

4

5

6

7

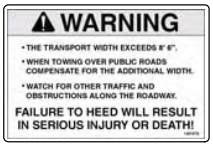

SAFETY DECALS

13” x 52’ Top Drive Models (con’t.)

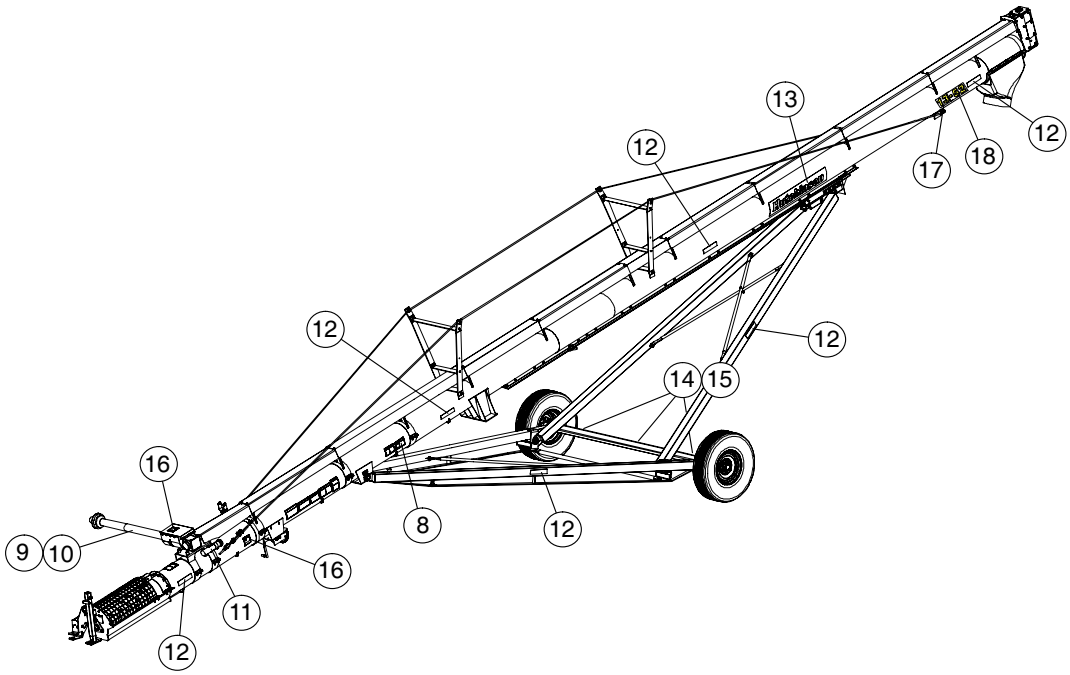

Ref. No.	Part No.	Description	Ref. No.	Part No.	Description
8	1005324	Decal, Danger - “Stop” If Any Guards...	14	1021179	Decal, Red Retro-Reflective
9	13-10021	Decal, Danger - Rotating Driveline	15	1021181	Decal, Red/Orange Reflective
10	13-10022	Decal, Danger - Shield Missing	16	1041833	Decal, USA Flag
11	1004461	Decal, Operator’s Manual Inside	17	1048031	Decal, 13” Auger Dia. (Hutch)
12	1021180	Decal, Yellow Reflective	(17)	1048628	Decal, 13” Auger Dia. (Mayrath)
13	1001127	Decal, Hutchinson	18	1048037	Decal, 52’ Auger Length (Hutch)
(13)	1009865	Decal, Mayrath	(18)	1048634	Decal, 52’ Auger Length (Mayrath)

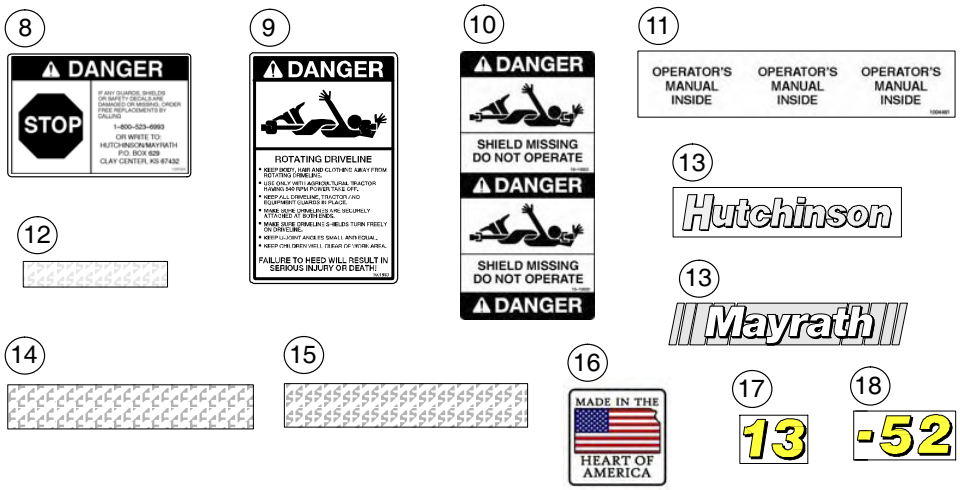

SAFETY DECALS

13” x 62’ Top Drive Model & 13” x 65’ Top Drive Models

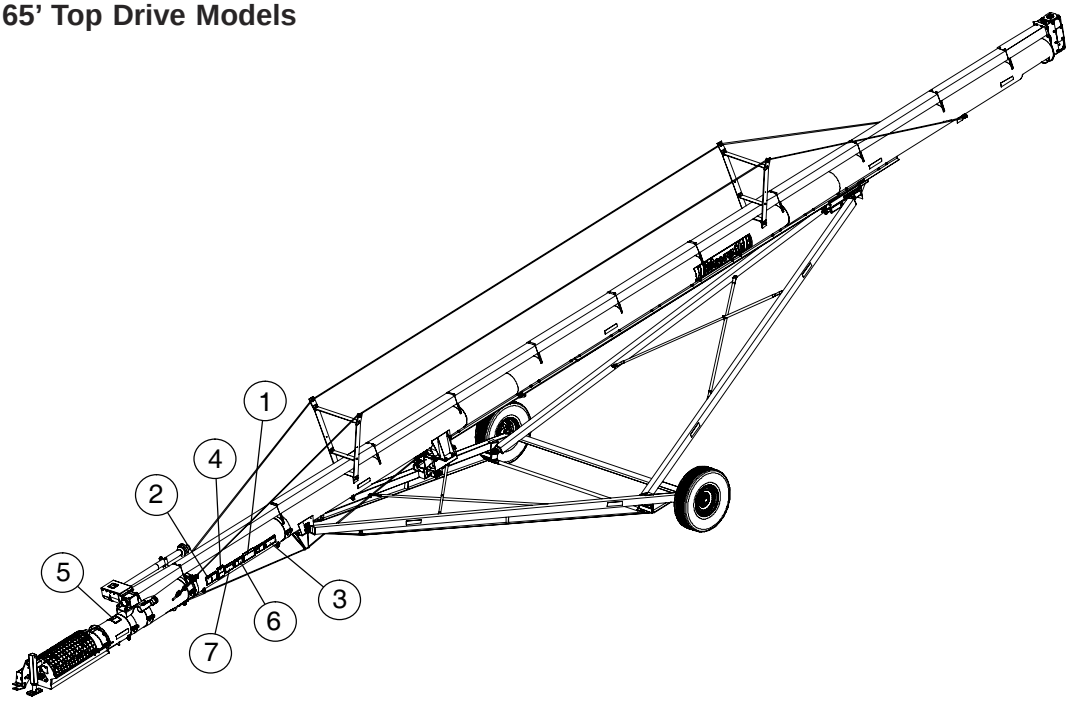

Ref. No.	Part No.	Description
1	1001973	Decal, Caution - General Statement
2	1001980	Decal, Danger - Beware of Power Lines
3	1001974	Decal, Warning - Escaping Hydraulic Oil
4	1001981	Decal, Danger - Upending Hazard...
5	1001985	Decal, Danger - Rotating Auger...
6	1001984	Decal, Danger - Do Not Attempt...
7	1001975	Decal, Warning - Transport Width

1

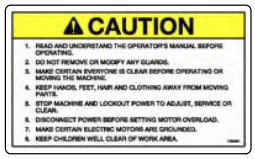

2

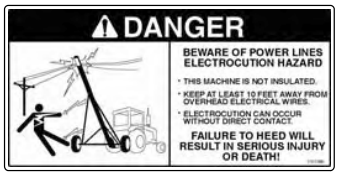

3

4

5

6

7

SAFETY DECALS

13” x 62’ Top Drive Models &
13” x 65’ Top Drive Models (con’t.)

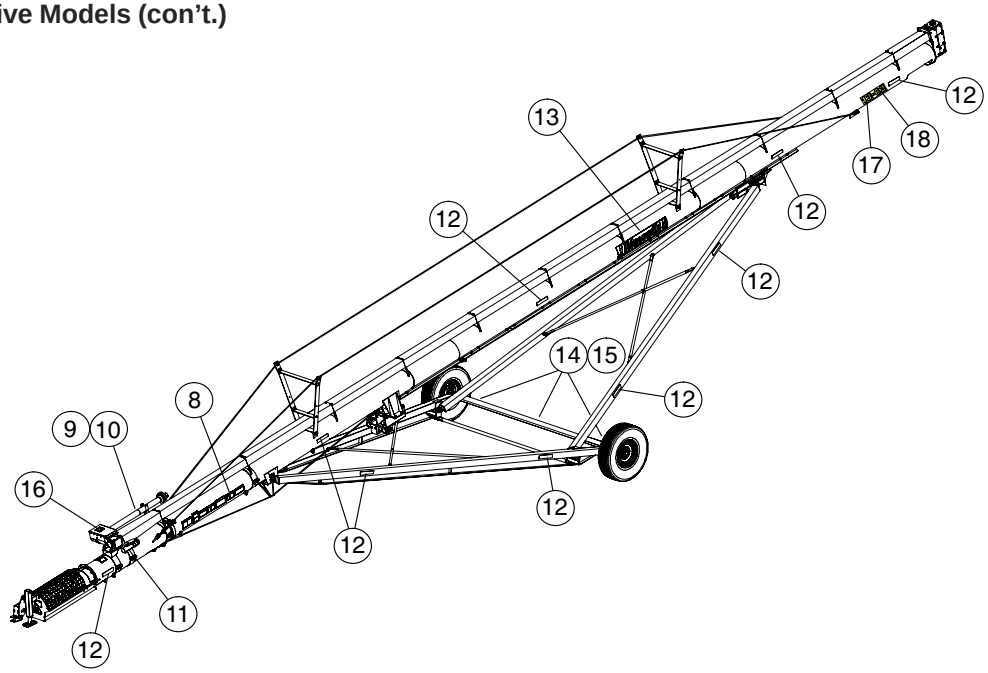

Ref. No.	Part No.	Description
8	1005324	Decal, Danger - “Stop” If Any Guards...
9	13-10021	Decal, Danger - Rotating Driveline
10	13-10022	Decal, Danger - Shield Missing
11	1004461	Decal, Operator’s Manual Inside
12	1021180	Decal, Yellow Reflective
13	1001127	Decal, Hutchinson
(13)	1009865	Decal, Mayrath
14	1021179	Decal, Red Retro-Reflective
15	1021181	Decal, Red/Orange Reflective
16	1041833	Decal, USA Flag
17	1048031	Decal, 13” Auger Dia. (Hutch)
(17)	1048628	Decal, 13” Auger Dia. (Mayrath)
18	1048039	Decal, 62’ Auger Length (Hutch)
(18)	1048636	Decal, 62’ Auger Length (Mayrath)
(18)	1048040	Decal, 65’ Auger Length (Hutch)
(18)	1048637	Decal, 65’ Auger Length (Mayrath)

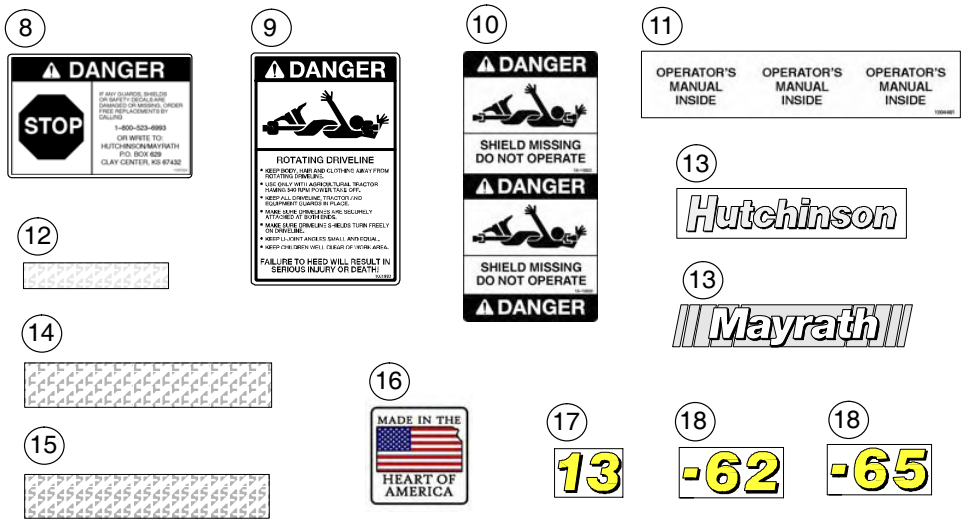

MAIN AUGER COMPONENTS
36' & 52' MODELS

36' Model

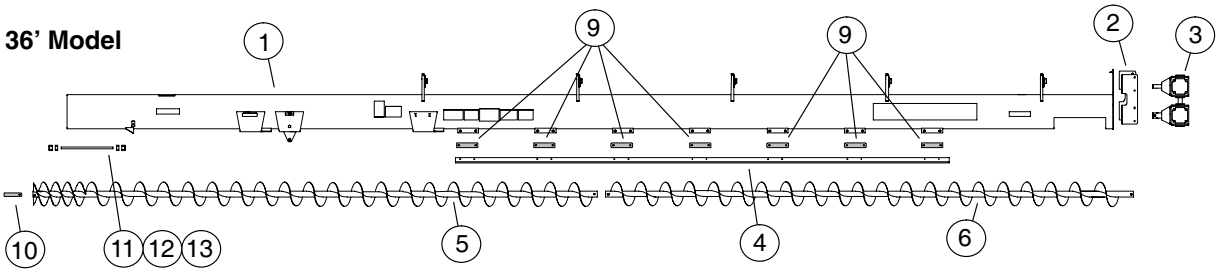

52' Models

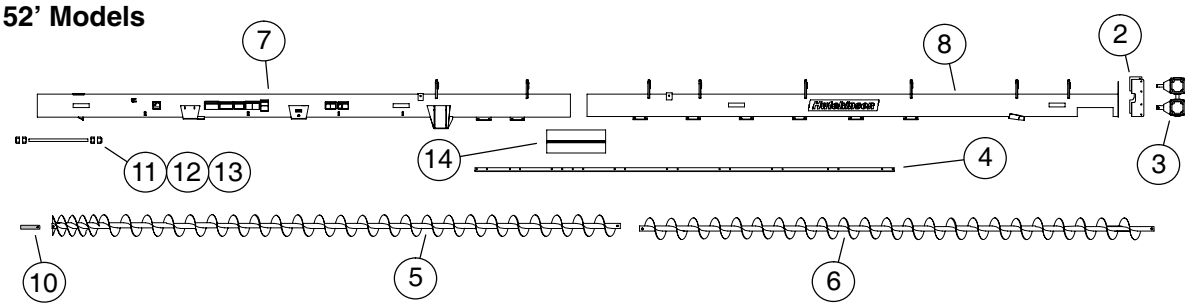

All Items listed are used with both the 36' & 52' Models unless otherwise noted.

Ref. No.	Part No.	Description
1	1038395-wshft-230	Tube Section, 36' Models (Hutchinson)
(1)	1038395-wshft-330	Tube Section, 36' Models (Mayrath)
2	1034060	Bracket, Gearbox to Head Section
3	1034053-1	Gearbox, 1:1 ratio
4	1040698	Track Section (RH & LH) f/ 36'
(4)	1046007	Track Section, (LH) f/ 52"
(4)	1046008	Track Section (RH) f/ 52'
5	1038396P	Intake Flight, 1/4" f/ 36' Models 216" long *(5.49 m)*
(5)	1038051P	Intake Flight, 1/4" f/ 52' Models 332 5/16" long *(8.44 m)*
6	1038441P	Head Flight, 1/4" f/ 36' 216" long *(5.49 m)*
(6)	1036657P	Head Flight, 1/4" f/ 52' Models 300" long *(7.62 m)*
7	1046014-130	Lower Tube Section f/ 52'
8	1046015-230	Head Tube Section f/ 52' (Hutchinson)
(8)	1046015-330	Head Tube Section f/ 52' (Mayrath)
9	1040691	Track Spacer, 3/8" thick f/ 36'
10	1259D	Stub Shaft for Intake
11	1036432	Intake Screen Tensioner Rod
12	D1152	Nut, 3/4-10 Non-Lock
13	33140	Nut, 3/4-10 Nylon Lock
14	1033444	Connecting Band, 13"

MAIN AUGER COMPONENTS
62' & 65' MODELS

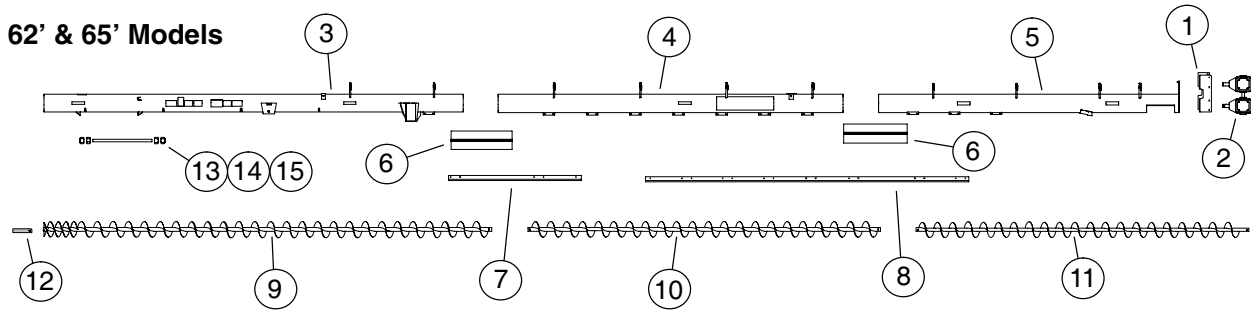

All Items listed are used with both the 62' & 65' Models unless otherwise noted.

Ref. No.	Part No.	Description
1	1034060	Bracket, Gearbox to Head Section
2	1034053-1	Gearbox, 1:1 ratio
3	1036287-130	Lower Tube Section f/ 62' & 65' 25' long *(7.62 m)*
4	1036288-230	Middle Tube Section f/ 62' & 65' (Hutchinson)
(4)	1036288-330	Middle Tube Section f/ 62' & 65' (Mayrath)
5	1043561-230	Head Tube Section, Hutch 62'
(5)	1043561-330	Head Tube Section, Mayrath 62'
(5)	1038440-230	Head Tube Scetion, Hutch 65'
(5)	1038440-330	Head Tube Section, Mayrath 65'
6	1033444	Connecting Band, 13"
7	1036297	Lower Track (RH) f/ 62' & 65' 94" long *(2.39 m)*
(7)	1036298	Lower Track (LH) f/ 62' & 65' 94" long *(2.39 m)*
8	1036292	Upper Track (RH) f/ 62' & 65' 240" long *(6.10 m)*
(8)	1036293	Upper Track (LH) f/ 62' & 65' 240" long *(6.10 m)*
9	1038051P	Lower Flight, 1/4" f/ 62' & 65' 325 13/16" long *(8.28 m)*
10	1021253P	Mid Flight, 1/4" f/ 62' & 65' 239 1/4" long *(6.08 m)*
11	1043563P	Head Flight, 1/4" f/ 62' only 128 13/16" long *(3.27 m)*
(11)	1038441P	Head Flight, 1/4" f/ 65' only 216" long *(5.49 m)*'
12	1259D	Stub Shaft for Intake
13	33140	Nut, 3/4-10 Nylon Lock
14	D1152	Nut, 3/4-10 Non-Lock
15	1036432	Intake Screen Tensioner Rod

PARTS LIST

TRUSS COMPONENTS
52', 62' & 65' MODELS

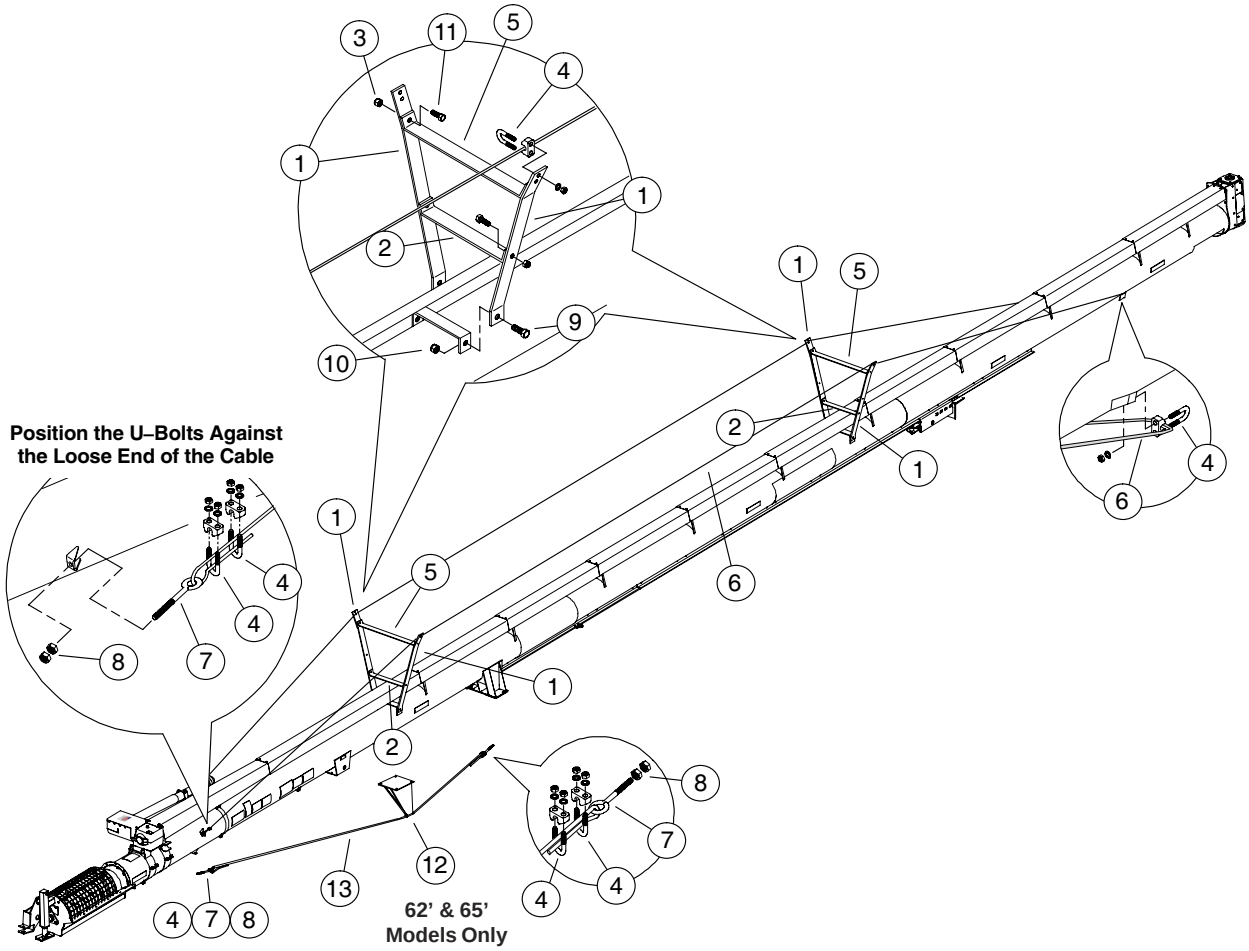

All items listed are used with the 52', 62' & 65' Models unless otherwise noted.

Ref. No.	Part No.	Description
1	1037940	Truss Side, 43 1/2" long *(1.10 m)*
2	1019157	Truss Crossbrace, lower 18 1/4" long *(46.4 cm)*
3	33136	Nut, 3/8-16 Nylon Lock PLT
4	1021158	Cable Clamp, 1/2"
5	1038363	Truss Crossbrace, top 32" long *(81.3 cm)*
6	1046005	Cable f/ 52', 1/2" x 86' *(13 mm x 26.21 m)*
(6)	1043553	Cable, f/ 62', 1/2" x 104' *(13 mm x 31.70 m)*
(6)	1038066	Cable, f/ 65', 1/2" x 107'-6" *(13 mm x 32.77 m)*
7	866015-1	Eyebolt, 5/8"
8	D1170	Nut, 5/8-11, Non-lock
9	33276	Bolt, 5/8-11 x 1 1/2" G5 PLT
10	33139	Nut, 5/8-11 Nylon Lock PLT
11	33229	Bolt, 3/8-16 x 1 1/4" G5 PLT
12	1037630	Under Truss Tower, f/ 62' & 65'
13	1037631	Cable, Under Truss Tower f/ 62' & 65', 1/2" x 17'-5" long *(13 mm x 5.31 m)*

PTO DRIVELINE, INTAKE SCREEN, JACK PTO GEARBOX & HITCH

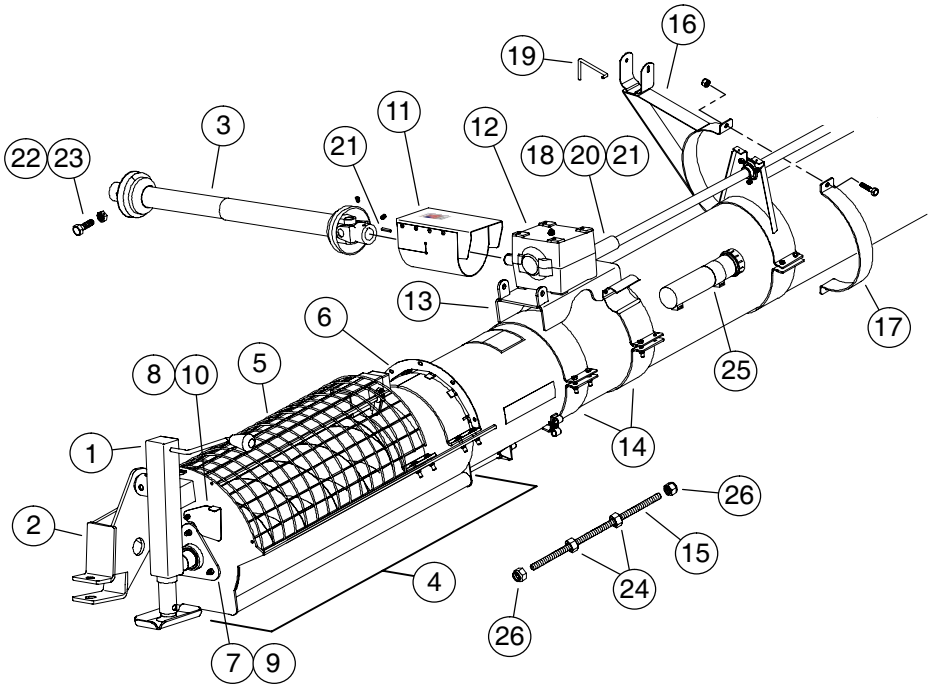

All items shown are used on the 36', 52', 62' & 65' Top Drive Models.

Ref. No.	Part No.	Description
1	1036623	Jack Assembly
2	1043217	Hitch
3	1027696	PTO Driveline
4	1043273	Intake, Complete
5	1043225	•Intake Weldment w/ Screen
6	1037887	•Half-Band Clamp f/ Intake
7	1043221	•Plate, Bearing Support
8	1043226	•Cover, Hitch Tube
9	33136	•Nut, 3/8"-16 Nylon Lock PLT
10	4003	•Nut, 1/4"-20 Nylon Lock PLT
11	1038544	PTO U-Joint Cover
12	1013973	Gearbox, PTO
13	1037157	Gearbox Mount
14	1032114P	Half-Band f/ Gearbox Mount
15	1036432	Tensioner Rod 3/4"-10 x 20" long f/ Intake Screen
16	1034823	Cradle f/ PTO Drive Line
17	1034939	Half-Band f/ PTO Cradle
18	1007599	Coupler, Drive Shaft w/ Snap Ring
19	3338A1	Pin, Cradle
20	8371C	Key, 1/4" sq. x 1 1/2" long
21	1038D	Key, 3/8" sq. x 2" long
22	1018891	Shear Bolt, 3/8-16 x 1" G8
23	1004783	3/8-16 Locknut (side depress)
24	D1152	Nut, 3/4-10 Non-Lock
25	1004287	Cannister, Operator's Manual
26	33140	Nut, 3/4-10 Nylon Lock

• Indented Parts Names Indicate these Parts are Included in the Previous Assembly.

PARTS LIST

DRIVE SHAFT & DRIVE SHAFT COVERS
36’, 52’, 62’ & 65’ PTO MODELS

36’ PTO Drive Models

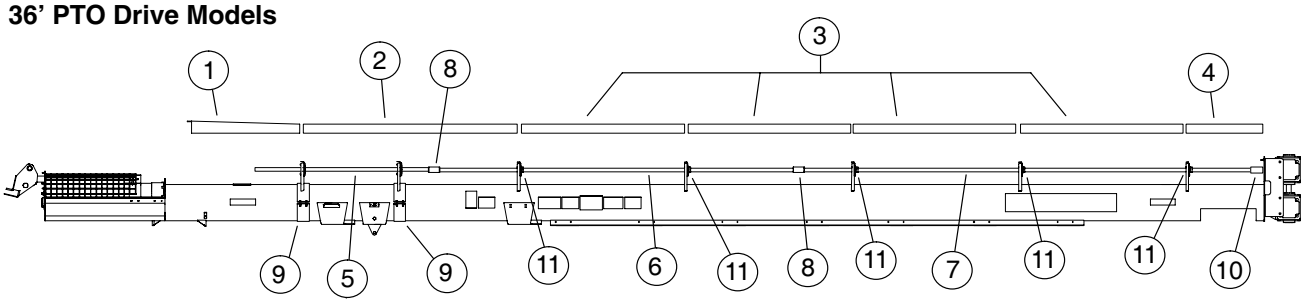

52’ PTO Drive Models

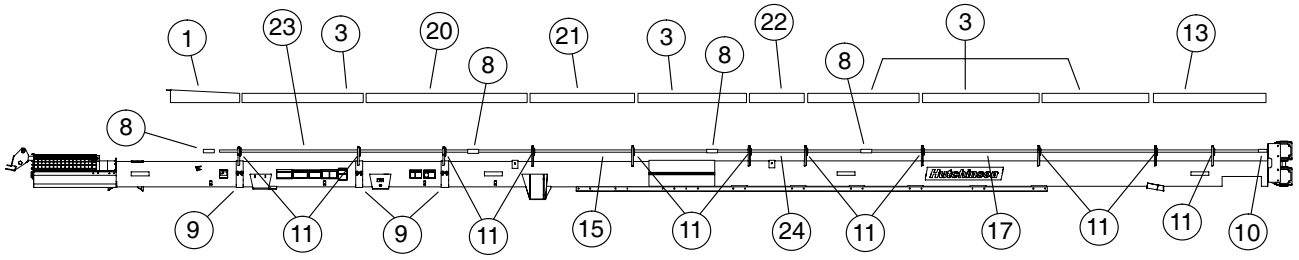

62’ & 65’ PTO Drive Models

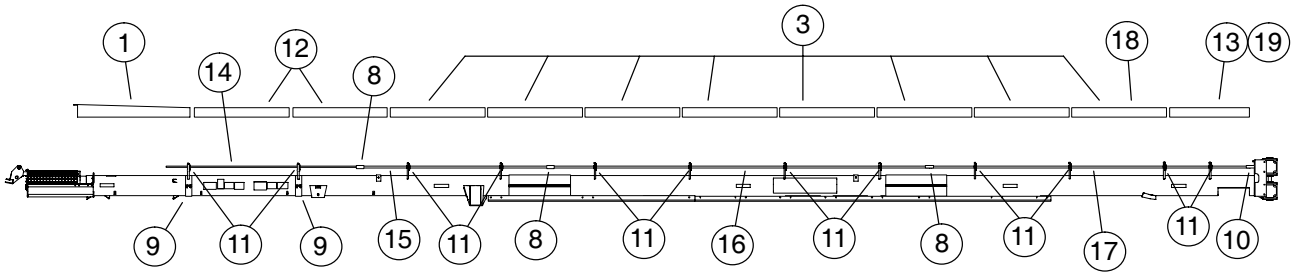

The 62’ & 65’ Models use the same covers except for the last 2 nearest the discharge end.
These two Models also use the same drive shafts except for the head drive shaft, Item 17.

DRIVE SHAFT & DRIVE SHAFT COVERS
36', 52', 62' & 65' PTO MODELS (con't.)

All Items shown are used with the 36', 52', 62' & 65' Models unless otherwise noted.

Ref. No.	Part No.	Description
1	1038505	Cover, PTO Shaft, 36 7/8" long *(937 mm)*
2	1038540	Cover, Drive Shaft f/ 36' Models 78" long *(1.98 m)*
3	1038504	Cover, Drive Shaft 61" long *(1.55 m)*
4	1038503	Cover, Drive Shaft f/ 36' Models 28 1/4" *(718 mm)*
5	1038539	Drive Shaft, f/ 36' Models 76 7/8" long *(1.95 m)*
6	1038476	Drive Shaft, f/ 36' Models 131 7/16" long *(3.34 m)*
7	1018699	Drive Shaft, f/ 36' Models 164" long *(4.17 m)*
8	1007599	Coupler, 1 1/4" x 1 1/4"
9	1038482	Band-on Bearing Mount
10	1037280	Coupler, 1 1/2" x 1 1/4"
11	3027A1	Bearing, Flangette w/ lock collar
(11)	3029A2	Flangette f/ Bearing, 1 1/4" bore
12	1034813	Cover, Drive Shaft, f/ 62' & 65' Models, 73" long *(1.85 m)*
13	1039294	Cover, Drive Shaft, f/ 52' & 65' Models, 58" long *(1.47 m)*
14	1039271	Drive Shaft, f/ 62' & 65' Models 142 1/2" long *(3.62 m)*
15	1018697	Drive Shaft f/ 52', 62' & 65' Models 123" long *(3.12 m)*
16	1007600	Drive Shaft f/ 62'& 65' Models 239 3/4" long *(6.09 m)*
17	1043558	Drive Shaft f/ 62' Models 164 3/8" long *(4.18 m)*
(17)	1018428	Drive Shaft f/ 52' & 65' Models 202 3/8" long *(5.14 m)*
18	1043556	Drive Shaft Cover f/ 62' Models 52 3/8" long *(1.33 m)*
19	1043555	Drive Shaft f/ 62' Models 28 3/4" long *(730 mm)*
20	1046000	Drive Shaft Cover f/ 52' Models 89 3/4" long *(2.28 m)*
21	1043556	Drive Shaft Cover f/ 52' Models 52 3/8" long *(1.33 m)*
22	1046006	Drive Shaft Cover f/ 52' Models 30 1/8" long *(765 mm)*
23	1046001	Drive Shaft f/ 52' Models 147 7/8" long *(3.76 m)*
24	1046010	Drive Shaft f/ 52' Models 78" long *(1.98 m)*

PARTS LIST

DRIVE SHAFT & DRIVE SHAFT COVERS
36', 52', 62' & 65' ELECTRIC MODELS

36' Electric Drive Models

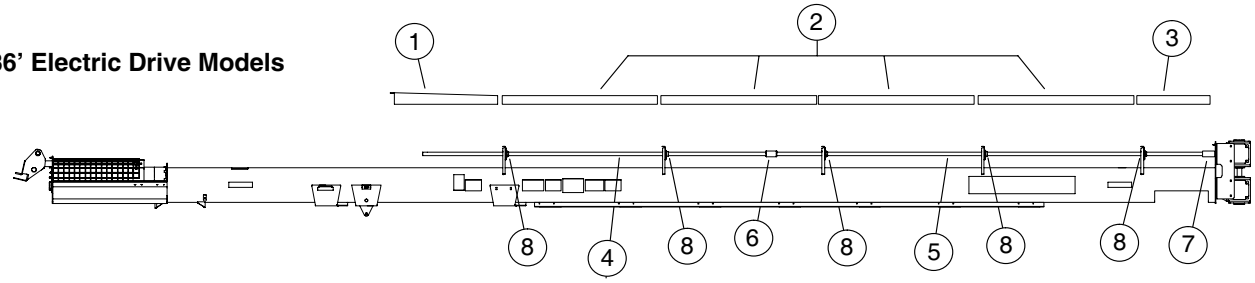

52' Electric Drive Models

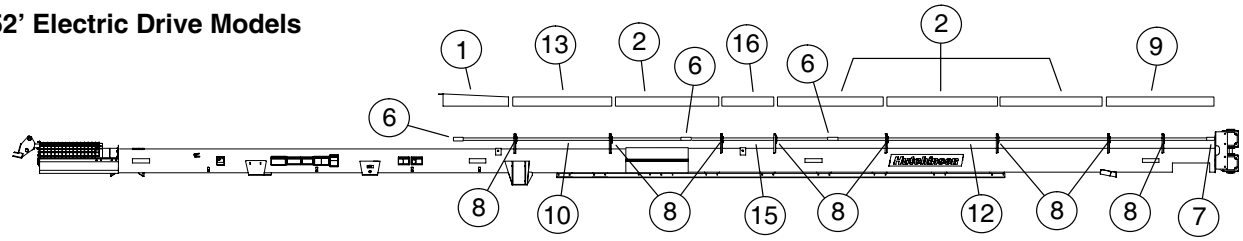

62' & 65' Electric Drive Models

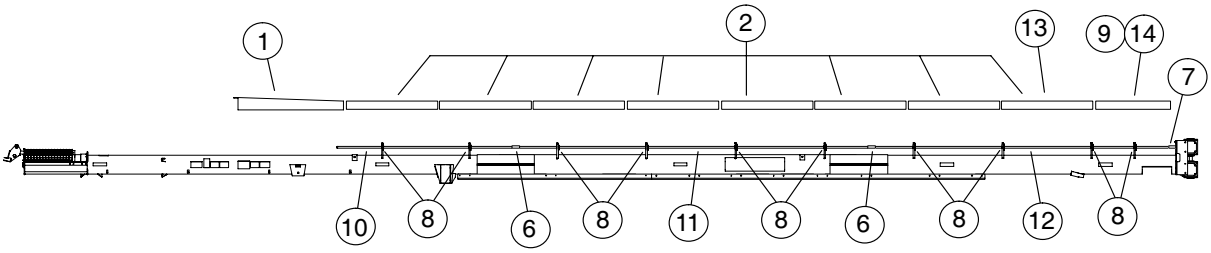

The 62' & 65' Models use the same covers except for the last 2 nearest the discharge end. These two Models also use the same drive shafts except for the head drive shaft, Item 12.

All Items shown are used with the 36', 52', 62' & 65' Models unless otherwise noted.

Ref. No.	Part No.	Description
1	1038505	Cover, Drive Shaft, 36 7/8" long *(937 mm)*
2	1038504	Cover, Drive Shaft 61" long *(1.55 m)*
3	1038503	Cover, Drive Shaft f/ 36' Models 28 1/4" *(718 mm)*
4	1038476	Drive Shaft, f/ 36' Models 131 7/16" long *(3.34 m)*
5	1018699	Drive Shaft, f/ 36' Models 164" long *(4.17 m)*
6	1007599	Coupler, 1 1/4" x 1 1/4"
7	1037280	Coupler, 1 1/2" x 1 1/4"
8	3027A1	Bearing, Flangette w/ lock collar
(8)	3029A2	Flangette f/ Bearing, 1 1/4" bore
9	1039294	Cover, Drive Shaft, f/ 52' & 65' Models, 58" long *(1.47 m)*
10	1018697	Drive Shaft f/ 52' & 65' Models 123" long *(3.12 m)*
11	1007600	Drive Shaft f/ 65' Models 239 3/4" long *(6.09 m)*
12	1043558	Drive Shaft f/ 62' Models 164 3/8" long *(4.18 m)*
(12)	1018428	Drive Shaft f/ 52' & 65' Models 202 3/8" long *(5.14 m)*
13	1043556	Drive Shaft Cover f/ 52' & 62' 52 3/8" long *(1.33 m)*
14	1043555	Drive Shaft f/ 62' Models 28 3/4" long *(730 mm)*
15	1046010	Drive Shaft f/ 52' Models 78" long *(1.98 m)*
16	1043555	Drive Shaft Cover f/ 52' Models 30 1/8" long *(765 mm)*

ELECTRIC DRIVE COMPONENTS
36', 52', 62' & 65' MODELS

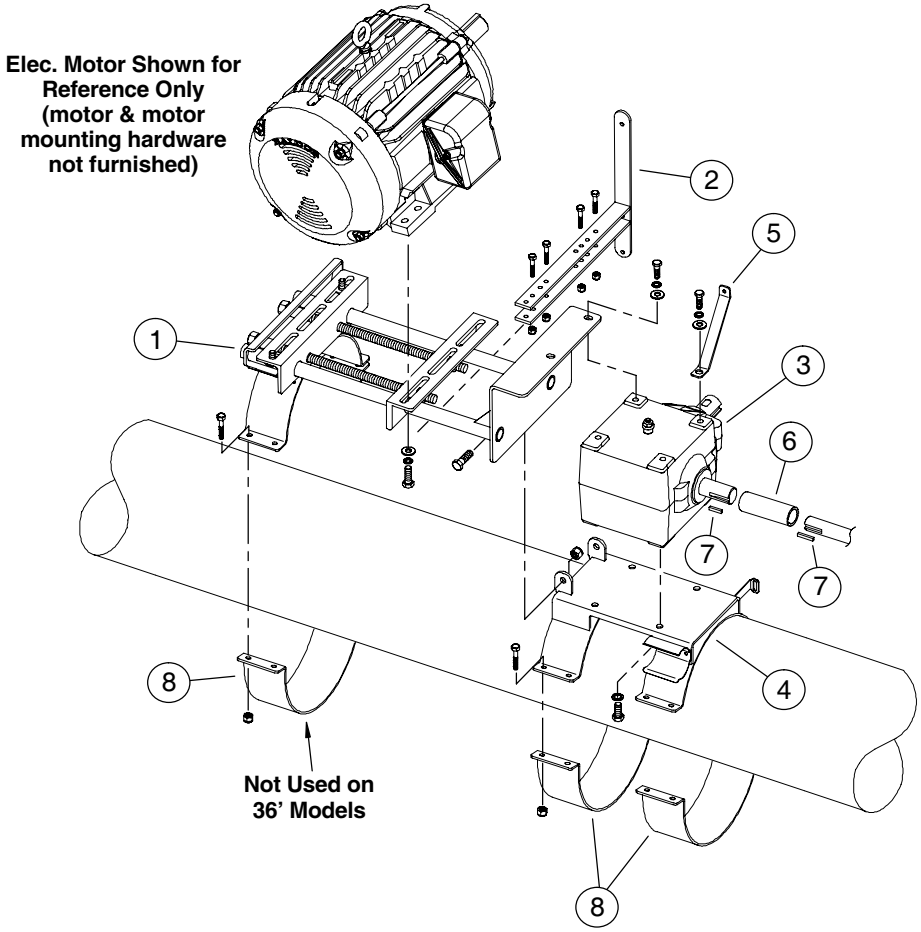

All items listed are used on the 36', 52', 62' and 65' Models except as otherwise noted in the above illustration.

Ref. No.	Part No.	Description
1	1038451	Motor Mount Assembly
2	1037240	Belt Guard Mount
3	1013973	Gearbox, 1:1 ratio (See Page P-23 for parts breakdown)
4	1037157	Gearbox Mount Plate
5	1037535	Belt Guard Brace
6	1007599	Coupler (gearbox to drive shaft)
7	8371C	Key, 1/4" sq. x 1 1/2" long
8	1032114P	Half-Band, 13" x 4" wide

ELECTRIC DRIVE COMPONENTS
36', 52', 62' & 65' MODELS

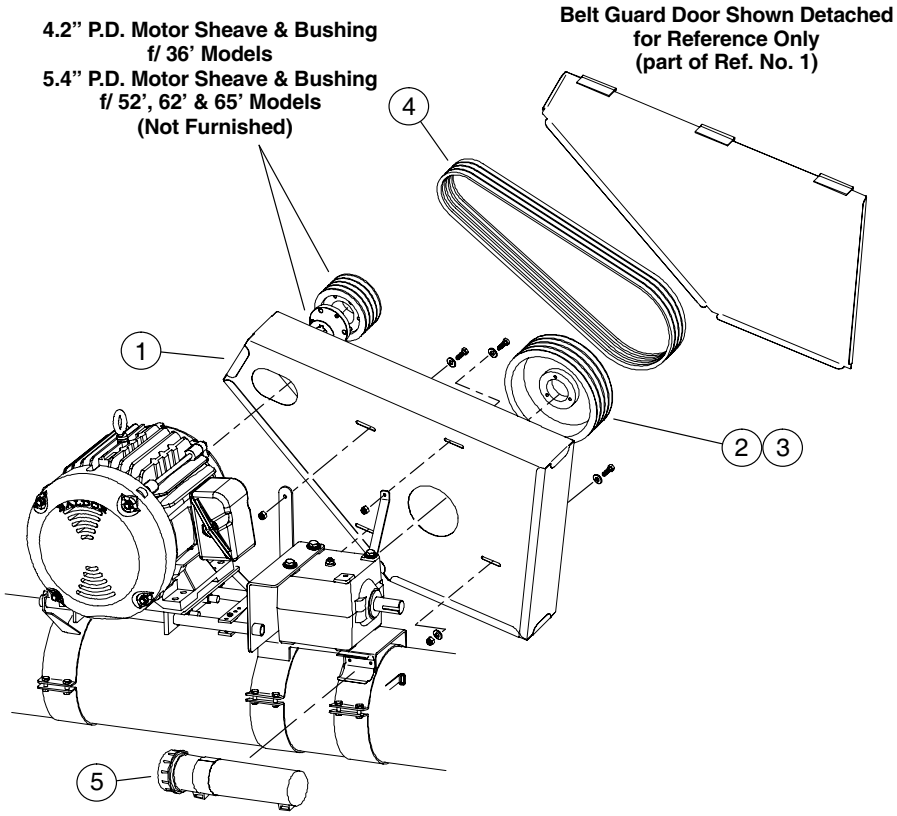

All items listed are used on the 36', 52', 62' and 65' Models unless otherwise noted.

Ref. No.	Part No.	Description
1	1039044	Belt Guard f/ 36'
(1)	1040344	Belt Guard f/ 52', 62' & 65'
2	1025830	Sheave, 13.6" 4-belt f/ 36'
(2)	1018750	Sheave, 18.4" 5-belt f/ 52', 62' & 65'
3	3295A1	Bushing, QD SF f/ 36'
(3)	3073A1	Bushing, QD SF f/ 52', 62' & 65'
4	1009128	Belt, B-70 f/ 36' Models
(4)	40129	Belt, B-83 f/ 52', 62' & 65' Models

Ref. No.	Part No.	Description
5	1036990	Operator's Manual Container
- -	1018308	Latch, Rubber (f/ Belt Guard)*
- -	1018271	Screw, #6 x 3/8" f/ Belt Guard Latch*
- -	1018272	Washer, #6 Lock f/ Belt Guard Latch*
- -	1018273	Nut, #6 Non-Lock f/ Belt Guard Latch*

* Not Shown

WINCH LIFT COMPONENTS
36' MODELS

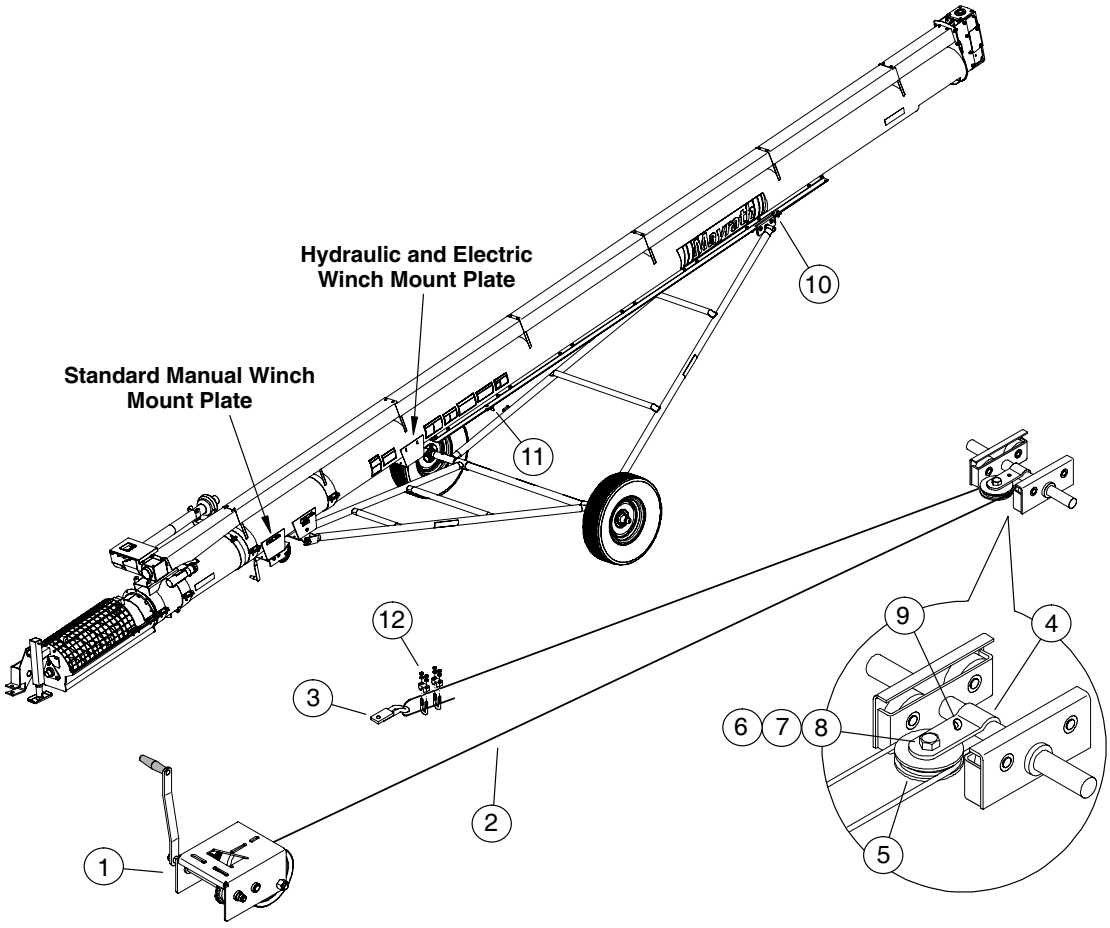

Ref. No.	Part No.	Description
1	40302	Winch, K2550 w/ handle
2	1002055	Cable, 1/4" dia. x 36' long *(6 mm x 10.97 m)*
3	1039696	Anchor, Cable
4	5120A1	Clevis, Pulley
5	3223A1	Pulley f/ 1/4" dia. Cable
6	1002228	Bolt, 1/2-13 x 2" G5 PLT
7	33138	Nut, Nylon Lock, 1/2-13
8	50079A1	Bushing
9	D1263	Cotter Pin, 1/4" x 2"
10	1038945	Trolley Stop, Upper
11	1039645	Trolley Stop, Lower
12	6369C	Cable Clamp, 1/4"

WINCH LIFT COMPONENTS
52', 62' & 65' MODELS

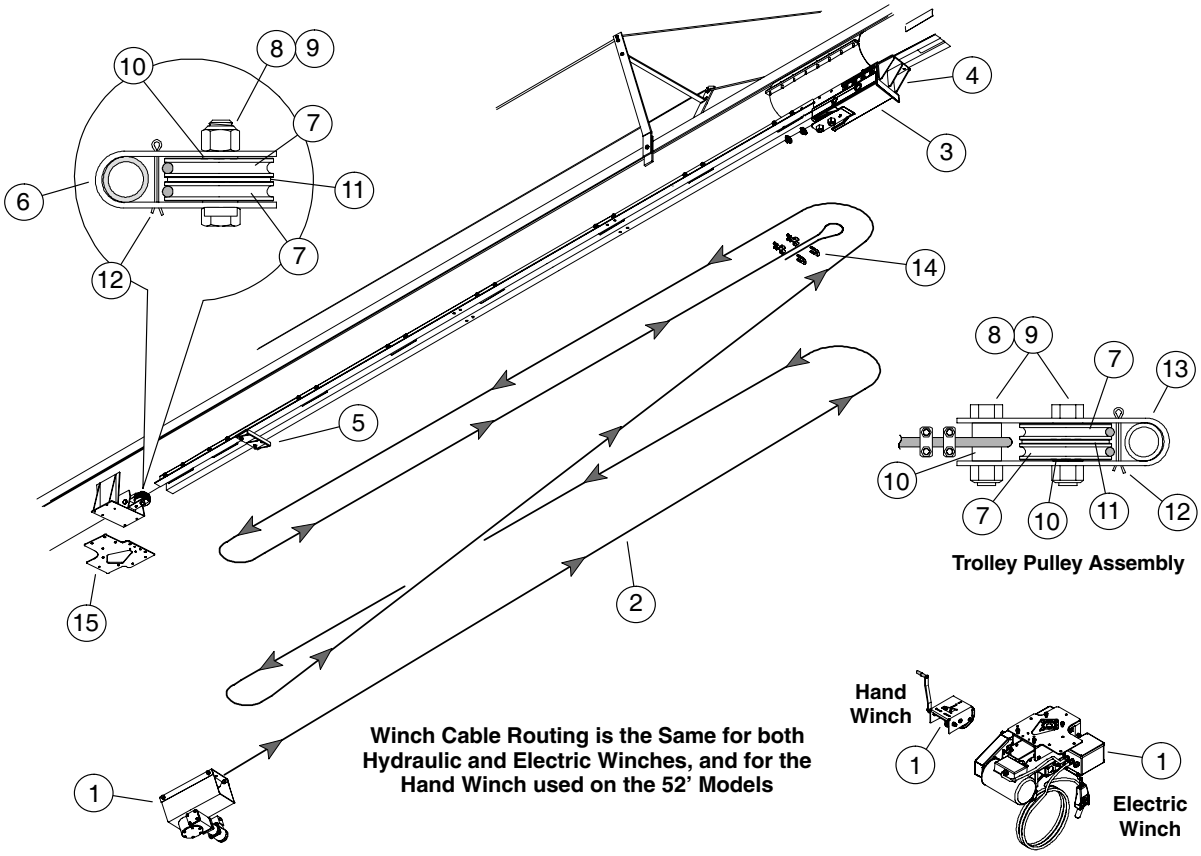

All Items shown are used on the 52', 62' & 65' Models unless otherwise noted.

Ref. No.	Part No.	Description
1	1006525	Winch, Hydraulic
(1)	1006526	Winch, Electric
(1)	40302	Winch, Hand (f/ 52' Models)
2	4138A1	Cable, 5/16" dia. x 115' f/ 52' *(13 mm x 35.05 m)*
(2)	1038067	Cable, 5/16" dia. x 128' f/ 62' & 65' *(13 mm x 39.01 m)*
3	1040076	Trolley, Complete
4	1019827	Trolley Stop, Upper
5	1031146	Trolley Stop, Lower
6	1032389	Clevis, Pulley (lower)
7	1032519	Pulley

Ref. No.	Part No.	Description
8	1021064	Bolt, 1-8 x 3 1/2" G5 PLT
9	1007943	Nut, 1-8 Nylon Lock PLT
10	1021146	Bushing, Cable Anchor
11	1031583	Spacer Washer, 3/8" thick
12	D1165	Cotter Pin, 1/4" x 3"
13	1021154	Clevis, Pulley (trolley)
14	3153A91	Cable Clamp, 5/16"
15	1038158	Adapter, Winch Mount

Refer to Page P-21 for Electric Winch Breakdown
Refer to Page P-22 for Hydraulic Winch Breakdown
Refer to Page P-27 for Trolley Parts Breakdown

UNDERCARRIAGE COMPONENTS
36' MODELS

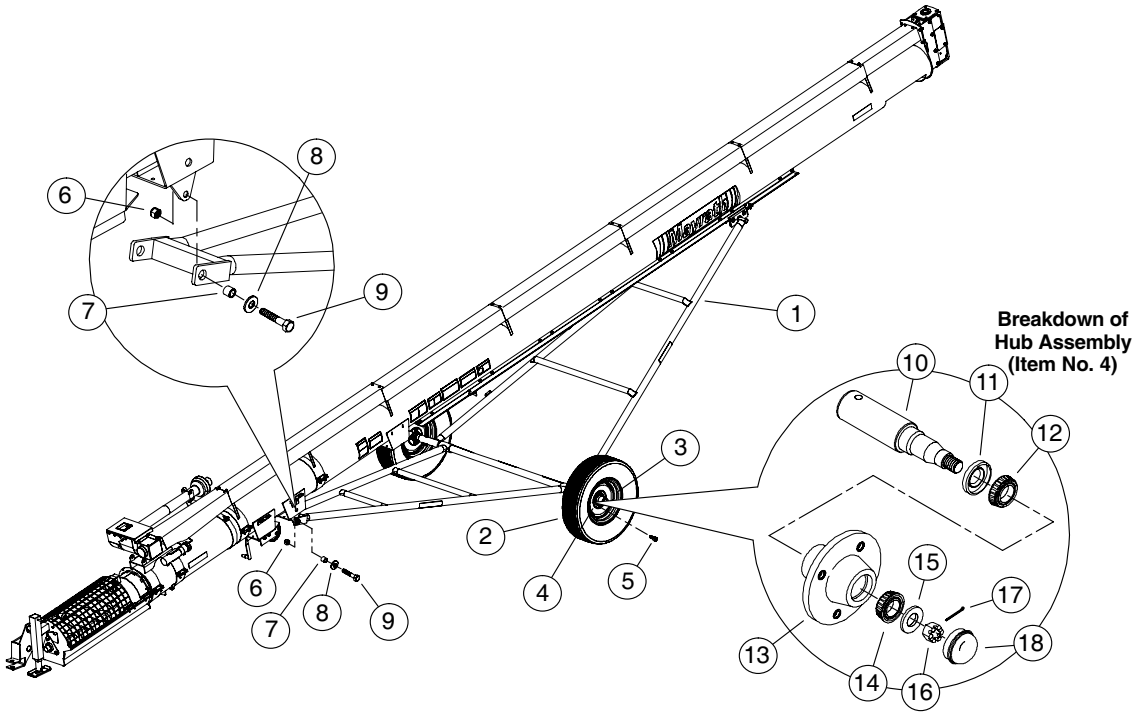

The Tire and Wheel (Items 2 and 3) can be obtained as a complete assembly: Order Part No. 1029082

Ref. No.	Part No.	Description
1	1033046	Undercarriage f/ 36' Models
2	1012040	Tire, 15" (225) 8-ply
3	6393D	Wheel Rim, 4-bolt, 4.5" wide
4	1001563	Hub Assembly, complete
5	106241	Lug Bolt
6	33140	Nut, 3/4-10 Nylon Lock PLT
7	1021065	Bushing, 11/16" long
8	33027	Washer, 3/4" Flat
9	33111	Bolt, 3/4-10 x 2 1/2" G5 PLT

Ref. No.	Part No.	Description
10	1001002	Spindle f/ 36' Models
11	106245	Grease Seal
12	3079R1	Inner Bearing (Timken LM67048)
13	90174	Hub, includes bearing cups
14	40551	Outer Bearing (Timken LM11949)
15	106252	Washer, 1 5/16" O.D. x 21/32" I.D.
16	106250	Nut, Castle 5/8-18
17	D1146	Cotter Pin, 5/32" x 1 1/4"
18	106244	Dust Cover

UNDERCARRIAGE COMPONENTS
52', 62' & 65' MODELS

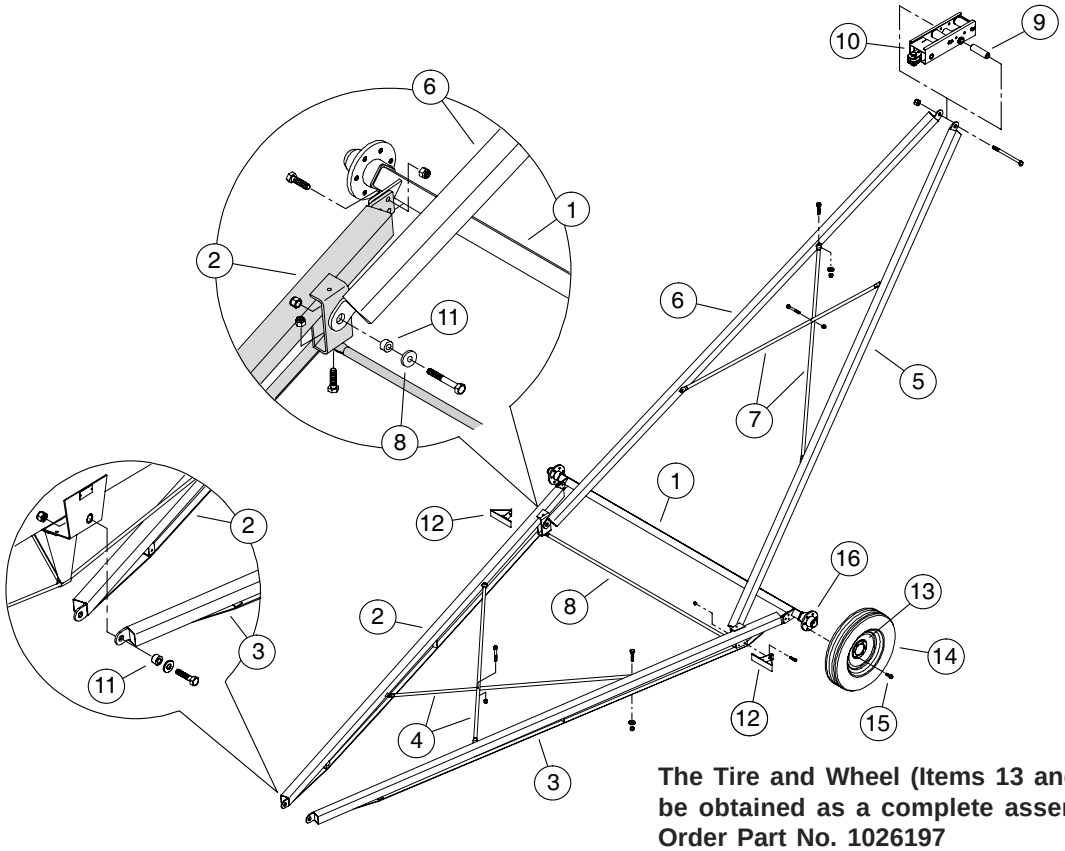

The Tire and Wheel (Items 13 and 14) can be obtained as a complete assembly: Order Part No. 1026197

All Items shown are used on the 52', 62' & 65' Models unless otherwise noted.

Ref. No.	Part No.	Description
1	1021382	Axle f/ 52' Models
(1)	1021383	Axle, 62' & 65' Models
2	1032402	Lower Radius Arm (left) f/ 52' 187 13/16" lg *(4.77 m)*
(2)	1018362	Lower Radius Arm (left) f/ 62' & 65', 230.25" lg *(5.85 m)*
3	1032403	Lower Radius Arm (right) f/ 52' 187 13/16" lg *(4.77 m)*
(3)	1018361	Lower Radius Arm (right) f/ 62' & 65', 230.25" lg *(5.85 m)*
4	1032411	Cross Support Brace f/ 52' 83 5/8" lg *(2.12 m)*
(4)	1020015	Cross Support Brace f/ 62' & 65', 103.75" lg *(2.64 m)*
5	1032404	Lift Arm, 190 7/16" lg *(4.84 m)* f/ 52' Models
(5)	1018360	Lift Arm, 236" lg *(5.99 m)* f/ 62' & 65' Models
6	1032404	Lift Arm, 190 7/16" lg *(4.84 m)* f/ 52' Models
(6)	1018360	Lift Arm, 236" lg *(5.99 m)* f/ 62' & 65' Models
7	1032412	Lift Arm Crossbrace f/ 52' 75" lg (1.91 m)
(7)	1019134	Lift Arm Crossbrace f/ 62' & 65' 95 3/4" lg (2.43 m)
8	1032409	Lower Radius Arm Brace f/ 52', 90 1/4" lg *(2.29 m)*
(8)	1019132	Lower Radius Arm Brace f/ 62' & 65', 113.25" lg *(2.88 m)*
9	1020041	Bushing, Trolley
10	1040076	Trolley Assembly, complete
11	1021065	Bushing, Lift Arm Pivot
12	1021204	Reflector Bracket
13	1025912	Wheel Rim, 16" x 6" wide
14	1025913	Tire, 16" (235/85R16)
15	106241	Lug Bolt
16	1025911	Hub Assembly, 6-bolt

ELECTRIC WINCH COMPONENTS
36', 52', 62' & 65' MODELS

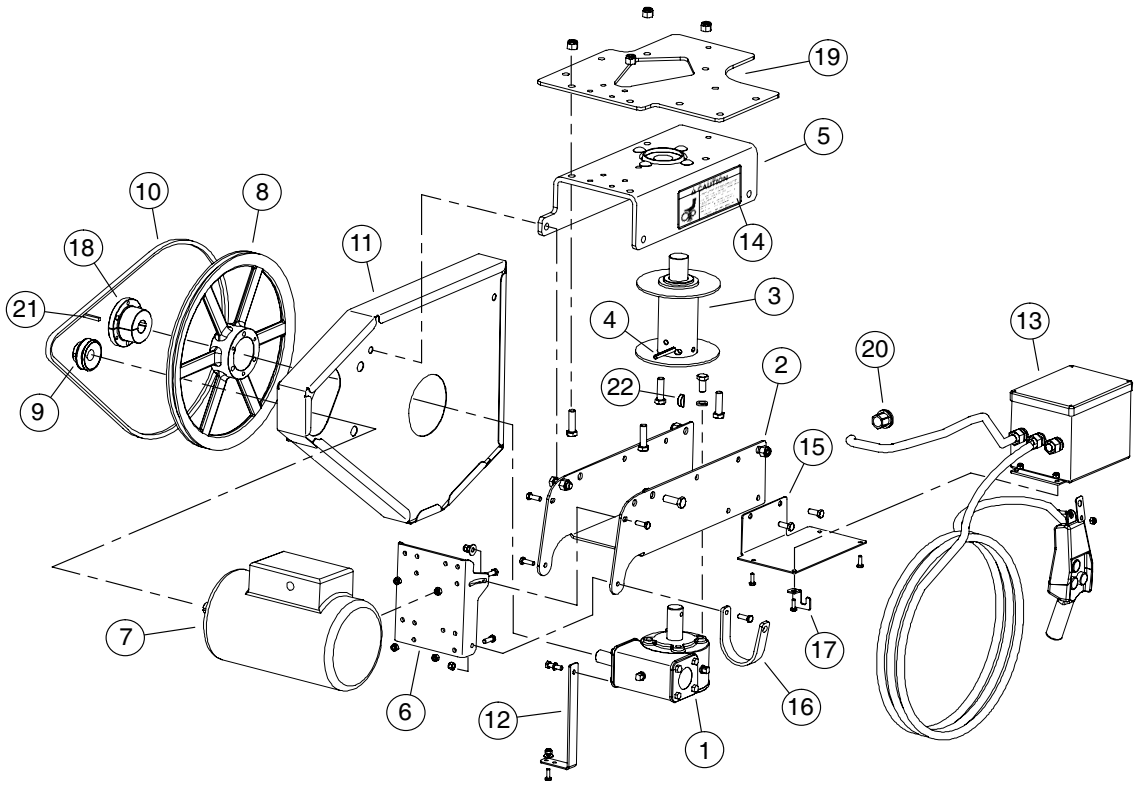

Complete Winch Assembly:
Part No. 1006526

Ref. No.	Part No.	Description	Ref. No.	Part No.	Description
1	1034615	Gearbox, Superior (20:1 ratio)	12	1044591	Bracket, Belt Guard Mount
2	1044644	Frame Weldment w/ Decal	13	1042691	Control Box w/ Pendant
3	1044614	Drum Weldment	14	1006554	Decal, Caution, f/ Electric Winch
4	33190	Roll Pin, 5/16" x 2 1/2" long	15	1044384	Mount Plate f/ Control Box
5	1044612	Top Plate f/ Frame	16	1035351	Strap, Holder f/ Electrical Cord
6	1044590	Motor Mount f/ Gearbox	17	1044372	Hanger f/ Pendant Control
7	1011044	Electric Motor, 2HP (145T frame)	18	3294A1	Bushing, QD SK, 1.00 B#SKX1
8	40681	Sheave, 1B 15.4"	19	1038158	Adapter, Spacer Plate
9	40165	Sheave, 1A x 2.5, 7/8" Bore	20	1038412	Adapter, 1/2" Conduit
10	40106	Belt, B-59	21	8371C	Key, 1/4" sq. x 1 1/2" long
11	1044627	Belt Guard f/ Electric Winch	22	1007288	Woodruff Key #1008

HYDRAULIC WINCH COMPONENTS
36', 52', 62' & 65' MODELS

Complete Winch Assembly,
Part No. 1006525

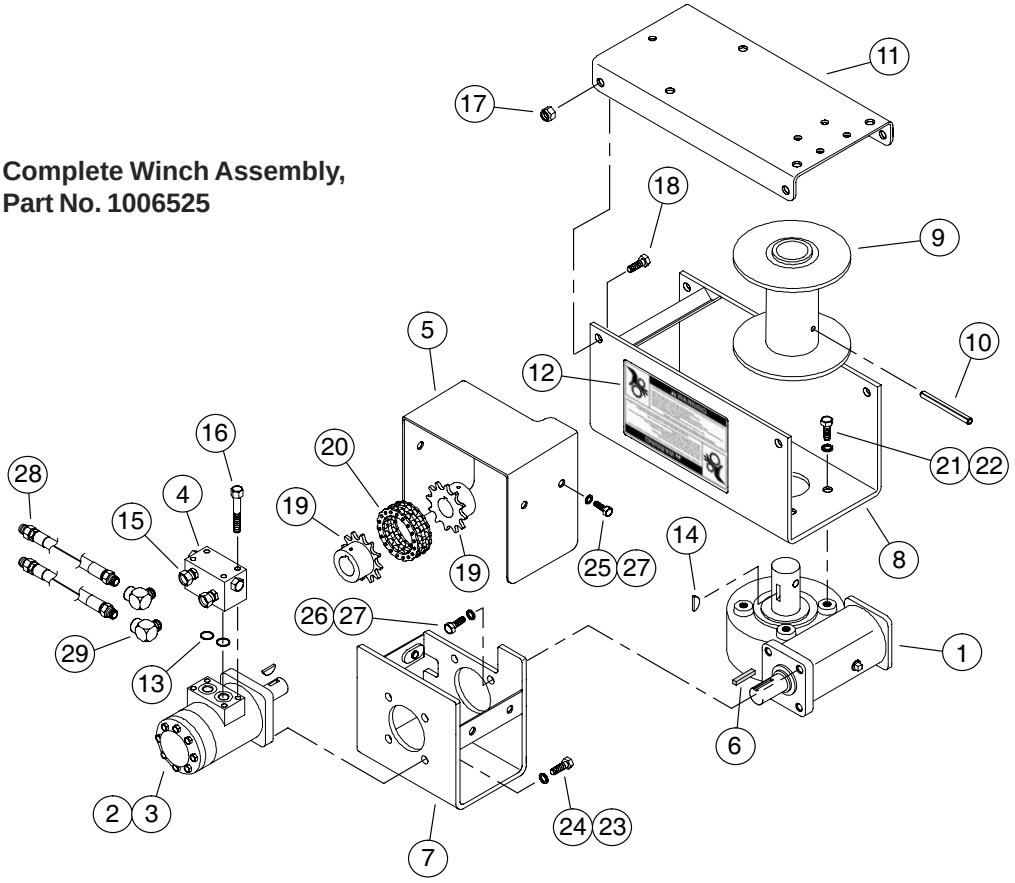

Ref. No.	Part No.	Description
1	1034615	Superior Gearbox, 20:1
2	41133	Hydraulic Motor, "H" Series
3	- - -	Woodruff Key included w/ hydr. motor
4	1022004	Valve, Pressure Relief
5	1043177	Shield f/ Hydraulic Winch
6	8371C	Key, 1/4" sq. x 1 1/2" long
7	1043180	Hydraulic Motor Mount
8	1007014	Frame Weldment w/ Decal
9	1006520	Drum Weldment
10	33190	Roll Pin, 5/16" x 2 1/2" long
11	1006523	Frame Top Plate
12	1006559	Warning Decal
13	41129	O-Ring f/ Pressure Relief Valve
14	1007288	Woodruff Key #1008
15	1022123	Hydraulic Adapter w/ Restrictor
16	1002217	Bolt, 5/16-18 x 2 1/2" G5 PLT
17	33138	Nut, 1/2-13 Nylon Lock PLT
18	33082	Bolt, 1/2-13 x 1 1/4" G5 PLT
19	3198A1	Flex Coupler, RC 1.000 Half
20	3146A91	Chain, RC-60
21	33294	Bolt, 1/2-13 x 1" G5 PLT
22	D1143	Lock Washer, 1/2" PLT
23	33309	Bolt, 3/8-16 x 3/4" G5 PLT
24	D1150	Lock Washer, 3/8"
25	4701-1	Bolt, 5/16" 18 x 3/4" G5 PLT
26	33046	Bolt, 5/16-18 x 1" G5 PLT
27	33144	Lock Washer, 5/16" PLT
28	1041450	Hose, Hydraulic, 3/8" x 28'
29	106413	Elbow, 90° (.5m/.5fm)

HEAD GEARBOX COMPONENTS
36', 52', 62' & 65' MODELS

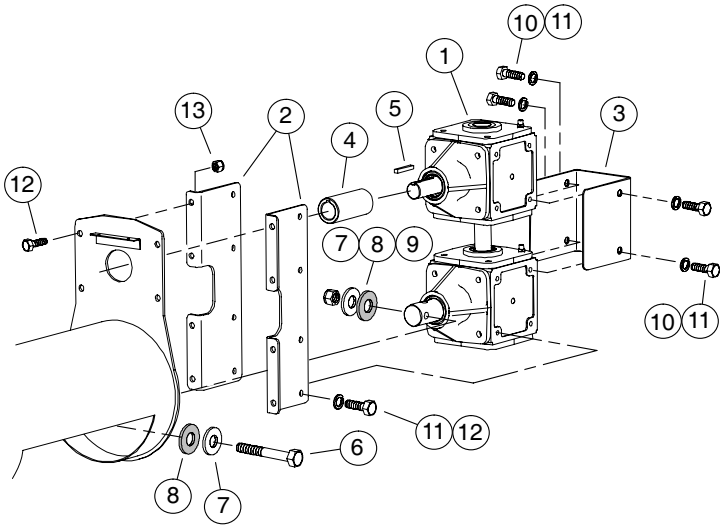

Ref. No.	Part No.	Description
1	1034053-1	Gearbox, 1:1 Ratio
2	1034060	Bracket, Gearbox to Head
3	1037546	Shaft Cover
4	1037280	Coupler, 1 1/4" x 1 1/2"
5	1038D	Key, 3/8" sq. x 2" long
6	1010485	Bolt, 5/8-11 x 4" G8 BLK
7	33026	Flat Washer, 5/8" PLT
8	1022476	Rubber Washer, 5/8"
9	1005111	Locknut, 5/8-11 side depress
10	1002226	Bolt, 1/2-13 x 3/4" G5 PLT
11	D1143	Lock Washer, 1/2" PLT
12	33082	Bolt, 1/2-13 x 1 1/2" G5 PLT
13	33138	Nut, 1/2-13 Nylon Lock PLT

GEARBOX COMPONENTS

Complete Gearbox, 1013973

Ref. No.	Part No.	Description
1	1006227	Housing Casting
2	1006226	Housing Casting
3	1014355	Pinion Shaft/Gear Assembly
4	1014359	Cross Shaft/Gear Assembly
5	1014364	Bearing Cone
6	1014365	Bearing Cone
7	1006224	Bearing Cup
8	1014366	Bearing Cone
9	1014367	Seal, 1 1/2"
10	1014368	Seal, 1 3/8"
11	1014369	Retaining Ring, 1 1/2"
- -	1006232	Bolt, 3/8" NC x 21/4" (not shown)
- -	1006230	Pipe Plug, 1/2" (not shown)
- -	1006231	Vent Plug, 1/2" (not shown)

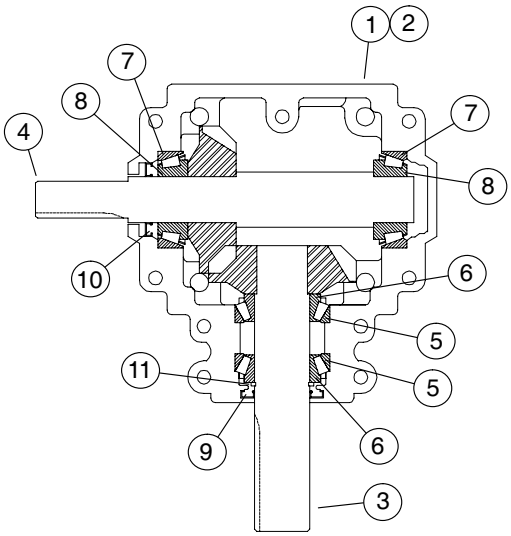

PTO DRIVELINE COMPONENTS
36', 52', 62' & 65' MODELS

Complete PTO Drive Line,
Order Hutchinson/Mayrath Part No. 1027696

NOTE: Repair parts can be obtained through an authorized Weasler Dealer. For dealer information contact:

Weasler Engineering, Inc.
West Bend, WI 53095 USA
Tel: +1-262.338.32161
Email Address:
oemsales@weasler.com

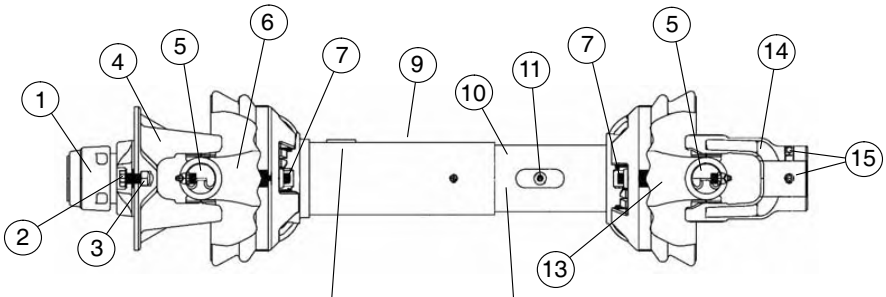

Conveyor End:
U-Joint Type 35R w/ 1.50" Bore

Tractor End:
1 3/8-6 Spline

Maximum Operating Speed:
540 RPM

Ref. No.	Weasler Part No.	Description
1	26-15120	SSL/Auto-Lok Repair Kit
2	11-13156	Shear Bolt, 3/8-16 x 1" G8
3	11-10035	Nut, 3/8-16 Lock
4	40-30011	Ball Shear Assembly
5	03-10045	35R Cross & Bearing Kit
6	99-22829	Yoke & Shaft
7	19-15126	Guard Repair Kit
8	13-10021	Safety Decal
9	97-22829	Outer Guard
10	96-22829	Inner Guard
11	11-10454	Roll Pin, 1/4" x 1" long
12	13-10022	Safety Decal
13	98-22829	Yoke, Tube & Slip Sleeve
14	35041-1572	Yoke
15	11-10215	Setscrew, 3/8-16 x .38" long

COLLAPSIBLE HOPPER COMPONENTS
36', 52', 62' & 65' MODELS

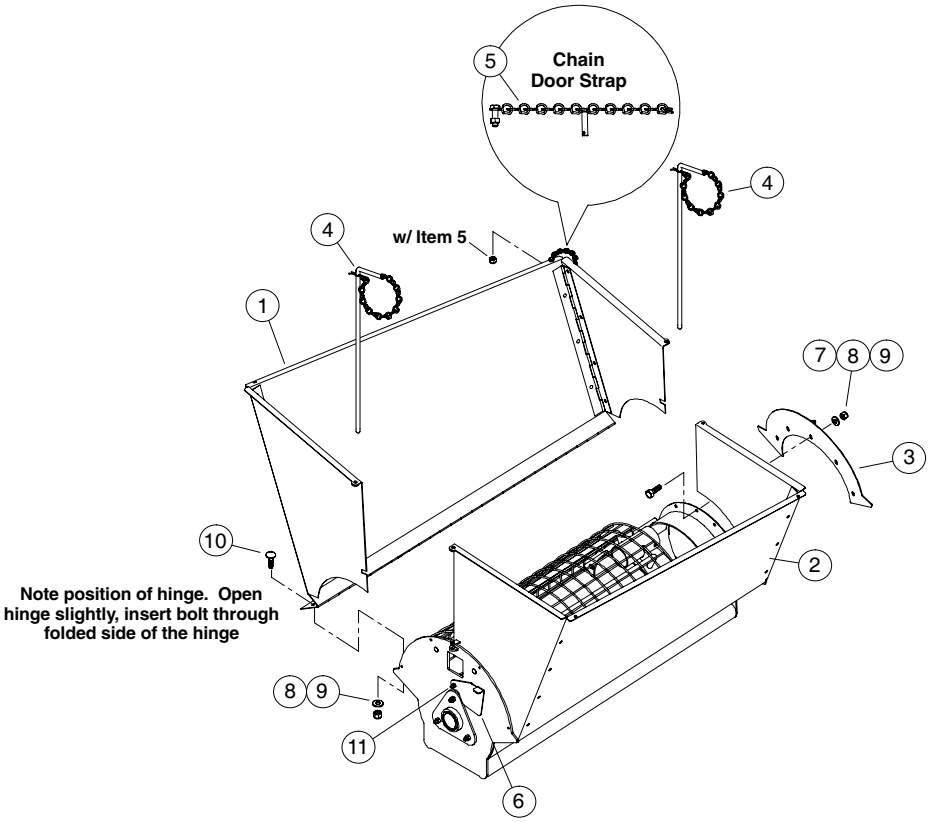

Complete Hopper Assembly,
Part No. 1038044

Ref. No.	Part No.	Description
1	1038021	Left Side, Collapsible Hopper
2	1038022	Right Side, Collapsible Hopper
3	1038019	Rear Filler Plate
4	1038193	Pin, Collapsible Hopper
5	1038173	Chain Strap w/ Nylon Locknut
6	1043226	Hitch Cover Plate
7	4705-1	Bolt, 5/16-18 x 3/4" G5 PLT
8	33023	Flat Washer, 5/16" PLT
9	33135	Nut, 5/16-18 Nylon Lock PLT
10	33019	Bolt, Elevator, 5/16-18 x 1 1/4" G5 PLT
11	4003	Nut, 1/4-20 Nylon Lock PLT

FLEX HOPPER COMPONENTS
36', 52', 62' & 65' MODELS

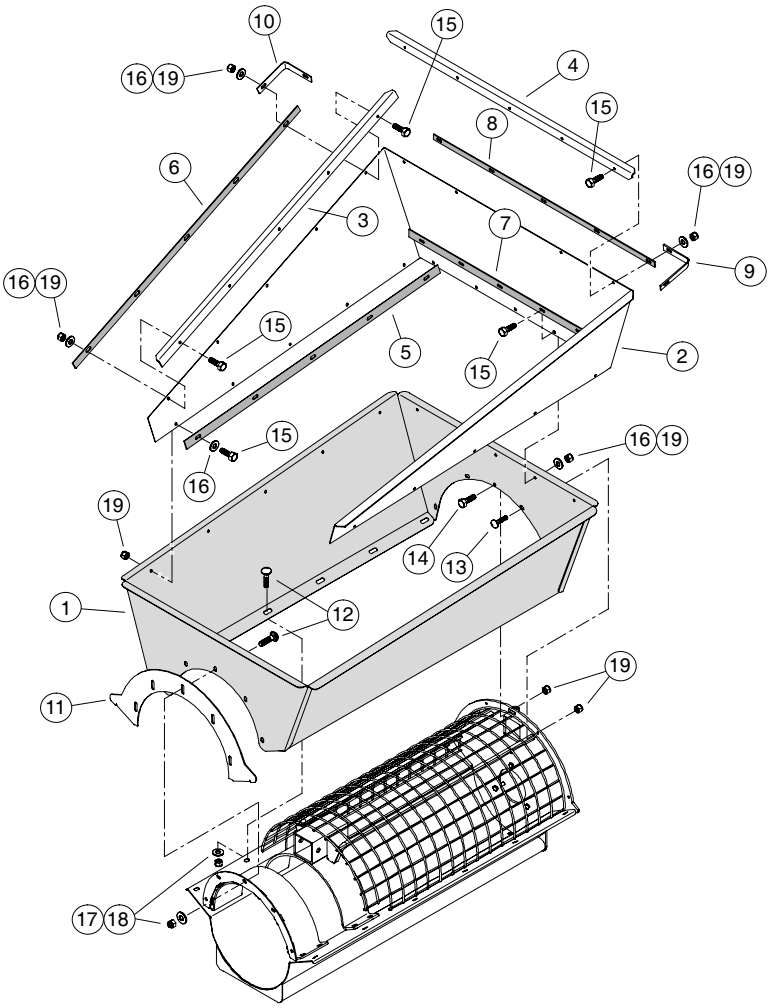

Complete Hopper Assembly,
Part No. 1038500

Ref. No.	Part No.	Description	Ref. No.	Part No.	Description
1	1039308	Flex Hopper Weldment	11	1039653	Panel, Back Fill
2	1039309	Rubber Boot	12	1002238	Bolt, Carriage 5/16-18 x 3/4" G5 PLT
3	1039324	Support Angle (sides)	13	1002244	Bolt, Carriage 1/4-20 x 3/4" G5 PLT
4	1039325	Support Angle (rear)	14	4605-1	Bolt, 1/4-20 x 3/4" G5 PLT
5	1039326	Clamp Strip (bottom sides)	15	4618-1	Bolt, 1/4-20 x 1" G5 PLT
6	1039327	Clamp Strip (top sides)	16	33022	Washer, 1/4" Flat PLT
7	1039328	Clamp Strip (bottom rear)	17	33023	Washer, 5/16" Flat PLT
8	1039329	Clamp Strip (top rear)	18	33135	Nut, 5/16-18 Nylon Lock PLT
9	1039334	Corner Clamp (left	19	4003	Nut, 1/4-20 Nylon Lock PLT
10	1039335	Corner Clamp (right)			

HYDRAULIC COMPONENTS
36', 52', 62' & 65' MODELS

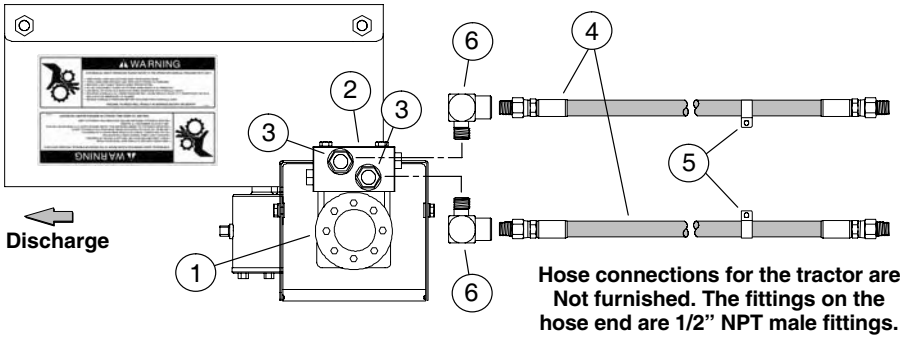

Ref. No.	Part No.	Description
1	41133	Hydraulic Motor
2	1022004	Pressure Relief Valve
3	1022123	Hydraulic Adapter
4	1041450	Hydraulic Hose, 3/8" x 28'
5	1006324	Clamp, Hydraulic Hose Mount
6	106413	Elbow, 90° Hydraulic (1/2" male to 1/2" female NPT)

TROLLEY COMPONENTS
f/ 52', 62' & 65' MODELS

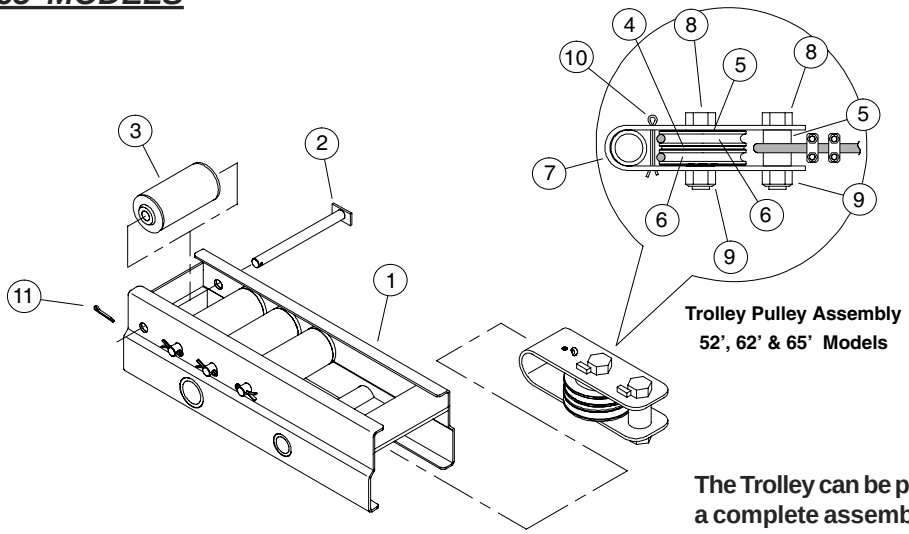

The Trolley can be purchased as a complete assembly: Order Part No. 1040076

Ref. No.	Part No.	Description
1	1021077	Trolley Weldment
2	1021057	Pin, Trolley
3	1021060	Roller Assembly f/ Trolley
4	1031583	Spacer, 3/8" thick
5	1021146	Bushing, Pulley Anchor
6	1032519	Pulley f/ 5/16" dia. Cable
7	1021154	Clevis f/ Trolley Pulley
8	1021064	Bolt, 1-8 x 3 1/2" G5 PLT
9	1007943	Nut, 1-8 Nylon Lock PLT
10	D1165	Cotter Pin, 1/4" x 3"
11	3337A1	Cotter Pin, 3/16" x 1 1/2"

OPTIONAL INTERNAL BEARING & FLIGHT COMPONENTS 36' & 52' MODELS

36' Model w/ Internal Bearings

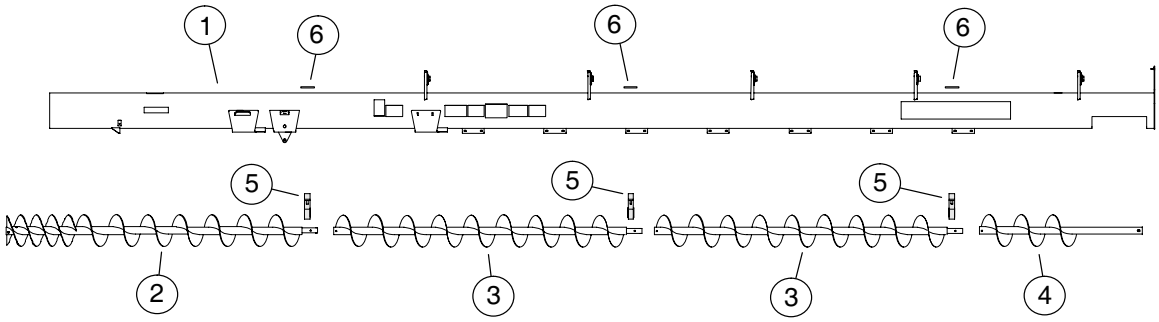

52' Models w/ Internal Bearings

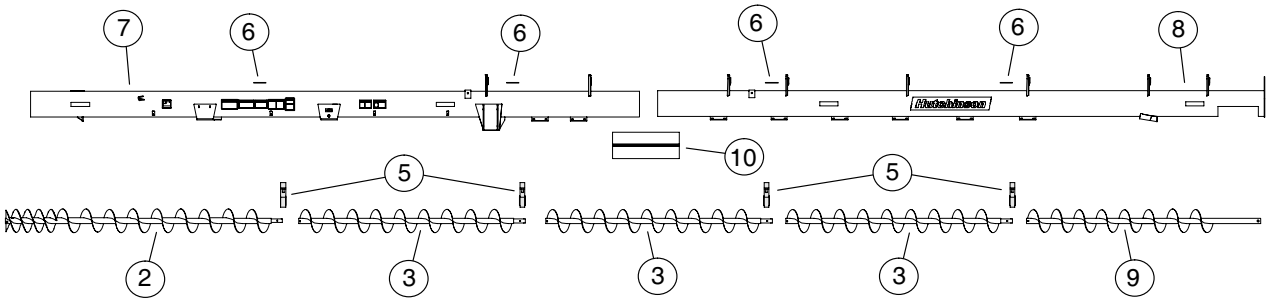

The components shown here are for the 36' & 52' Models with the internal bearing option.

The items listed below (with the exception of the connecting bands) are the only difference from the main auger components listed on Pages P-8 & P-9. All main auger components (tracks, track spacers, tensioner rod, intake stub shaft, gearbox & gearbox bracket) can be ordered using the part numbers on Pages P-8 & P-9.

The drive shafts and drive shaft covers are the same for standard models and models using the optional internal bearings. To obtain the shafts or covers, use the part numbers shown on Pages P-12, P-13 & P-14.

All Items listed below are used with both the 36' & 52' Models unless otherwise noted.

Ref. No.	Part No.	Description
1	1039848-230	Tube Section, 36' Models f/ Internal Bearings (Hutchinson)
(1)	1039848-330	Tube Section, 36' Models f/ Internal Bearings (Mayrath)
2	1039859P	Lower Flight, 1/4" f/ 36' & 52' 144" long *(3.66 m)*
3	1035240P	Mid Flight, 1/4" f/ 36' & 52' 117 1/4" long *(2.98 m)*
4	1039855P	Upper Flight, 1/4" f/ 36' 49 5/16" long *(1.25 m)*
5	1035183	Internal Bearing Hanger
6	1012367	Mount Plate f/ Internal Bearing
7	1046016-130	Lower Tube Section, 52' Models f/ Internal Bearings
8	1046017-230	Upper Tube Section, 52' Models f/ Internal Bearing (Hutchinson)
(8)	1046017-330	Mid Tube Section, 52' Models f/ Internal Bearing (Mayrath)
9	1046009	Upper Flight Section, 52' Models
10	1033444	Connecting Band, 13"

OPTIONAL INTERNAL BEARING & FLIGHT COMPONENTS 62' & 65' MODELS

62' Model w/ Internal Bearings

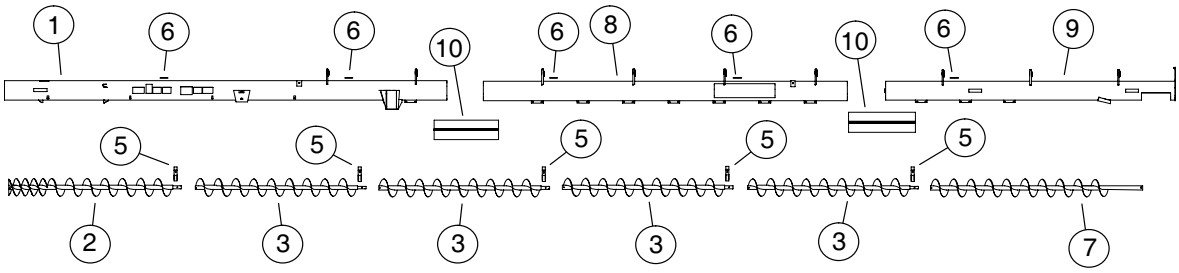

65' Model w/ Internal Bearings

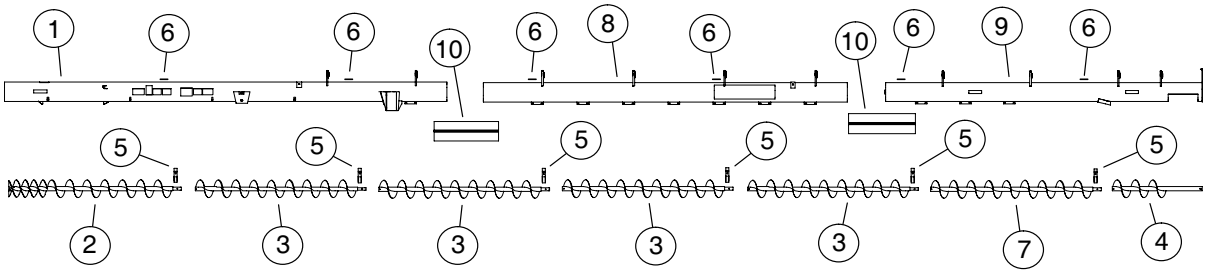

The components shown here are for the 62' & 65' Models with the internal bearing option.

The items listed below (with the exception of the connecting bands) are the only difference from the main auger components listed on Pages P-8 & P-9. All main auger components (tracks, track spacers, tensioner rod, intake stub shaft, gearbox & gearbox bracket) can be ordered using the part numbers on Pages P-8 & P-9.

The drive shafts and drive shaft covers are the same for standard models and models using the optional internal bearings. To obtain the shafts or covers, use the part numbers shown on Pages P-12, P-13 & P-14.

All Items listed below are used with both the 62' & 65' Models unless otherwise noted.

Ref. No.	Part No.	Description
1	1039919-130	Lower Tube Section, 62' & 65' f/ Internal Bearings
2	1039859P	Lower Flight, 1/4" f/ 62' & 65' 144" long *(3.66 m)*
3	1035240P	Mid Flight, 1/4" f/ 62' & 65' 117 1/4" long *(2.98 m)*
4	1039855P	Upper Flight, 1/4" f/ 65' Only 49 5/16" long *(1.25 m)*
5	1035183	Internal Bearing Hanger
6	1012367	Mount Plate f/ Internal Bearing
7	1043563P	Upper Flight, 1/4" f/ 62' Models 128 13/16" long *(3.53 m)*
(7)	1039940P	Upper Flight, 1/4" f/ 65' Models 114 3/4" long *(2.91 m)*
8	1039920-230	Mid Tube Section, 62' & 65' f/ Internal Bearing (Hutchinson)
(8)	1039920-330	Mid Tube Section, 62' & 65' f/ Internal Bearing (Mayrath)
9	1043564-230	Upper Tube Section, 62' Models f/ Internal Bearing (Hutch)
(9)	1043564-330	Upper Tube Section, 62' Models f/ Internal Bearing (Mayrath)
(9)	1039921-230	Upper Tube Section, 65' Models f/ Internal Bearing (Hutch)
(9)	1039921-330	Upper Tube Section, 65' Models f/ Internal Bearing (Mayrath)
10	1033444	Connecting Band, 13"

TORQUE CHART

General Torque Specification Table

Use the Following Torques When Special Torques Are Not Given

Note: These values apply to fasteners as received from supplier, dry, or when lubricated with normal engine oil. They do not apply if special graphited or moly-disulphide greases or other extreme pressure lubricants are used. This applies to both UNF and UNC threads.

SAE Grade No.		SAE 2				SAE 5				SAE 8*			
Bolt head identification marks as per grade Note: Manufacturing marks will vary													
		Torque				Torque				Torque			
Bolt Size		Foot Pounds		Newton·Meters		Foot Pounds		Newton·Meters		Foot Pounds		Newton·Meters	
Inches	Millimeters	Min.	Max.	Min.	Max.	Min.	Max.	Min.	Max.	Min.	Max.	Min.	Max.
1/4	6.35	5	6	6.8	8.13	9	11	12.2	14.9	12	15	16.3	20.3
5/16	7.94	10	12	13.6	16.3	17	20.5	23.1	27.8	24	29	32.5	39.3
3/8	9.53	20	23	27.1	31.2	35	42	47.5	57.0	45	54	61.0	73.2
7/16	11.11	30	35	40.7	47.4	54	64	73.2	86.8	70	84	94.9	113.9
1/2	12.70	45	52	61.0	70.5	80	96	108.5	130.2	110	132	149.2	179.0
9/16	14.29	65	75	88.1	101.6	110	132	149.2	179.0	160	192	217.0	260.4
5/8	15.88	95	105	128.7	142.3	150	180	203.4	244.1	220	264	298.3	358.0
3/4	19.05	150	185	203.3	250.7	270	324	366.1	439.3	380	456	515.3	618.3
7/8	22.23	160	200	216.8	271.0	400	480	542.4	650.9	600	720	813.6	976.3
1	25.40	250	300	338.8	406.5	580	696	786.5	943.8	900	1080	1220.4	1464.5
1 1/8	25.58	– – –	– – –	– – –	– – –	800	880	1084.8	1193.3	1280	1440	1735.7	1952.6
1 1/4	31.75	– – –	– – –	– – –	– – –	1120	1240	1518.7	1681.4	1820	2000	2467.9	2712.0
1 3/8	34.93	– – –	– – –	– – –	– – –	1460	1680	1979.8	2278.1	2380	2720	3227.3	3688.3
1 1/2	38.10	– – –	– – –	– – –	– – –	1940	2200	2630.6	2983.2	3160	3560	4285.0	4827.4

*Thick nuts must be used with Grade 8 bolts

AGI HUTCHINSON MAYRATH

MANUFACTURED BY
HUTCHINSON I MAYRATH

P.O. Box 629, 514 W. Crawford Street
Clay Center, Kansas
USA 67432

TF 800.523.6993
P 785.632.2161
F 785.632.5964

hutchinson–mayrath.com