Hutchinson/Mayrath ASSEMBLY INSTRUCTIONS

The following instructions are to be used for assistance with the set-up and installation of equipment, accessories, and serviceable parts used on this machinery and are not meant to replace any operating or safety procedures as outlined in the Operator's Manual included with the auger.

This safety symbol is used throughout these instructions to alert you to information about unsafe actions or situations, and will be followed by the word DANGER, WARNING, or CAUTION. Be Alert! Your safety and the safety of others is involved.

DANGER - Indicates immediate hazards that may result in severe injury or death. **WARNING** - Indicates unsafe actions or situations that may cause severe injury, death and/or major equipment or property damage. **CAUTION** - Indicates unsafe actions or situations that may cause injury, and/or minor equipment or property damage.

COMMERCIAL BIN WELL CONTROL PIPE KITS
for use with
Bin's of 24' to 120' in diameter

KIT PART NO's.

BJ12240C f/ 24', BJ12270C f/ 27', BJ12300C f/ 30', BJ12340C f/ 34', BJ12360C f/ 36', BJ12390C f/ 39', BJ12400C f/ 40', BJ12420C f/ 42', BJ12490C f/ 49', BJ12550C f/ 55', BJ12600C f/ 60', BJ12630C f/ 63', BJ12690C f/ 69', BJ12720C f/ 72', BJ12750C f/ 75', BJ12780C f/ 78', BJ12800C f/ 80', BJ12820C f/ 82', BJ12900C f/ 90', BJ12920C f/ 92', BJ12970C f/ 105', BJ12980C f/ 113', BJ12990C f/ 120'

These instructions cover the installation of the Control Pipe kits *after* the Bin Wells have already been installed.

The control pipe kits were designed to attach to the slide control gates of intermediate wells and the center well for operation of the gates from outside the bin. The kits are used on bins from 24' to 120' in diameter. The optional "Rack & Pinion" controller can be attached to the control pipes to aide in the operation of the gates.

The center bin well will use 1/2" schedule 40 pipe (7/8" o.d.) of various lengths, and the intermediate wells will use 1" schedule 40 pipe (1 5/16" o.d.) of various lengths. For larger diameter bins, the control pipes are made up of two or more sections of pipe. The 7/8" diameter sections are attached together with an internal threaded coupler (See Page 5). This coupling system is a significant innovation that allows the coupling of control pipe sections together without interfering with guides or bin well walls.

The 1 5/16" diameter control pipe sections are fastened together with a bolt-on coupler (See Page 5). The control pipes are predrilled for the addition of the coupler. **NOTE: Control pipe guides are available. These are required when there is a large span between bin wells (this is to prevent the control pipes from sagging which otherwise can cause misalignment and binding of the pipes).**

When using pipe guides, make sure to position the guide(s) so they do not interfere with the movement of the coupler used on the 1 5/16" diameter control pipe(s).

The chart on Page 3 shows the length of control pipes required for the different bin diameters. The chart also shows the required spacing between the intermediate wells. The illustration on Page 4 shows a reference for the well spacing dimensions given in the chart. Refer to the installation instructions that come with the bin wells for proper assembly and installation instructions.

The hardware used to attach the control pipes to the bin well gates is included with the bin well kits.

Refer to the instructions that come with the optional Rack & Pinion controller for proper assembly and operating instructions of the Rack & Pinion control.

©2011 Hutchinson/Mayrath All Rights Reserved
Clay Center, KS. Printed in the USA

Control Pipe Dimension Chart

BIN DIAMETER	E SPACING BETWEEN INT. WELLS	NUMBER OF INT. WELLS	LENGTH OF CONTROL RODS							
					ALL OF THESE USE 18" (45.7 cm) LONG PIECE OF 1/2" SCH. 40 TO CONNECT TO R&P					
			CENTER WELL **A**		INT. WELL (1&2) **B**		INT. WELL (3&4) **C**		INT. WELL (5&6) **D**	
			LENGTH ASSY.	LENGTH OF SECTIONS	LENGTH ASSY.	LENGTH OF SECTIONS	LENGTH ASSY.	LENGTH OF SECTIONS	LENGTH ASSY.	LENGTH OF SECTIONS
FEET (*meters*)	FEET (*meters*)		FEET (*meters*)	FEET (*meters*)	FEET (*meters*)	FEET (*meters*)	FEET (*meters*)	FEET (*meters*)	FEET (*meters*)	FEET (*meters*)
* 24' (*7.32 m*)	53" (*1.35 m*)	2	12' 8" (*3.86 m*)	12' 8" (*3.86 m*)	8'11" (*2.72 m*)	8'11" (*2.72 m*)	4' 6" (*1.37 m*)	4' 6" (*1.37 m*)		
* 27' (*8.23 m*)	71" (*1.80 m*)	2	14' 2" (*4.32 m*)	14' 2" (*4.32 m*)	10' 5" (*3.18 m*)	10' 5" (*3.18 m*)	4' 6" (*1.37 m*)	4' 6" (*1.37 m*)		
30' (*9.14 m*)	69" (*1.75 m*)	2	15' 8" (*4.78 m*)	15' 8" (*4.78 m*)	10' 5" (*3.18 m*)	10' 5" (*3.18 m*)	4' 6" (*1.37 m*)	4' 6" (*1.37 m*)		
33'-34' (*10.06-10.36 m*)	78" (*1.98 m*)	2	17' 6" (*5.33 m*)	17' 6" (*5.33 m*)	11' 6" (*3.51 m*)	11' 6" (*3.51 m*)	4' 6" (*1.37 m*)	4' 6" (*1.37 m*)		
36' (*10.97 m*)	58" (*1.47 m*)	3	18' 6" (*5.64 m*)	18' 6" (*5.64 m*)	14' 2" (*4.32 m*)	14' 2" (*4.32 m*)	9' 4" (*2.84 m*)	9' 4" (*2.84 m*)		
37'-39' (*11.28-11.89 m*)	60" (*1.52 m*)	3	20' 0" (*6.10 m*)	20' 0" (*6.10 m*)	15' 6" (*4.72 m*)	15' 6" (*4.72 m*)	10' 6" (*3.20 m*)	10' 6" (*3.20 m*)		
40' (*12.19 m*)	66" (*1.68 m*)	3	20' 6" (*6.25 m*)	20' 6" (*6.25 m*)	15' 6" (*4.72 m*)	15' 6" (*4.72 m*)	10' 0" (*3.05 m*)	10' 0" (*3.05 m*)		
42' (*12.80 m*)	52 1/2" (*1.33 m*)	4	21' 6" (*6.55 m*)	20' 0" & 1' 6" (*6.10 & 0.46 m*)	17' 8" (*5.38 m*)	17' 8" (*5.38 m*)	8' 11" (*2.72 m*)	8' 11" (*2.72 m*)		
48'-49' (*14.63-14.94 m*)	61 1/2" (1.56 m)	4	25' (*7.62 m*)	20' 0" & 5' 0" (*6.10 & 1.52 m*)	20' 6" (*6.25 m*)	20' 6" (*6.25 m*)	10' 1 1/2" (*3.09 m*)	10' 1 1/2" (*3.09 m*)		
54'-55' (*16.46-16.76 m*)	70 1/2" (1.79 m)	4	28' (*8.53 m*)	20' 0" & 8' 0" (*6.10 & 2.44 m*)	22' 7 1/2" (*6.90 m*)	12' 6" & 10' 1" (*3.81 & 3.07 m*)	10' 10 1/2" (*3.31 m*)	10' 10 1/2" (*3.31 m*)		
** 60' (*18.29 m*)	79 1/2" (2.02 m)	4	30' 6" (*9.30 m*)	20' 0" & 10' 6" (*6.10 & 3.20 m*)	24' 4 1/2" (*7.43 m*)	14' 3" & 10' 1" (*4.34 & 3.07 m*)	14' 3" (*4.34 m*)	14' 3" (*4.34 m*)		
** 63' (*19.20 m*)	84" (2.13 m)	4	32' (*9.75 m*)	20' 0" & 12' 0" (*6.10 & 3.66 m*)	25' 6 1/2" (*7.79 m*)	14' 3" & 11' 3" (*4.34 & 3.43 m*)	14' 3" (*4.34 m*)	14' 3" (*4.34 m*)		
68'-69' (*20.73-21.03 m*)	80" (2.03 m)	4	35' (*10.67 m*)	20' 0" & 15' 0" (*6.10 & 4.57 m*)	28' 1/2" (*8.55 m*)	14' 3" & 13' 9" (*4.34 & 4.19 m*)	12' 6" (*3.81 m*)	12' 6" (*3.81 m*)		
72' (*21.95 m*)	97 1/2" (2.48 m)	4	36' 6" (*11.13 m*)	20' 0" & 16' 6" (*6.10 & 5.03 m*)	28' 10 1/2" (*8.80 m*)	14' 3" & 14' 7" (*4.34 & 4.45 m*)	12' 7" (*3.84 m*)	12' 7" (*3.84 m*)		
75' (*22.86 m*)	102" (2.59 m)	4	38' (*11.58 m*)	20' 0" & 18' 0" (*6.10 & 5.49 m*)	30' 1/2" (*9.16 m*)	14' 3" & 15' 9" (*4.34 & 4.80 m*)	13' 0" (*3.96 m*)	13' 0" (*3.96 m*)		
** 78' (*23.77 m*)	106 1/2" (2.71 m)	4	39' 6" (*12.04 m*)	20' 0" & 19' 6" (*6.10 & 5.94 m*)	31' 1 1/2" (*9.49 m*)	18' 7" & 12' 6" (*5.66 & 3.81 m*)	14' 6 1/2" (*4.43 m*)	14' 6 1/2" (*4.43 m*)		
80' (*24.38 m*)	107 (2.72 m)	4	40' 6" (*12.34 m*)	20' 0" & 20' 6" (*6.10 & 6.25 m*)	32' 1 1/2" (*9.79 m*)	18' 7" & 13' 6" (*5.66 & 4.11 m*)	18' 7" (*5.66 m*)	18' 7" (*5.66 m*)		
82' (*24.99 m*)	112 1/2" (2.86 m)	4	41' 6" (*12.65 m*)	20' 0" & 20' 0" & 1' 6" (*6.10 & 6.10 & .46 m*)	32' 7 1/2" (*9.94 m*)	18' 7" & 14' 0" (*5.66 & 4.27 m*)	14' 2" (*4.32 m*)	14' 2" (*4.32 m*)		
** 90' (*27.43 m*)	124 1/2" (3.16 m)	4	45' 6" (*13.87 m*)	20' 0" & 20' 0" & 5' 6" (*6.10 & 6.10 & 1.68 m*)	35' 7 1/2" (*10.86 m*)	18' 7" & 17' 0" (*5.66 & 5.18 m*)	13' 9" (*4.19 m*)	13' 9" (*4.19 m*)		
92' (*28.04 m*)	102" (2.59 m)	5	46' 6" (*14.17 m*)	20' 0" & 20' 0" & 6' 6" (*6.10 & 6.10 & 1.98 m*)	38' 7 1/2" (*11.77 m*)	18' 7" & 20' 0" (*5.66 & 6.10 m*)	21' 6 1/2" (*6.57 m*)	15' 9" & 5' 9" (*4.80 & 1.75 m*)	4' 6" (*1.37 m*)	4' 6" (*1.37 m*)
105' (*32.00 m*)	117 1/2" (2.98 m)	5	53' (*16.15 m*)	20' 0" & 20' 0" & 13' 0" (*6.10 & 6.10 & 3.96 m*)	44' 5" (*13.54 m*)	18' 7" & 20' 0" & 5' 9" (*5.66 & 6.10 & 1.75 m*)	24' 4 1/2" (*7.43 m*)	18' 7" & 5' 9" (*5.66 & 1.75 m*)	4' 6" (*1.37 m*)	4' 6" (*1.37 m*)
** 113' (*34.44 m*)	106" (2.69 m)	6	57' (*17.37 m*)	20' 0" & 20' 0" & 17' 0" (*6.10 & 6.10 & 5.18 m*)	49' 5" (*15.06 m*)	18' 7" & 17' 0" & 13' 9" (*5.66 & 5.18 & 4.19 m*)	31' 1 1/2" (*9.49 m*)	18' 7" & 12' 6" (*5.66 & 3.81 m*)	14' 3" (*4.34 m*)	14' 3" (*4.34 m*)
** 120' (*36.58 m*)	113" (2.87 m)	6	60' 6" (*18.44 m*)	20' 0" & 20' 0" & 20' 6" (*6.10 & 6.10 & 6.25 m*)	51' 5" (*15.67 m*)	18' 7" & 17' 0" & 15' 9" (*5.66 & 5.18 & 4.80 m*)	32' 10 1/2" (*10.02 m*)	18' 7" & 14' 3" (*5.66 & 4.34 m*)	14' 3" (*4.34 m*)	14' 3" (*4.34 m*)

* INNER INTERMEDIATE SHOULD BE PLACED AS CLOSE TO CENTER WELL AS POSSIBLE

** SPACING BETWEEN WELLS MAY VARY DUE TO CONNECTING BAND BEING LOCATED WHERE WELLS WOULD BE LOCATED IF EQUALLY SPACED.

Control Pipe Layout

24' to 34' Bin Dia.

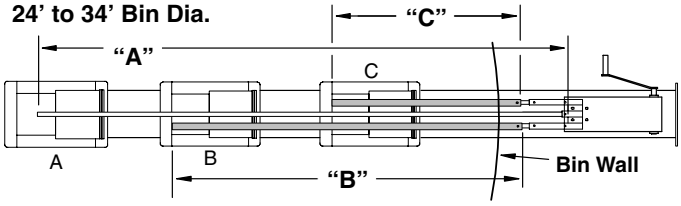

Center well (A) uses 7/8" dia. control pipe
Intermediate wells (B & C) use 1 5/16" dia. control pipes

The illustrations shown refer to the overall length of the control pipe sections. Larger diameter bins will use two or more control pipe sections to operate a specific set of bin wells and/or the center well.
See Chart on Page 2 for individual control pipe lengths used with their respective bin diameters.

36' to 40' Bin Dia.

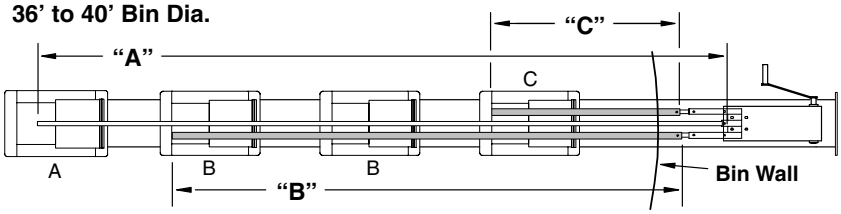

Center well (A) uses 7/8" dia. control pipe
Intermediate wells (B & C) use 1 5/16" dia. control pipes

42' to 90' Bin Dia.

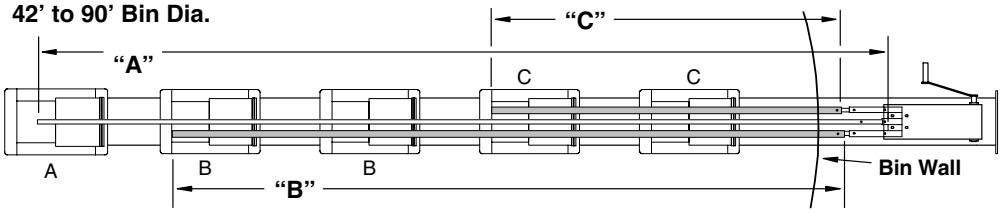

Center well (A) uses 7/8" dia. control pipes
Intermediate wells (B & C) use 1 5/16" dia. control pipes

92' to 105' Bin Dia.

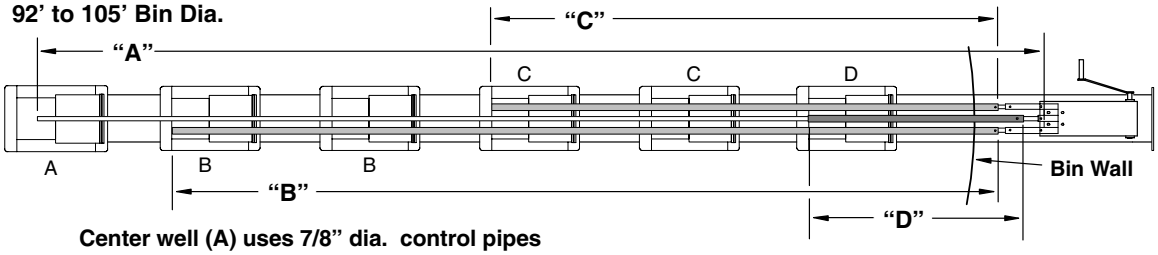

Center well (A) uses 7/8" dia. control pipes
Intermediate wells (B, C & D) use 1 5/16" dia. control pipes
Note: 7/8" Center Well Control Pipe (A) Passes Through the 1 5/16" Control Pipe (D)

113' to 120' Bin Dia.

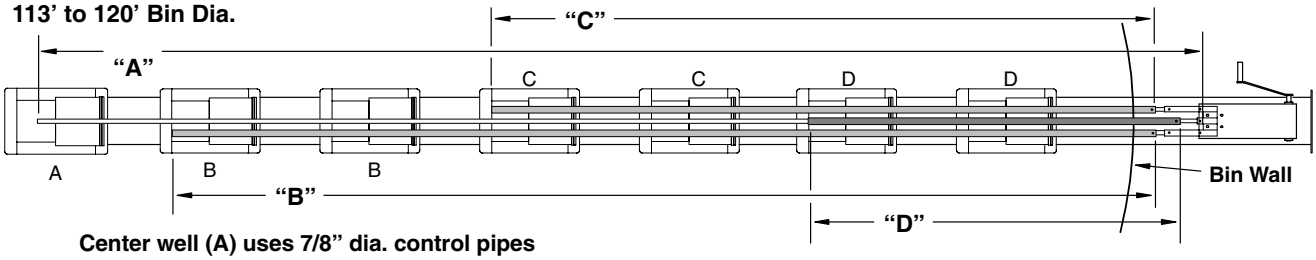

Center well (A) uses 7/8" dia. control pipes
Intermediate wells (B, C & D) use 1 5/16" dia. control pipes
Note: 7/8" Center Well Control Pipe (A) Passes Through the 1 5/16" Control Pipe (D)

Bin Well Information

After all bin wells have been properly assembled, the control pipes can be installed. The illustration shows the recommended dimension (“E”) for intermediate well spacing for use with these control pipe kits.

The intermediate well located nearest to the bin wall needs to be 40” from the center of the well opening to the bin wall (See illustration below). The remaining intermediate well locations will be spaced using the measurements in the chart on Page 2 (beginning at the center of the well opening on the intermediate well nearest the bin wall).

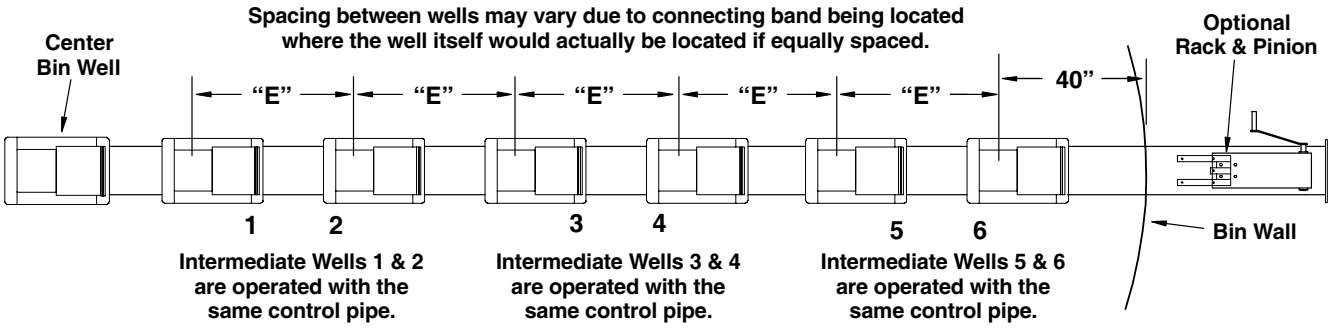

Control Pipe Information

All control pipe kits include two (2) 7/8” o.d. x 18” long pipe sections that have a predrilled hole at one end. These sections will be used for the **intermediate well control pipe** connection to the Rack & Pinion device. The end with the hole will attach to the Rack & Pinion, the opposite end will need to have a hole drilled after control pipes have been fastened to the well gates and the Rack & Pinion device has been installed.

The control pipes will be installed through the bin flange from the outside of the bin. Make sure the correct knock-outs have been punched out of the bin flange (see illustration below). Assemble the control pipes using the lengths and positions shown in the Chart on Page 2 and in the illustration on Page 3.

The larger diameter bins use two (2) or more control pipe sections. Start with the shortest section of pipe at the intermediate well nearest the center well, then add the longer section(s) as you work towards the Rack & Pinion device on the outside of the bin.

When two or more of the 7/8” o.d. control pipes are required, one end of each pipe section will have internal threads for the coupler connection. When two or more 1 5/16” o.d. pipe sections are used, one end of each pipe will have two (2) holes used for the bolt-on coupler connection (See Fig. 1).

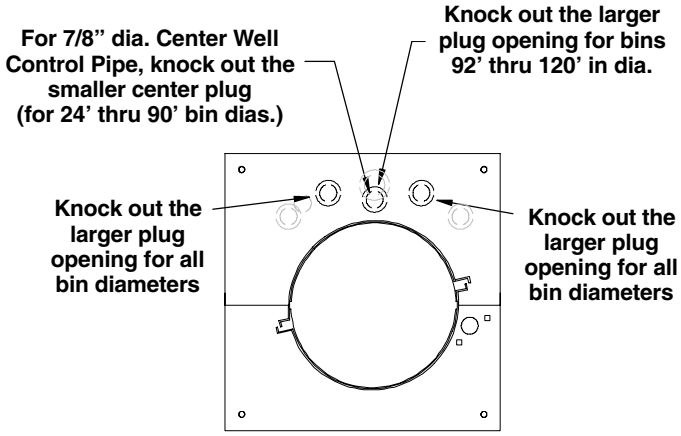

Control Pipe Installation

CAUTION! To help prevent personal injury, always wear the proper personal protective gear.

Gloves, hearing protection, safety glasses and face shield should be worn when working with metal materials.

NOTE: Some control pipe sections will have one (1) 3/8" dia. hole predrilled through one of the ends. This hole will be used to attach the control pipe to the Rack & Pinion Device. Make sure this end of the control pipe is properly positioned.

When more than one control pipe is used, start with the shortest section at the intermediate well nearest the center well and work your way with the longer sections towards the Rack & Pinion device. Attach the sections together using the appropriate coupler (See Fig. 1).

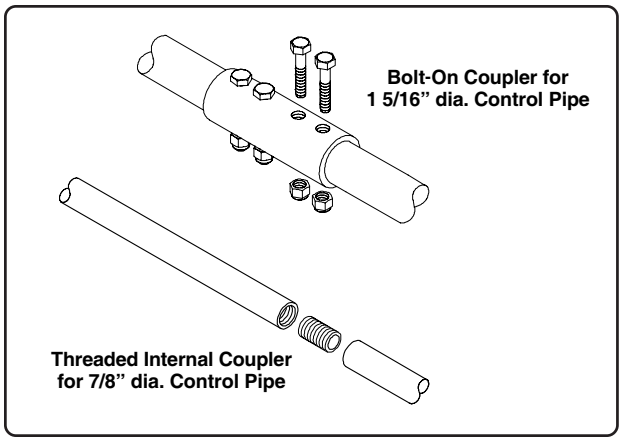

Fig. 1

1. Remove the bin well flanged covers from the top of the bin wells (this will allow easy access for the installation of the well gates to the control pipes).

   The front and rear of the bin wells have knock-outs for the control pipes to pass through (the smaller opening for the center well control pipe is already punched out).

   Punch the appropriate knock-outs from the well bodies for the intermediate well control pipes and pass each pipe through the bin well(s) as necessary to reach its respective well gate.

   When a control pipe reaches the last well in its respective set, do not punch out the knock-out in the back of that well that the control pipe is aligned with (See Fig. 2).

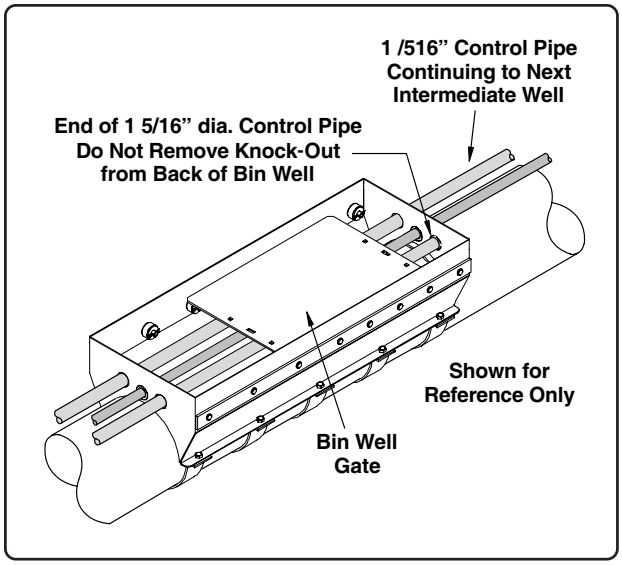

Fig. 2

NOTE: On bins using 5 & 6 intermediate wells, the 7/8" o.d. center well control pipe is inserted into the 1 5/16" o.d. intermediate well control pipe.

For 5 well applications, punch out the larger knock-out around the center hole on front of the well closest to the bin wall.

For 6 well applications, punch out the larger hole on the front & rear of the well nearest the bin wall and punch out the larger hole in the front only of the next well in succession (See Fig. 3).

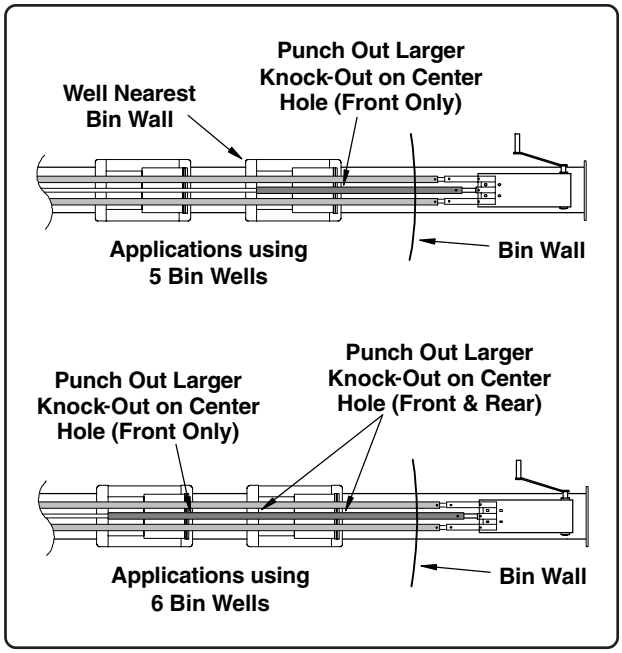

Fig. 3

Control Pipe Installation (con't.)

- If using the band-on control pipe guides, make sure to position the guide(s) so they do not interfere with the movement of the coupler used on the 1 5/16" dia. pipes (See Fig. 4).

  Secure the guides using two (2) 5/16" x 1 1/2" bolts and non-lock nuts.

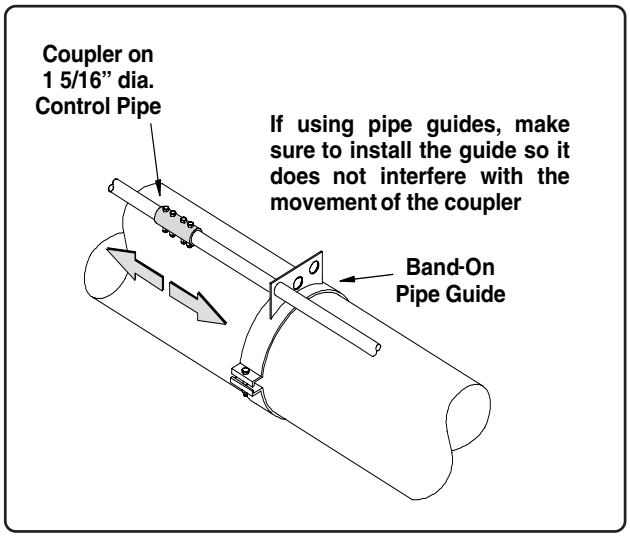

Fig. 4

2. After all control pipes have been properly installed, the Rack & Pinion controller can be installed.

   Position the Rack & Pinion onto the unload tube outside the bin and loosely attach with the half-bands securing the controller to the unload tube using the 5/16" x 1 1/2" bolts and non-lock nuts provided.

   Slide the 18" pipe extensions into the two outside sleeves of the Rack and Pinion controller. Align the holes in the sleeves with the holes in the extensions and temporarily secure the extensions using a snap pin or a 5/16" x 1 3/4" bolt and nut (See Fig. 5).

3. Place the handle of the controller to the full forward position. Slide the controller towards the bin while inserting the center well control pipe into the center sleeve of the controller and the 18" extensions into the intermediate well control pipes. Secure the center well control pipe to the sleeve using a snap pin or a 5/16" x 1 3/4" bolt and nut.

4. Verify the center well control pipe extends far enough inside the center well to allow the slide gate to be attached to the control pipe when the slide gate is in the fully closed position.

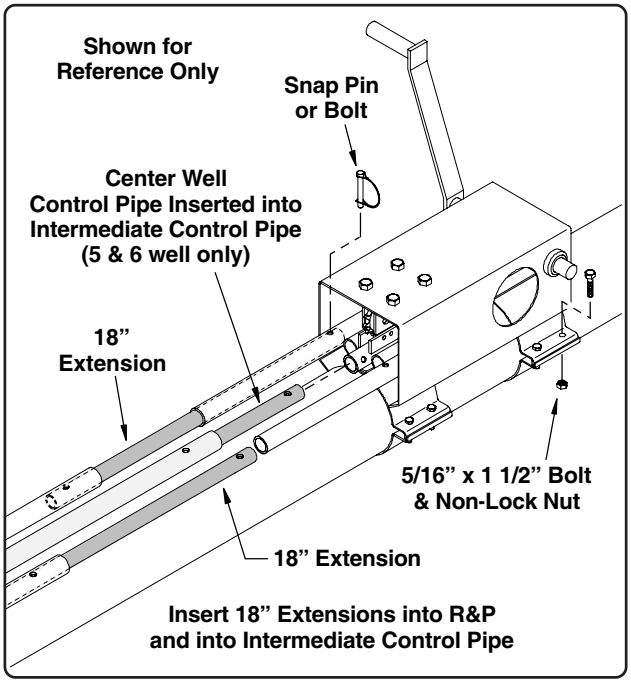

Fig. 5

5. With the gate fully closed, position the gate control clamp over the control pipe aligning the mounting holes of the clamp with the holes in the gate.

   Mark the control pipe through the slot of the clamp and drill a 3/8" diameter hole through the control pipe at this mark.

   Secure the clamp using two (2) 5/16" x 3/4" carriage bolts, flat washers, lock washers and non-lock nuts (carriage bolts will be inserted from the bottom side of gate, See Fig. 6).

   Insert the 5/16" x 1 3/4" roll pin into the hole previously drilled to secure control pipe to clamp.

6. After the control pipe has been attached, verify the well gate is completely closed when the sleeves of the Rack & Pinion controller are in the full forward position (towards bin).

   If necessary, reposition the Rack & Pinion controller to ensure the well gate is fully closed. Once properly positioned, tighten the half-bands to secure the controller to the unload tube.

   Leave the center well in its fully closed position and begin attaching the slide gates to the intermediate wells.

Control Pipe Installation (con't.)

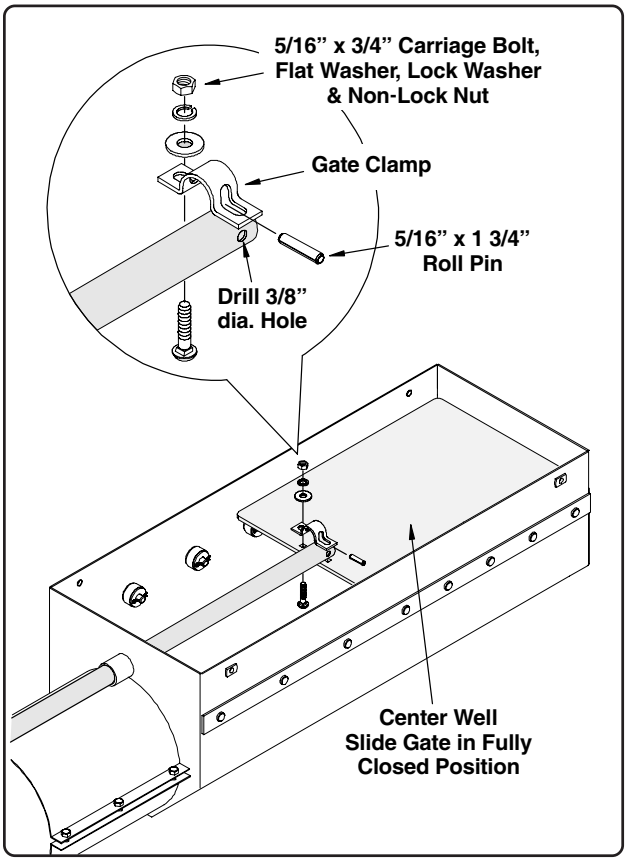

Fig. 6

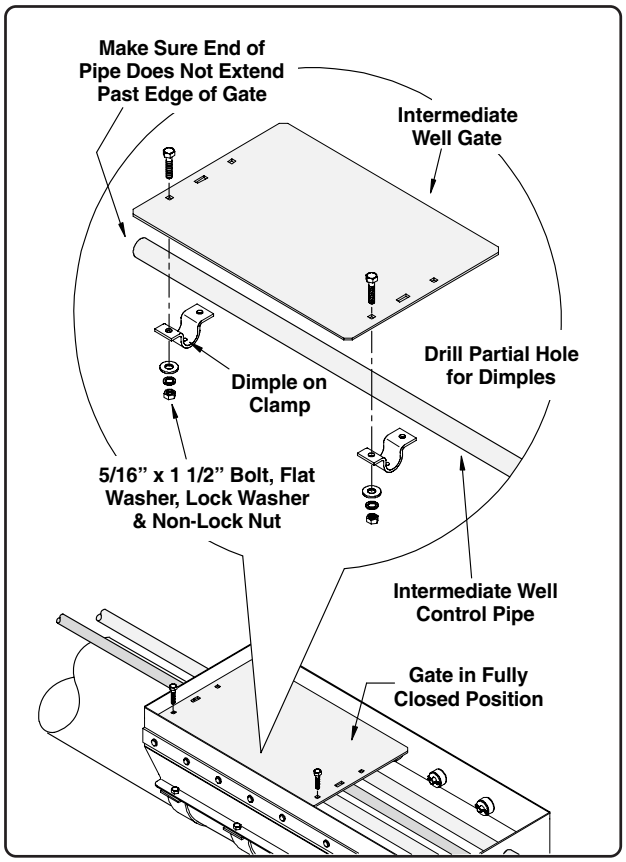

Fig. 7

Note the small dimple on the gate control clamps. A 3/8" dia. hole will need to be partially drilled into the control pipe to accommodate the dimple (the hole does not need to be drilled all the way through the pipe, just deep enough to allow the clamp to be flush against the control pipe).

When attaching the gates to the control pipes that do not pass through the well body, make sure the end of the pipe does not extend past the edge of the gate, otherwise the gate will not be able to be fully closed (See Fig. 7).

The gates can be used for either the inner or outer wells. Just flip the gate over to align the mounting holes with the control pipe (See Fig. 8).

7. Position the slide gates in the intermediate wells so they are in the fully closed position. Place the gate clamps in their appropriate position to determine where the holes for the dimples will need to be drilled.

   After holes for dimples have been drilled, secure the clamps to the control pipes and slide gates using four (4) 5/16" X 1 1/2" bolts, flat washers, lock washers and non-lock nuts.

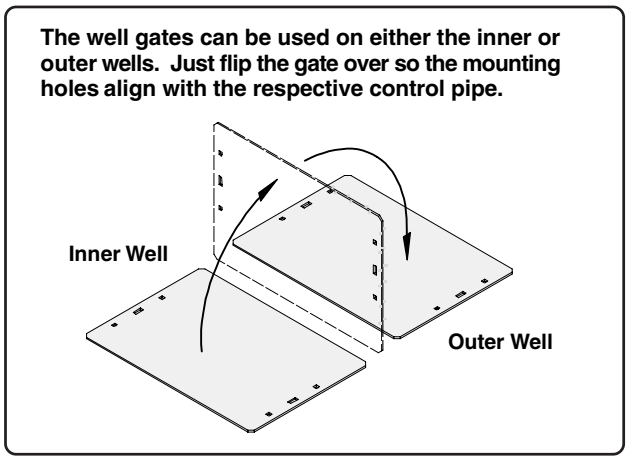

Fig. 8

8. After all slide gates have been installed, position the control pipes so the gates are fully closed. Verify the sleeves on the Rack and Pinion are in the full forward position (towards bin) and the center well gate is still closed.

Control Pipe Installation (con't.)

9. The end of the control pipes connected to the 18" extensions have a predrilled hole. Use this hole as a template and drill a 3/8" dia. hole through the extension pipe (on 5 & 6 well applications, drill through the center well control pipe as well, See Fig. 9).
   Use a snap pin or 5/16" x 1 3/4" bolt and lock nut to secure the control pipes to the extensions and if applicable, to the center well control pipe.
10. Operate the Rack & Pinion handle to verify all slide gates function properly. Make any necessary adjustments.

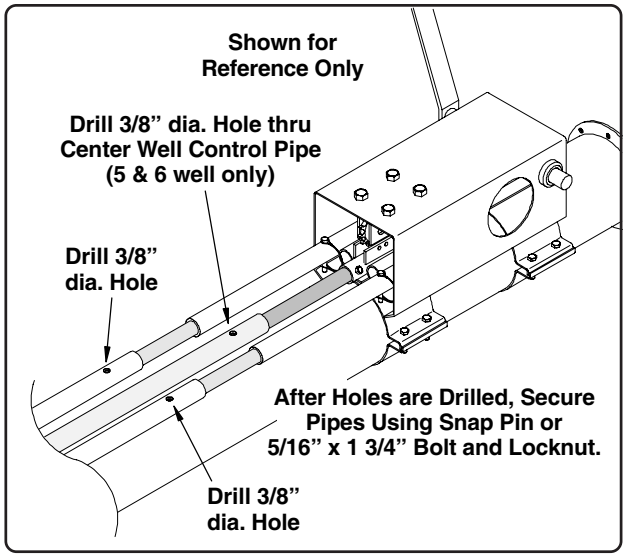

Fig. 9

Using Bin Wells

IMPORTANT! To prevent dangerous stress levels from occurring within the bin wall, *Do Not* open the intermediate wells until grain flow has stopped at the center well. Refer to the bin manufacturers manual for information on stress analysis and safety precautions for proper bin loading and unloading recommendations.

The following information is a brief summary of the operation of the control pipes and bin wells.

Refer to the manual supplied with the bin well kits, sweep auger, or with the unload system for the proper operation of bin unloading procedures.

When using intermediate wells, they should be opened ***after*** grain has stopped flowing through the center well.

Open center well gate until desired flow is established, usually 3" to 6" is sufficient (to open only center well gate, remove pins from the inner and outer controller sleeves, for 5 and 6 wells also remove the pin from the intermediate/center well pipe connection See Fig. 10).

After all grain has stopped flowing from the center well, the intermediate wells can be opened.

Begin with the inner intermediate well(s), these are the wells nearest to the center well. Remove the pin that attaches the 18" extension pipe to the controller sleeve for the outer intermediate wells (See Fig. 10). **For 5 & 6 well applications, also remove the pin for the intermediate/center well pipe connection.**

Gradually open the first (inner) set until desired grain flow has been obtained (leave center well open as the intermediate wells are being used).

After grain has stopped flowing from the first set of intermediate wells, replace the pin in the control pipe for the outer set of wells and gradually open these wells for desired flow (the center well and first set of intermediate wells will also be opened).

If using a 5th and 6th outer intermediate well, these well gates will be opened next. Replace the pin in the intermediate/center well pipe connection and gradually open these wells.

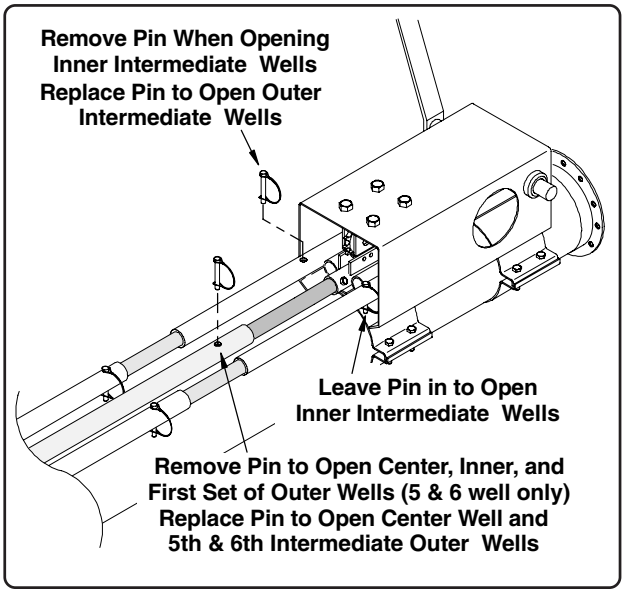

Fig. 10

Control Pipe Parts List

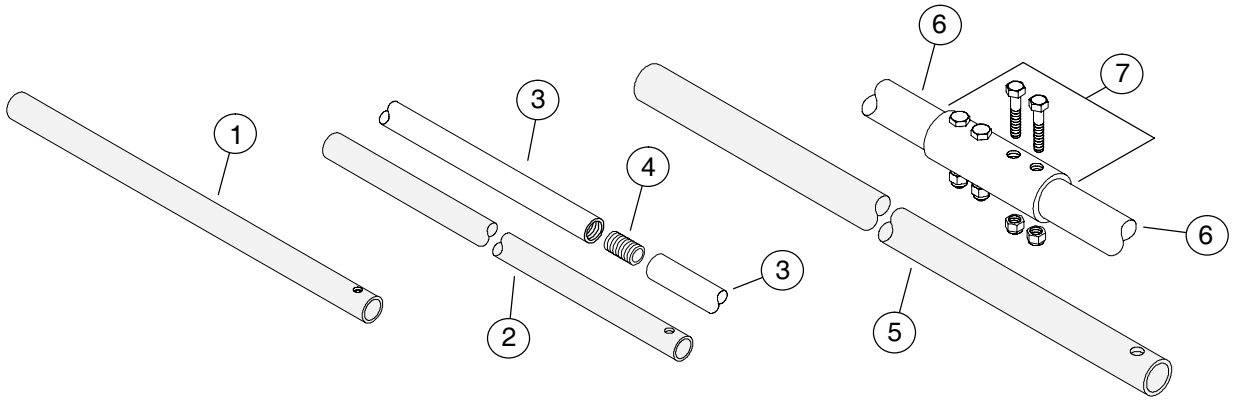

Control Pipes & Couplers

REF. NO.	PART NO.	DESCRIPTION
1	1038844	ƒ Extension, 18” long
2	1038845	ƒ Control Pipe, 152” long
(2)	1038852	ƒ Control Pipe, 170” long
(2)	1038855	ƒ Control Pipe, 188” long
(2)	1038857	ƒ Control Pipe, 210” long
(2)	1038860	ƒ Control Pipe, 222” long
3	1038870	ƒƒ Control Pipe, 240” long
(3)	1038874	ƒƒ Control Pipe, 246” long
(3)	1038877	ƒƒ Control Pipe, 18” long
(3)	1038880	ƒƒ Control Pipe, 60” long
(3)	1038886	ƒƒ Control Pipe, 96” long
(3)	1038898	ƒƒ Control Pipe, 126” long
(3)	1038907	ƒƒ Control Pipe, 144” long
(3)	1038911	ƒƒ Control Pipe, 180” long
(3)	1038914	ƒƒ Control Pipe, 198” long
(3)	1038918	ƒƒ Control Pipe, 216” long
(3)	1038923	ƒƒ Control Pipe, 234” long
(3)	1038929	▽ Control Pipe, 240” long
(3)	1038933	ƒƒ Control Pipe, 66” long
(3)	1038937	ƒƒ Control Pipe, 78” long
(3)	1038979	ƒƒ Control Pipe, 156” long
(3)	1038982	ƒƒ Control Pipe, 204” long
4	41089	Coupler f/ 1/2” SCH 40 pipe
5	1038846	* Control Pipe, 107” long
(5)	1038847	* Control Pipe, 54” long
(5)	1038853	* Control Pipe, 125” long
(5)	1038858	* Control Pipe, 138” long
(5)	1038861	* Control Pipe, 170” long
(5)	1038862	* Control Pipe, 112” long
(5)	1038871	* Control Pipe, 186” long
(5)	1038872	* Control Pipe, 126” long
(5)	1038875	* Control Pipe, 120” long
(5)	1038878	* Control Pipe, 212” long
(5)	1038881	* Control Pipe, 246” long
(5)	1038882	* Control Pipe, 121 1/2” long
6	1038887	◊ Control Pipe, 150” long
(6)	1038888	◊ Control Pipe, 121” long
(6)	1038889	◊ Control Pipe, 130 1/2” long
(6)	1038899	◊ Control Pipe, 171” long
(6)	1038908	◊ Control Pipe, 135” long
(6)	1038912	◊ Control Pipe, 165” long
(6)	1038915	◊ Control Pipe, 175” long
(6)	1038916	◊ Control Pipe, 151” long
(6)	1038919	◊ Control Pipe, 189” long
(6)	1038920	◊ Control Pipe, 156” long
(6)	1038924	◊ Control Pipe, 223” long
(6)	1038925	◊ Control Pipe, 174 1/2” long
(6)	1038927	◊ Control Pipe, 162” long
(6)	1038930	◊ Control Pipe, 168” long
(6)	1038934	◊ Control Pipe, 204” long
(6)	1038938	◊ Control Pipe, 240” long
(6)	1038939	◊ Control Pipe, 69” long
(6)	1038980	◊ Control Pipe, 240” long
(6)	1038983	◊ Control Pipe, 204” long
7	1038885	Coupler f/ 1” SCH 40 pipe
(7)	31009	•Coupler
(7)	33375	•Bolt, 3/8-16 x 2 1/2”
(7)	33136	•Nut, 3/8-16 Nylon Lock

ƒ 1/2” SCH 40 Pipe
ƒƒ 1/2” SCH 40 Pipe, Tapped
▽ 1/2” SCH 40 Pipe, Tapped Both Ends
* 1” SCH 40 Pipe
◊ 1” SCH 40 Pipe w/ Holes for Coupler
• Indented parts names indicate these parts are included in the previous assembly.

Hutchinson/Mayrath

*A Division of **GLOBAL** Industries Inc.*

Hutchinson/Mayrath • P.O. Box 629 • Clay Center, KS. 67432
Ph. 785–632–2161 • Fx. 785–632–5964 • Toll Free 800–523–6993
www.hutchinson-mayrath.com