10” TRANSFER BELT CONVEYOR

OWNER’S & OPERATOR’S MANUAL

Effective October 10, 2012 **Publication No. 1024543**

THIS MANUAL IS FOR UNITS WITH SERIAL NUMBERS OF 946062 OR HIGHER.

Hutchinson/Mayrath

A Division of GLOBAL Industries, Inc.

P.O. Box 629 • 514 W. Crawford • Clay Center, KS 67432

Phone 785-632-2161 • 1-800-523-6993 • FAX 785-632-5964

www.hutchinson-mayrath.com

Hutchinson/Mayrath

A Division of **GLOBAL** Industries, Inc.

POLICIES AND PROCEDURES

PRICES: Prices in effect at time of shipment will apply. Prices are subject to change without notice. All prices are F.O.B. Clay Center, Kansas. Orders shipped from locations other than Clay Center, Kansas will be subject to additional charges, such as back freight and/or additional freight.

SERVICE CHARGE: A service charge will be assessed on all past due balances as permitted by state law not to exceed 1-1/2% per month.

MIINMUM ORDER: Processing and handling costs necessitate a minimum charge of $15.00 net on all orders.

BACK ORDERS: Back orders will be shipped as they become available. Contact Hutchinson/Mayrath Customer Service for alternative shipping options or if cancellation is desired.

DAMAGED GOODS: It is the consignee's responsibility to check all shipments thoroughly upon receipt of goods. If any damage is discovered, it must be noted on the freight bill of lading before signing. The consignee must make necessary claims against the respective freight line. All damage claims must be submitted within 30 days of delivery receipt.

SHORTAGES: All shortages must be noted at time of delivery receipt. Shortages must be noted on the freight bill of lading before signing. Hutchinson/Mayrath must be advised of all concealed shortages upon discovery. Once notified of concealed shortages Hutchinson/Mayrath will advise corrective action to be taken.

RETURN OF GOODS: All returns must be approved by Hutchinson/Mayrath prior to shipment. All return requests will be issued a return authorization number. NO RETURNS WILL BE ACCEPTED WITHOUT A RETURN AUTHORIZATION NUMBER AND PRIOR AUTHORIZATION FROM THE FACTORY. All returns must be shipped prepaid. A 15% restocking charge will be applied to all returned merchandise. Custom products may not be returned for credit. Only current products in new and saleable condition may be returned. No safety devices may be returned for credit.

MODIFICATIONS: It is the policy of Hutchinson/Mayrath to improve its product whenever possible and practical to do so. We reserve the right to make changes, improvements and modifications at any time without incurring the obligation to make such changes, improvements and modifications on any equipment sold previously.

LIMITED WARRANTY: (a) For a period of (1) year after receipt of goods by the original consumer buyer, Hutchinson/Mayrath will supply free of charge replacement parts for parts that prove defective in workmanship or material. Defective parts must be returned freights prepaid to a specified Hutchinson/Mayrath location. Only Hutchinson/Mayrath original repair parts may be used for warranty repairs.
(b) This limited warranty does not extend to parts designed to wear in normal operation and be replaced periodically, or to damage caused by negligence, accident, abuse or improper installation or operation.
(c) GOODS NOT MANUFACTURED BY HUTCHINSON/MAYRATH CARRY ONLY THE MANUFACTURER'S WARRANTY.
(d) THIS UNDERTAKING IS IN LIEU OF ALL OTHER WARRANTIES, EXPRESSED OR IMPLIED, INCLUDING MERCHANTABILITY AND FITNESS FOR A PARTICULAR PURPOSE.

FAILURE TO FOLLOW THE INSTRUCTIONS CONTAINED IN THE OWNER'S & OPERATOR'S MANUALS AND THE ITEMS LISTED BELOW WILL RESULT IN THE VOIDING OF THIS LIMITED WARRANTY.

(1) Improper assembly, including failure to properly install all safety equipment.
(2) Improper installation (power & wiring included)
(3) Unauthorized alterations of goods.
(4) Goods operated when obviously in need of repair.
(5) Use of unauthorized repair parts.
(6) Irresponsible operation.
(7) Used to handle materials other than free flowing, non-abrasive and dry materials, as intended.
(8) Damaged through abusive use or accident.

LIMITATION OF LIABILITY: BUYER AGREES THAT IN NO EVENT SHALL HUTCHINSON/MAYRATH HAVE LIABILITY FOR DIRECT DAMAGES IN EXCESS OF THE CONTRACT PRICE OF THE GOODS IN RESPECT TO WHICH CLAIM IS MADE. BUYER FURTHER AGREES THAT IN NO EVENT SHALL HUTCHINSON/MAYRATH ON ANY CLAIM OF ANY KIND HAVE LIABILITY FOR LOSS OF USE, LOSS OF PROFITS, OR FOR ANY INDIRECT, INCIDENTAL OR CONSEQUENTIAL DAMAGES.

GENERAL SAFETY STATEMENT

This manual was written with the safety of the operator and others who work with the equipment as our prime concern. The instructions presented will help the reader learn SAFE day to day work practices. We want you as our partner in safety.

It is your responsibility as an owner, operator or supervisor to know what specific safety requirements and precautions exist and to make these known to all other personnel working with the equipment or in the area, so that they too may safely perform their duties and avoid any potentially hazardous situations.

Please remember safety equipment provides important protection for persons around a grain handling system that is in operation. Be sure ALL the safety shields and protection devices are installed and properly maintained. If any shields or guards are damaged or missing, contact your dealer to obtain the correct items.

Avoid any alterations of the equipment. Such alterations may create a dangerous situation where serious injury or death may occur.

SAFETY ALERT SYMBOL

The symbol shown below is used to call your attention to instructions concerning your personal safety. Watch this symbol - it points out important safety precautions. It means "ATTENTION! Become alert! Your personal safety is involved!" Read the message that follows and be alert to the possibility of personal injury or death.

BE ALERT!

YOUR SAFETY IS INVOLVED

WARNING

Anyone who will operate or work around this machine shall first read this manual! This manual must be delivered with the equipment to its owner. Failure to read this manual and its safety instructions is a misuse of the equipment.

TABLE OF CONTENTS

General Safety Statements 1

Safety Symbol 1

Operator Qualifications 3

Sign-off Sheet 3

Machine Inspection 3

Conveyor Features 4

TRANSPORTING THE CONVEYOR 5

DESIGNATED WORK AREA 6

OPERATING PROCEDURES 7-9
- Electric Drive Operation 7
- Hydraulic Drive Operation 8
- Shutdown 9
- Lockout 9
- Operating Capacities 9

LUBRICATION AND MAINTENANCE 10-11

ASSEMBLY INSTRUCTIONS 12-32
- Inlet to Discharge Assembly 12
- Conveyor Undercarriage Assembly 12-14
- Conveyor Belt 15-17
- Inlet Hopper Assembly 18-20
- Discharge Spout and Push Handle 21
- Electric Drive Assembly 22-23
- Hydraulic Drive Assembly 24-25
- Wind Guard Assembly 26
- Swing Away Kit Assembly 27-28
- Towing Kit Assembly 29
- Conveyor Belt Tension and Training 30-31
- Conveyot Belt Splicing 32

NOTICE TO DEALER / ASSEMBLER 33
TROUBLE SHOOTING 34-35
PARTS LIST ..... P-1 thru P-14

SERIAL NUMBER

To ensure efficient and prompt service, please furnish us with the model and serial number of your conveyor in all correspondence or other contact. The serial plate is located on the right side of the upper frame of the undercarriage.

RIGHT AND LEFT DESIGNATION

When determining which is the left or right hand side of the unit, it is as if a person were standing at the intake end and looking toward the discharge end.

OPERATOR QUALIFICATIONS

Operation of this Portable Conveyor shall be limited to competent and experienced persons. In addition, anyone who will operate or work around a Portable Conveyor must use good common sense. In order to be qualified, he must also know and meet all other requirements, such as:

1. Some regulations specify that no one under the age of 16 may operate power machinery. This includes Portable Conveyors. It is your responsibility to know what these regulations are in your area or situation.
2. Current OSHA regulations state in part: "At the time of initial assignment and at least annually thereafter, the employer shall instruct every employee in safe operation and servicing of all equipment with which the employee is, or will be involved."*
3. Unqualified persons are to stay out of the work area. See page 9.
4. A person who has not read and understood all operating and safety instructions is not qualified to operate the machine.

***Federal Occupational Safety & Health Standards\ for Agriculture Subpart D, Section 1928.57 (a) (6).**

SIGN OFF SHEET

As a requirement of OSHA, it is necessary for the employer to train the employee in the safe operation and safety procedures with this conveyor. We include this sign off sheet for your convenience and personal record keeping.

DATE	EMPLOYER SIGNATURE	EMPLOYEE SIGNATURE

MACHINE INSPECTION

After delivery of your new conveyor and/or completion of assembly and before each use, inspection of the machine is mandatory. Use the assembly instructions in this manual as a reference to determine that the conveyor is assembled properly. This inspection should include, but not be limited to:

1. Check to see that all guards listed in the assembly instructions are in place, secured and functional.
2. Check all safety signs and replace any that are worn, missing or illegible. The safety signs are listed in the back of this manual. Safety signs may be obtained from your dealer or ordered from the factory.
3. Check undercarriage winch and cable for security and operation. There should be at least three complete wraps of cable around winch drum in full down position. Cable anchor on winch drum must be tight.
4. Are all fasteners tight?
5. Are drive belts properly adjusted? (See Maintenance Section.)
6. Is conveyor belt properly adjusted? (See Maintenance Section.)

Obtain any needed replacement parts from your dealer and install before using the machine.

CONVEYOR FEATURES

Take some time to familarize yourself with the standard and optional features listed below.

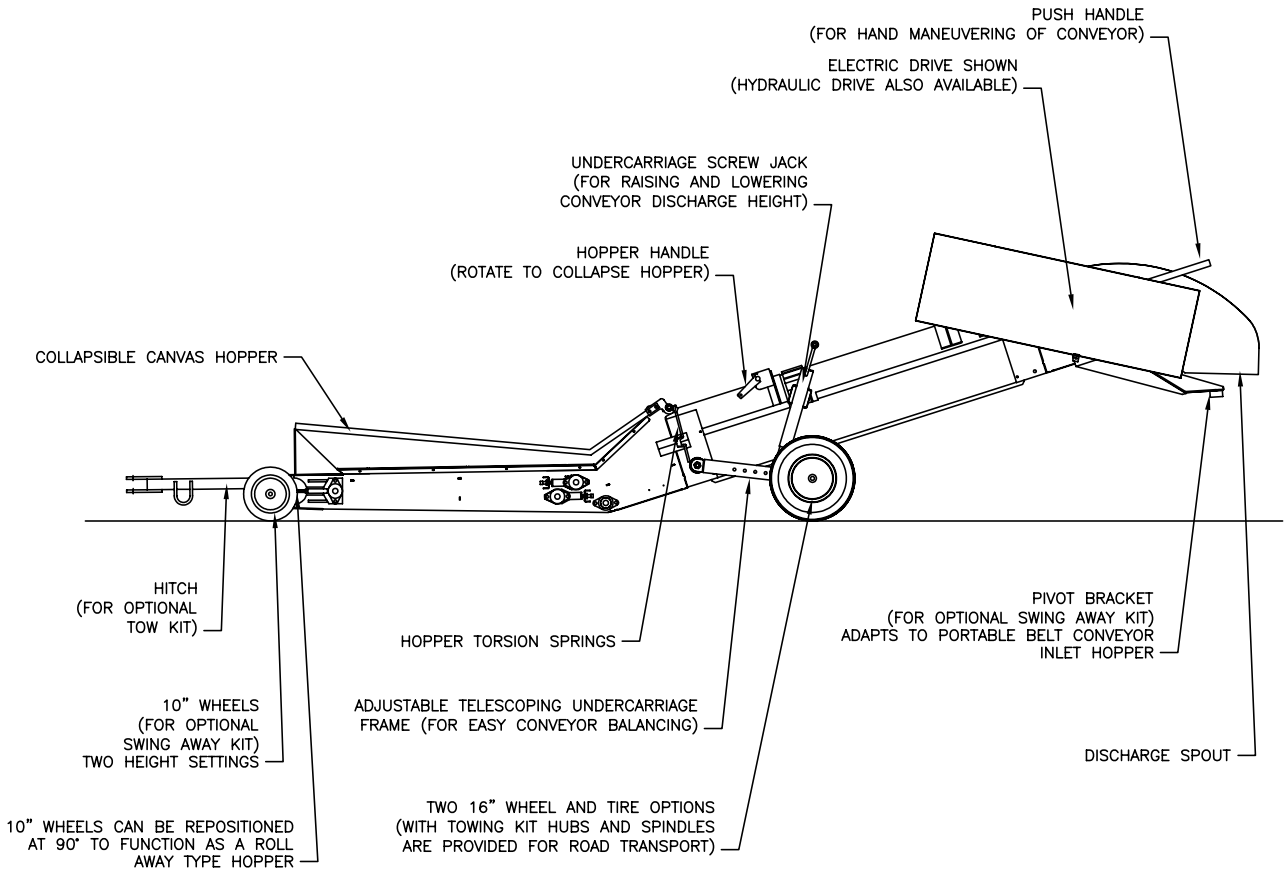

TRANSPORTING THE CONVEYOR
(WITH OPTIONAL TOWING KIT ONLY)

The optional towable undercarriage has spindle and hub type wheel assemblies that are designed for over the road transport of the conveyor. It is recommended that the maximum speed be limited to 40 MPH, however.

NOTE: If the conveyor is equipped with the optional 5' long incline extension, it is **NOT** intended for over the road towing.

Move the conveyor with a tractor to or from the work area. A pick-up truck or other suitable vehicle may be used for transporting the conveyor over greater distances. Comply with your state and local regulations governing marking, towing and maximum width. Observe safe driving and operation practices.

Follow these steps when transporting the conveyor:

1. Always transport your conveyor in the full down position, by completely retracting the undercarriage screw jack.

2. Always attach a safety chain, as specified below.

3. The undercarriage is relatively narrow, so use extreme caution when cornering and when traveling over rough or uneven terrain.

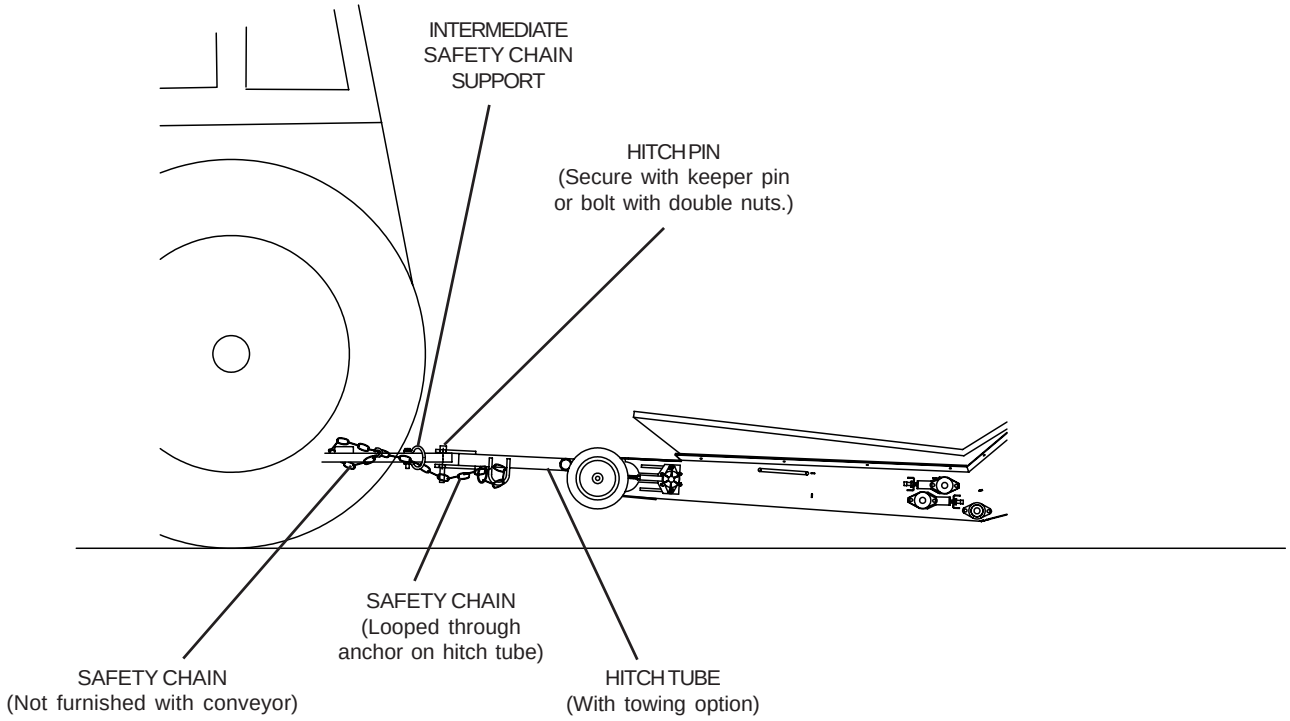

DESIGNATED WORK AREA

Before starting the conveyor, a designated work area should be established around the hopper.

Under no circumstances should persons not involved in the operation be allowed to trespass into the work area.

It shall be the duty of all operators to see that children and/or other persons stay out of the work areas! Trespass into the work area by anyone not involved in the actual operation, or trespass into a hazard area by anyone, shall result in an immediate shut down by the operator.

It shall be the responsibility of all operators to see that the work area has secure footing, is clean and free of all debris, and tools which might cause accidental tripping and/ or falling. It shall also be their responsibility to keep the work area clean and orderly during the operation.

It is essential to inspect your drive before adding power and know how to shut down in an emergency.

During the operation of your conveyor, one person shall be in a position to monitor the operation. Any conveyor when it is new or after it sets idle for a season should go through a “break-in” period. The conveyor should be run at partial capacity until several hundred bushels of grain have been conveyed to polish the inside of the tube. When the tube is polished, the conveyor can be run at full capacity.

During the initial start up and break-in period, the operator shall be aware of any unusual vibrations or noises., that would indicate a need for service or repair.
Keep all safety shields and devices in place.
Keep hands, feet and clothing away from moving parts.
The operator should have a full view of the work area and check that all personnel are clear of designated work area before adding power.

SHUT OFF POWER AND LOCKOUT DRIVE TO ADJUST, SERVICE OR CLEAN.

It is very important that the conveyor belt run in the center of the conveyor when operating. Carefully read through the belt tension and training instructions on pages 30 and 31 before attempting to operate the conveyor.

ELECTRIC MOTOR DRIVE INFORMATION

Always use a motor with required H.P. suggested in the chart below. Use a motor that operates at 1750 RPM. Electric motors and controls shall be installed by a qualified electrician and must meet the standards set by the National Electrical Code and all local and state codes. Reset and Motor Starting Controls may be mounted directly to the conveyor or in a nearby area, but they must be located so that the operators have full view of the entire operation from the control location.

A magnetic starter should be used to protect your motor when starting and stopping. It should stop the motor in case of power interruption, conductor fault, low voltage, circuit interruption, or motor overload. Then the motor must be restarted manually. Some motors have built-in thermal overload protection. If this type motor is used, use only those with manual reset.

Disconnect power before resetting motor overloads.
Make certain electric motors are grounded.

Electric motor is not furnished. The motor pulley is provided for 60 Hz, 1750 RPM drives after 10/31/08. (The motor pulley for 50 Hz, 1450 RPM drive is not provided.) Use the following table for recommended sizes. Using these recommendations will provide a belt speed of approximately 525 FPM.

The conveyor is supplied with a 12" O.D. driven pulley.

If slower belt speeds are desired, a 15" O.D. driven pulley will provide approximately a 420 FPM belt speed.

If faster belt speeds are desired, a 3.5" O.D. motor pulley will provide approximately a 625 FPM belt speed.

Recommended motor size is based on clean, dry shelled corn or wheat. For higher moisture grain (up to 25%) the next larger motor may be used as a maximum.

CHECK THE FOLLOWING BEFORE ADDING POWER:
1. Check that belt guard is in place, secured and functional.

TO START CONVEYING
1. Start electric motor before conveying grain.

TO STOP CONVEYING
1. Let conveyor empty of grain before stopping.
2. Shut off electric motor and lockout.

Conveyor Model	Recommended Electric Motor HP	Motor Frame Size	Recommended Motor Sheave For 60 Hz, 1750 RPM Motor	Recommended Motor Sheave For 50 Hz, 1450 RRM Motor
1015 Transfer	5 HP	184T	2-Groove "B" Section 2.65" Pitch Dia. (3" O.D.)	2-Groove "B" Section 3.2" Pitch Dia. (3.5" O.D.)
1015 Transfer w/ 5' Incline Extension	7-1/2 HP	213T	2-Groove "B" Section 2.65" Pitch Dia. (3" O.D.)	2-Groove "B" Section 3.2" Pitch Dia. (3.5" O.D.)

HYDRAULIC MOTOR DRIVE INFORMATION

IMPORTANT: Use a tractor which has the proper hydraulic capacity, (12 to 14 gallons per minute) with a hydraulic oil pressure of 1000 PSI.

IMPORTANT: Read the hydraulic motor information in the lubrication section on page 11 of this manual.

NOTE: The hydraulic drive is NOT intended for use on the conveyor if equipped with the optional 5' incline extension.

A flow control valve is provided to regulate the hydraulic motor speed. To operate the flow control valve, turn the control to "0" to stop the conveyor belt. Use the settings "1" thru "10" to increase the conveyor belt speed.

The hydraulic control lever on the tractor will operate the motor in either direction, making it possible to run the conveyor belt in the wrong direction. Therefore, make certain the belt is moving from the loading hopper into the conveyor tube.

NOTE ABOUT HYDRAULIC MOTORS AND TRACTOR:

Hydraulic motors, when used properly, can be a very good source of power. Hydraulics, on the other hand, are a sophisticated system and can create problems if not properly installed. Ordinarily, the hydraulic motors can be plugged into the standard outlets on the back of a tractor and be expected to work adequately. Most newer tractors have a hydraulic pump capable of supplying enough oil. Some problems are encountered with built-in restrictors in the stock valves - 1/2" lines supplying tractor outlet - the snap couplers themselves act as restrictors. Speeding up the tractor to overcome any of the above areas will only result in excess heat build-up which could damage the tractor or the motor.

Do not disconnect hydraulic lines while system is under pressure. Because hydraulic systems are highly pressurized, escaping hydraulic oil (even an invisible pinhole leak) can penetrate body tissues and cause serious injury Use a piece of wood or cardboard when looking for leaks. Never use the hands or other parts of the body. When reassembling, make absolutely certain that all connections are tight; If injured by hydraulic oil escaping under pressure, see a doctor immediately. Serious infection or reaction may occur if medical attention is not received at once.

Keep all hydraulic lines away from moving parts. Refer to the rules and regulations applicable to the power source operating your hydraulic drive.

SHUTDOWN

A. NORMAL SHUTDOWN

Make certain that the conveyor is empty before stopping the unit. Before the operator leaves the work area, the power source shall be locked out. (See LOCKOUT).

B. INTERMITTENT OPERATION SHUTDOWN

When a conveyor is stopped and restarted under full load, it may result in damage to the conveyor. Therefore, if intermittent operation is to be carried out, it is advisable to reduce the load level. When kept from absolute filling, conveyor start-up is easier and operation is more efficient.

C. EMERGENCY SHUTDOWN

Should the conveyor be immediately shut down under load, disconnect and lockout the power source. Clear as much grain from hopper and conveyor as you can. Never attempt to start when full. When as much grain as possible has been cleared, reconnect power source and clear conveyor gradually.

NOTE: Starting the unit under load may result in damage to the conveyor. Such damage is considered abuse of the equipment.

LOCKOUT

WARNING: If the operator must leave the work area, or whenever servicing or adjusting, the conveyor must be stopped and the power source turned off. Precaution should be made to prevent anyone from operating the conveyor when the operator is absent from the work area.

HYDRAULIC DRIVE: Remove ignition key or coil wire from power source.

ELECTRIC DRIVE: A main power disconnect switch capable of being locked only in the OFF position shall be provided.

OPERATING CAPACITIES

Capacities of belt conveyors can vary greatly under diverse conditions. Different materials, moisture content, amounts of foreign matter, angle of operation, methods of feeding and speed all play a role in performance of the conveyor. Capacities will be the highest at lower angles of conveyor incline. For instance, an expected capacity of 6000 BPH at 15° conveyor incline may drop to less than 3000 BPH when the conveyor is at a 30° incline. Maximum possible capacity will be less with high moisture grain (above 15%) than with dry grain. Feeding the material into the conveyor so that it is moving in the direction of the belt travel will aid capacity.

LUBRICATION & MAINTENANCE

For economical and efficient operation of your conveyor maintain regular and correct lubrication. Neglect leads to reduced efficiency, excessive wear and needless down time. Use the following schedule for best results.

Keep all safety shields and devices in place. Replace any that are damaged or missing.
Shut off power and lockout drive to adjust, service or clean.

Any parts needing replacement should be replaced with parts of the same type and size. Do not modify or alter any of the conveyor components.

PULLEY & "S" ROLLER BEARINGS

All bearings are fitted with grease zerks and should be lubricated as specified in the maintenance schedule on the following page. Before greasing the bearings, make certain the zerks are free of dirt, otherwise this will be passed into the bearing race. **NOTE: Overgreasing can be as harmful as under greasing, if it forces grease out of the bearing seals.**

IMPORTANT: SET BEARING ECCENTRIC LOCK COLLARS IN DIRECTION OF SHAFT ROTATION AS SHOWN BELOW

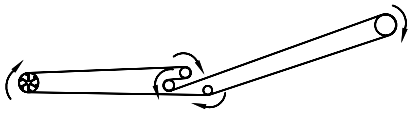

RIGHT SIDE

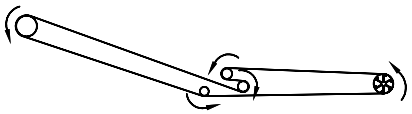

LEFT SIDE

DRIVE BELT ADJUSTMENT (ELECTRIC DRIVE MODELS)

On drives that are powered by belts, the belt tension will need periodic adjustment. Use the adjustment bolt under the motor mount plate.

WHEEL BEARINGS

Towable Undercarriage Axle Spindle Bearing

Tapered roller type bearings are used on the optional towable undercarriage and should be repacked with grease and adjusted annually or as needed, determined by usage. Care must be used in dismantling wheel bearing assemblies. See Fig. 7. First remove the dust cap by prying around the edges. Remove the cotter pin, slotted nut and flat washer. Carefully remove the hub and bearings from the spindle. Inspect all parts for wear or damage and replace with new ones, if necessary.

When reassembling the hub, repack both bearing cones with grease and fill the hub cavity 1/3 full. Place inner bearing assemblies into the hub, and then press seal into hub and carefully reinstall the hub on the spindle. When placing hub on spindle be careful not to damage the lip of the grease seal. Install outer bearing assembly into the hub, and replace flat washer and slotted nut. Then tighten the slotted nut to seal the bearings until the hub binds as you rotate hub. Back off the slotted nut to the next slot and install a new 5/32" x 1-1/4" long cotter pin. Replace dust cap.

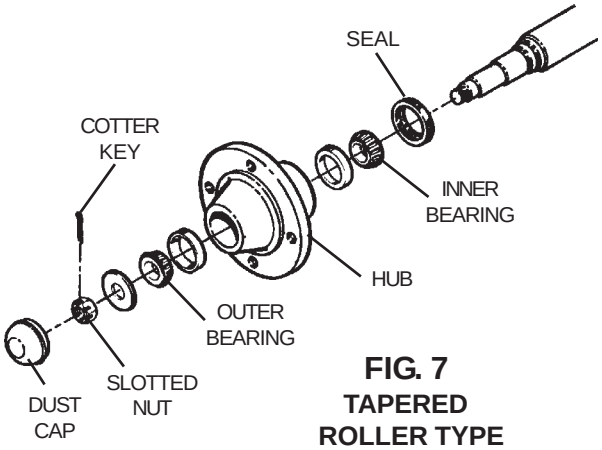

FIG. 7
TAPERED ROLLER TYPE BEARING ASSEMBLY

HYDRAULIC MOTOR

A hydraulic motor is used to power the hydraulic drive type of transfer belt conveyor. Hydraulic motors are built to extremely high standards and should be treated as such. It should be returned to your nearest service center or to the factory if in need of repair. Only trained personnel should repair and test returned motors, so that they meet the highest quality repair and test standards. Upon request, before repairs are made, the owner will be notified of the cost and probable cause of the failure. The only exception to the above is the replacement of the high pressure shaft seal.

Hydraulic motors are designed and manufactured to very strict tolerances and assembled under closely controlled conditions. If properly installed and with a minimum of attention, it will give long trouble-free service.

- Avoid nuisance fluid-leaks. Typical causes are dirty, scratched, bowed or inadequately bolted joints; vibrating, unsupported lengths of flexible and rigid piping. The cure: careful assembly, proper seals, periodic inspection. Only compatible materials (resistant to fluid and temperatures involved) should be used.
- Avoid shock - limit the rate of pressure build-up. Adjust relief valves, avoid chatter, sudden pressure surges and higher than needed working pressures. Pressure and flow are energy - use them efficiently. It is best to let the conveyor completely empty before stopping, so it doesn't restart under load.
- Be aware of temperatures. Use oils that will not be too heavy when cold or too light when hot. Either may affect operation and lubrication. Never exceed 180° oil temperatures or motor damage could occur.
- Include adequate filtration in the system. (10 micron or finer)
- The hydraulic drive motor has a displacement of 6.2 cubic inches per revolution. Exceeding the recommended motor RPM may cause motor damage. At 12 GPM, motor RPM will be approximately 447 RPM. **DO NOT** exceed 14.5 GPM or approximately 537 RPM.

TRANSFER BELT MAINTENANCE SCHEDULE

- Inspect and replace the belt splice every 800,000 bushels or 180 hours.
- Back the adjustment bolts all the way off for the belt during the off season.
- Insert one - two pumps of grease in each of the bearings every 500,000 bushels or 110 hours or once a season, whichever is reached first (too much grease can push out the bearing seals) and after each time the unit is washed down. After the wash down, insert just enough grease to push out the water and let run for 15 minutes.
- Check all the drive belts on the unit and adjust, as needed.
- Examine all of the skirting at least every 1,000,000 bushels or 165 hours or once a season, whichever is reached first.
- If the unit will set outside during the off season, make sure that the discharge hood is installed and cover the inlet hopper section with a tarp or plastic. Keep the tarp or plastic off the ground. This should help keep rodents out of the unit and protect the belts. Store the unit inside out of the weather, if possible. Sunlight is hard on the belts and hoses.
- Keep the inlet section off the ground. This will also help keep rodents out of the unit and protect the belts.
- Before start up, tighten the adjustment bolts on the belt and check for proper alignment on start up.
- Check for proper belt alignment during each operational season.

HYDRAULIC HOSE

Check all the hydraulic fittings and hoses to see if they are tight and not leaking hydraulic oil. Replace any hydraulic hose that may be cut or damaged.

CAUTION: Do not connect or disconnect hydraulic components when there is pressure within the system. Hydraulic systems are highly pressurized. Escaping hydraulic oil, even an invisible pinhole leak, can penetrate body tissues and cause serious injury. Use a piece of wood or cardboard when looking for leaks. Never use the hands or other parts of the body. When reassembling, make absolutely certain that all connections are tight. If injured by hydraulic oil escaping under pressure, see a doctor immediately.

Serious infection or reaction may occur if medical attention is not received at once.

INLET TO DISCHARGE ASSEMBLY

NOTE: Whenever reference is made to right or left side of conveyor, it is determined by standing at the inlet end of the conveyor and looking toward the discharge end.

1. Loosely connect the tube flanges of the inlet and discharge assemblies together with eight (8) 3/8" x 1" long bolts and 3/8" locknuts. Using three of the top flange bolts, mount the pull handle mount bracket. Refer to drawings on pages 19 and P-5 (Item 18).

   If the convyor is equipped with the optional 5' long incline extension, the extension bolts on between the inlet and discharge assemblies. Refer to page P-14.

2. Prop the discharge end of the conveyor up on a saw horse so that the bottom of the inlet housing lays approximately horizontal. Level the inlet and discharge assemblies from side to side using a carpenter's level placed across the top of the frames. When level tighten the flange bolts.

3. Insert cable pull handle through the pivot holes of the handle mount bracket just installed and secure with a 5/32" x 1-1/4" cotter pin. NOTE: The handle can go through the mount either way, depending on if right or left hand operation is desired.

NOTE: All pulleys, bearings and rollers have been pre-assembled at the factory.

CONVEYOR UNDERCARRIAGE ASSEMBLY

NOTE: There are two undercarriage options available for the transfer belt conveyor.

A. The basic undercarriage uses large wheel barrow type tires and wheels with integral axle bearings. This undercarriage is ideal for maneuvering the conveyor around by hand or at very slow speeds, but is not designed for road transport of the conveyor.

B. The towable undercarriage has spindle and hub type wheel assemblies that are designed for over the road transport of the conveyor. It is recommended that the maximum speed be limited to 40 MPH, however, on smooth roads. On rough terrain, the speed must be reduced accordingly or serious damage to the unit can occur.

   NOTE: If the conveyor is equipped with the optional 5' long incline extension, it is **NOT** intended for over the road towing.

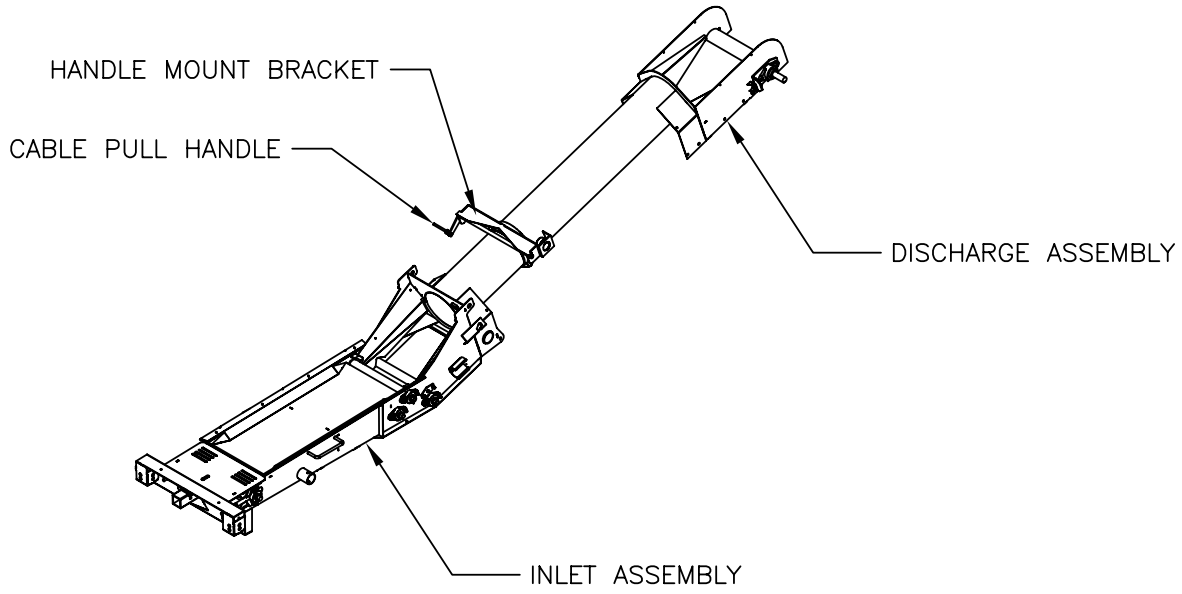

CONVEYOR UNDERCARRIAGE ASSEMBLY

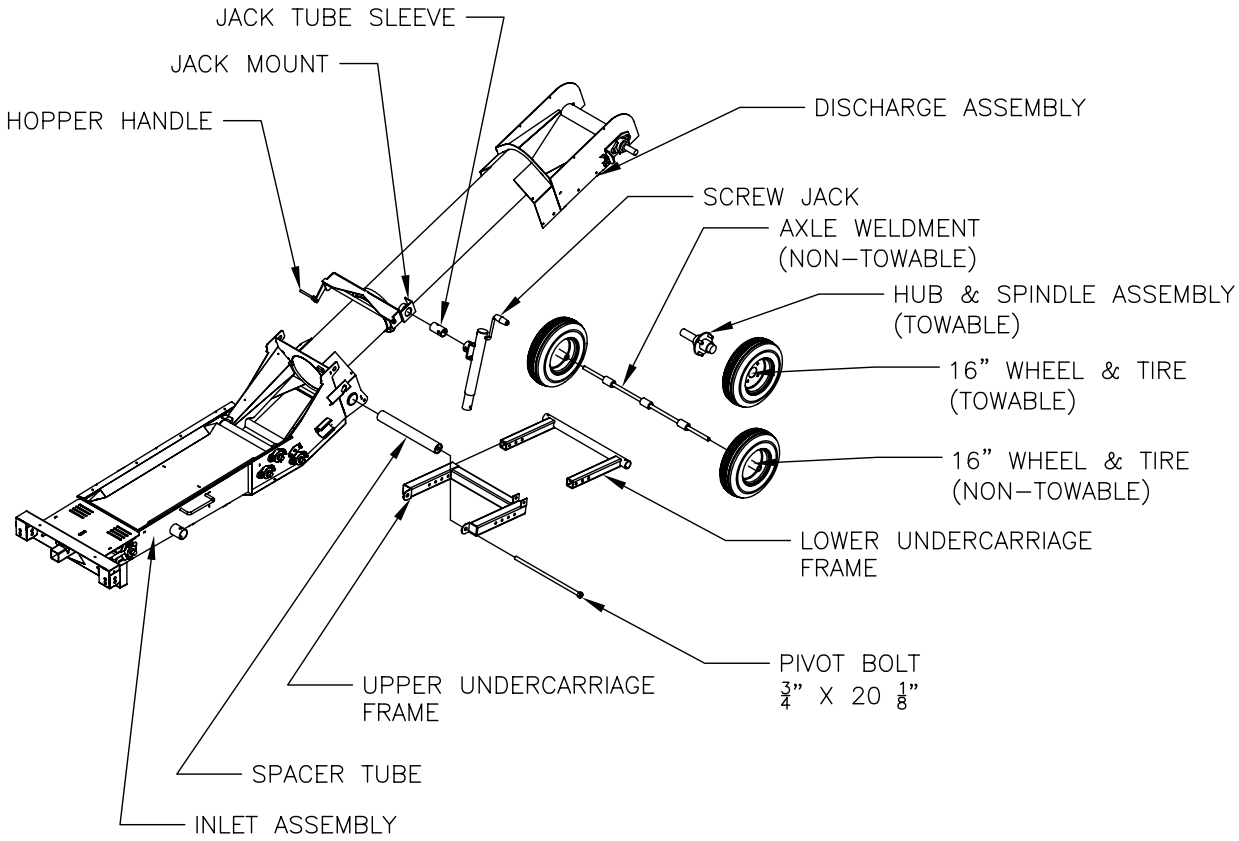

If not specified otherwise, the instructions pertain to both styles of undercarriage.

1. Slide the spacer tube weldment through th 2-7/8" diameter tube that is welded between the sides of the inlet housing.

2. Align the holes in the end angles of the upper undercarriage frame with the holes in the spacer tube and insert the 20 1/8" long 3/4" bolt through the holes. Install a 3/4" locknut on the bolt and tighten.

NOTE: The jack mounting tabs on the upper undercarriage should be on the right hand side of the conveyor and on top of the undercarriage arm. The owner's manual holder bracket should be on the left hand side of the conveyor.

3. Insert the jack tube sleeve through the 2" hole in the jack mount and into the 2 3/8" O.D. tube of the jack mount, which are welded to the right side of the conveyor tube.

NOTE: The 11/16" diameter hole in the jack tube sleeve should be to the outside away from the conveyor.

4. Insert a 1/4" x 3" long cotter pin through the 5/16" hole in the jack tube sleeve to secure it to the jack mount band.

5. Slide the mounting tube that is welded to the side of the screw jack over the jack tube sleeve. Align the hole in the jack tube sleeve with the horizontal hole in the jack tube and insert the jack pin and secure with the keeper.

CONVEYOR UNDERCARRIAGE ASSEMBLY - CONT.

6. Secure the hole through the bottom tube of the screw jack to the jack mounting tabs on the undercarriage frame with a 1/2" x 3 1/4" long hex head bolt and 1/2" locknut. Insert bolt so that the nut is toward the outside of the conveyor.

7. Insert the 2" square tubes of the lower undercarriage frame into the 2 1/2" square tubes of the upper undercarriage frame. The distance the tubes are inserted depends on the conveyor balance required and will vary depending on whether the unit has an electric or hydraulic drive. For hydraulic drive units, the tubes will have to be inserted further than on electric drive units.

A recommended starting point is noted below. (See Detail).

Hydraulic drive: In upper undercarriage frame, use the third hole in the tube (from the axle tube). In the lower undercarriage frame, use the middle hole (from the axle tube).

Electric drive: In upper underccarriage frame, use the first hole in the tube (from the axle tube). In the lower undercarriage frame, use the middle hole (from the axle tube).

8. Once you have aligned the correct undercarriage frame holes, insert a 1/2" x 3-1/2" long washer head pin through each undercarriage arm and secure the pins in place using two 3/32" x 2" long hair pin. The balance of the conveyor should be checked when the conveyor has been totally assembled. If the balance needs to be changed, pull the pins and slide the lower undercarriage frame in or out of the uppercarriage frame, as required. When balanced as desired, reinstall the pins and hair pins.

9. For basic undercarriage, continue here. For towable undercarriage, skip to step number 12.

   Slide the axle and bushing assembly through the axle tube on the lower undercarriage frame. There should be an equal amount protruding from each end of the tube (6 3/4" each end).

10. Slide a 3/4" flat washer over each end of the axle and push them up against the ends of the axle tube on the lower undercarriage frame.

11. Slide a 16" wheel and tire assembly over each end of the axle. Secure in place with 3/16" x 2" long cotter pin in each end of the axle.

12. For towable undercarriage, slide the 1 5/8" diameter end of the spindle and hub assembly into the ends of the axle tube of the lower undercarriage frame. Align the holes in the spindles with those in the axle tube and bolt in place with two 3/8" x 2 1/2" long hex head bolts and 3/8" locknuts.

13. Mount wheel and tire assembly to each hub using four lug nuts per wheel.

14. If the optional towable undercarriage has been installed, refer to the assembly instruction for the towing kit on page 29 for additional assembly required.

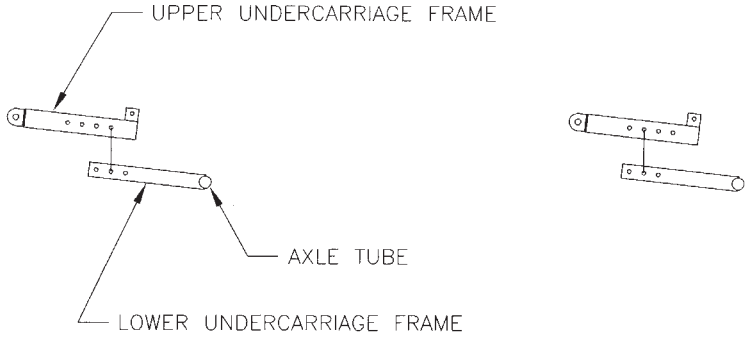

ELECTRIC DRIVE

HYDRAULIC DRIVE

CONVEYOR BELT

REFER TO ASSEMBLY DRAWING ON PAGE 16.

NOTE: Whenever reference is made to right or left side of conveyor, it is determined by standing at the inlet end of the conveyor and looking toward the discharge end.

1. Move the roll of conveyor belting to the inlet end of the conveyor. Put a round bar through the wooden hub inside the belt and set each end of the rod on a saw horse or other support so that the roll of belting is free to rotate. Make sure the roll is arranged so that as it is unrolled and the end pulled through the conveyor tube, that the side of the belt with crescent shaped cleats (rough side) will be up and the smooth side will be down against the conveyor tube. Also, the crescent cleats should be cupped away from the inlet end of the conveyor.

   NOTE: For the continuous clevron rubber belt (not shown), the direction of the belt is not critical.

2. Remove the nylon covered connecting pin from the exposed splice end of the belt roll.

   NOTE: The two retaining washers on the pin can be discarded.

3. Pull the end of the belt out onto the flat loading surface of the inlet frame. Wrap the end of the belt over and around the top 2 1/4" diameter “S” roller then over and around the lower “S” roller and pull the belt end up into the transition area just before it enters the 10" diameter conveyor tube.

4. Run a piece of straight wire at least 36" long through the loops of the exposed splice end of the belt. Tie the wire ends together to form an attachment loop for pulling the belt through the conveyor tube.

5. Run a rope through the belt conveyor tube and tie it to the wire loop created in Step 4 above.

   NOTE: The rope should be longer than the assembled conveyor tube length.

6. Pull the belt through the conveyor tube from inlet end to discharge end. Assure belt arranged as specified in Step 1 above.

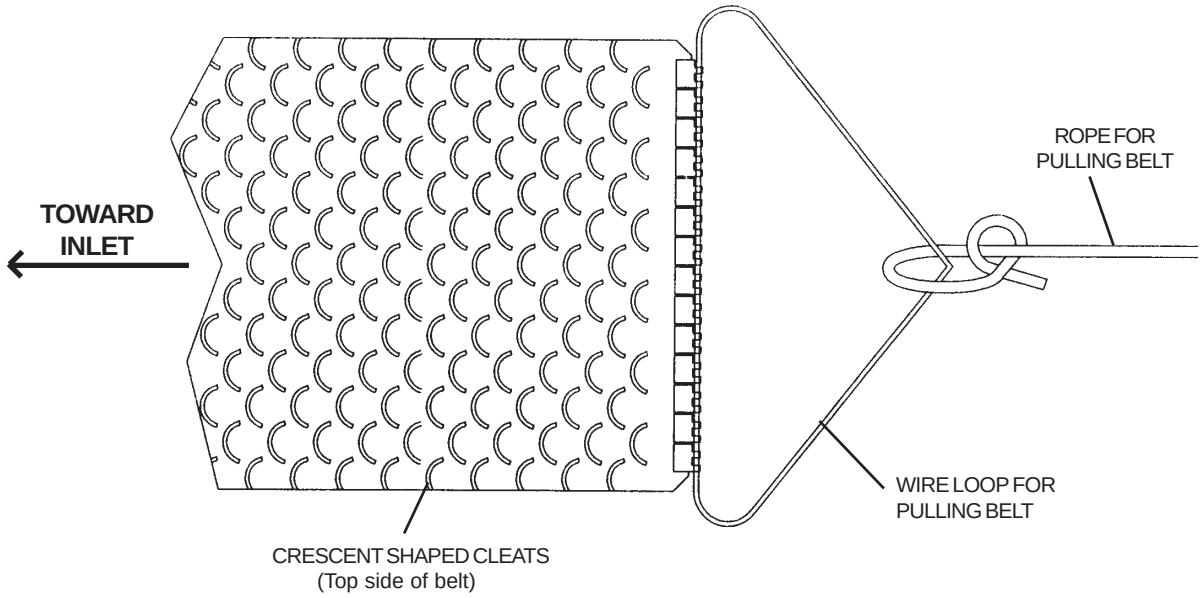

CONVEYOR BELT - CONT.

7. Route the pull rope around the head pulley, over the top side of the 2" return roller that is just under and behind the head pulley and under the 2" return roller at the bottom of the inlet frame assembly. Using the pull rope, pull the end of the belt along this path.

8. Continue to pull the end of the belt under the inlet frame until it reaches the tail pulley.

9. Remove the pull rope and wire pull loop from the end of the belt splice.

10. Insert the end of the belt under the tail pulley and wrap it around the tail pulley. Now pull the end over the top of the tail pulley and out onto the flat loading surface of the inlet frame. Make sure the belt is underneath the bar across the end of the inlet hopper.

11. Inspect the path of the belt once again to make certain it matches the following diagram.

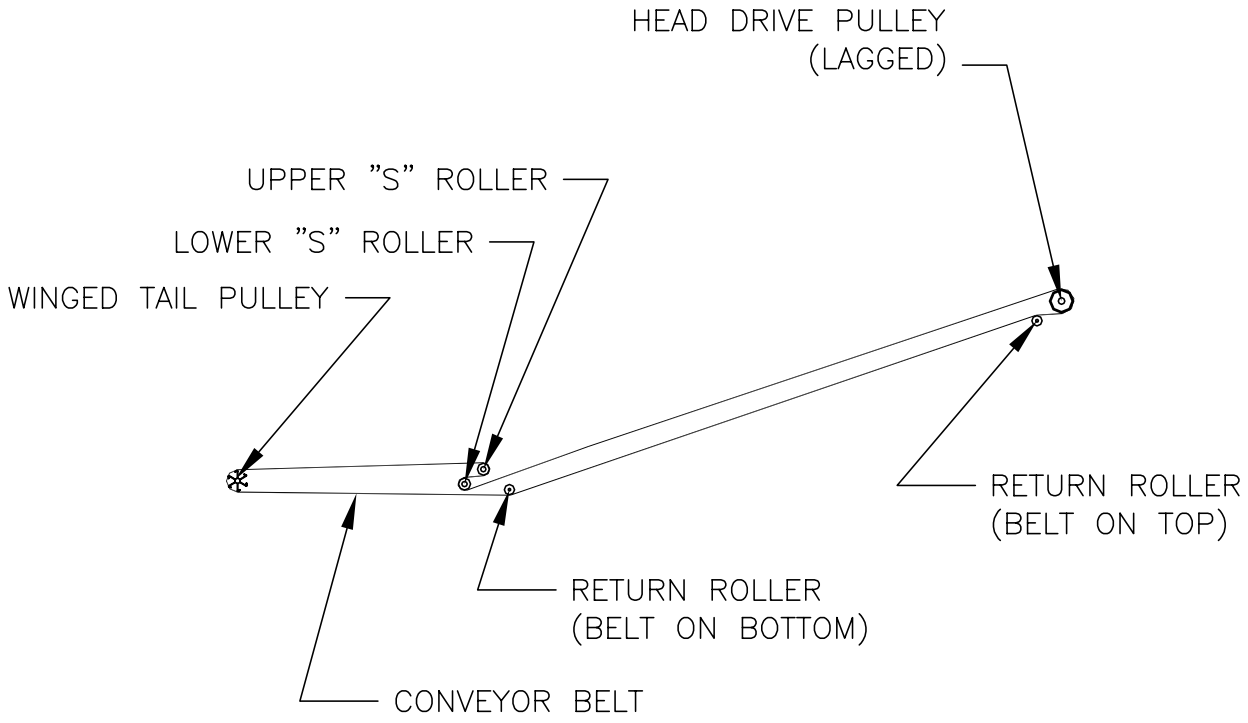

CONVEYOR BELT - CONT.

12. Pull the two ends of the belt together so that the splice bars interlock and insert the nylon covered pin (removed from the belt in Step 2) through the splice. Make certain the belt edges are aligned with each other. If not, the splice was probably connected improperly. It may be necessary to provide additional slack in the belt to get the ends to come together. If so, turn the take-up bolts to move the take-up pulley closer to the drive pulley. NOTE: Although two pin retaining washers may have been supplied with the splice pin, experience has shown that it is bets to just discard them. The hinge pin will seat into the hinge after a short period of operation. To assure the pin stays in place until seated, using a punch, smash one of the lace hinge loops located in the center of the splice. This leaves the ends of the pin free to work inside the splice as if flexes going in and out of the conveyor tube. The splice should be monitored during the first few hours of conveyor operation to assure that the pin hasn't started to work out of the splice.

13. Tighten the conveyor belt by adjusting the take-up bolts on the tail pulley bearings. For now, the take-up adjustment should be equal on both the right and left sides.

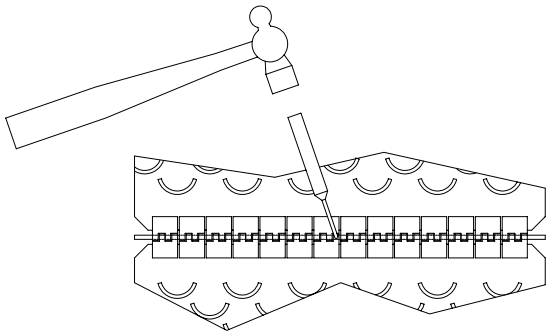

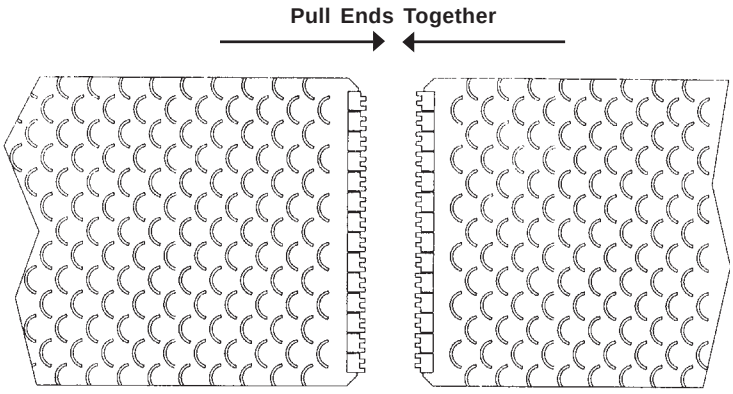

CONNECTED BELT

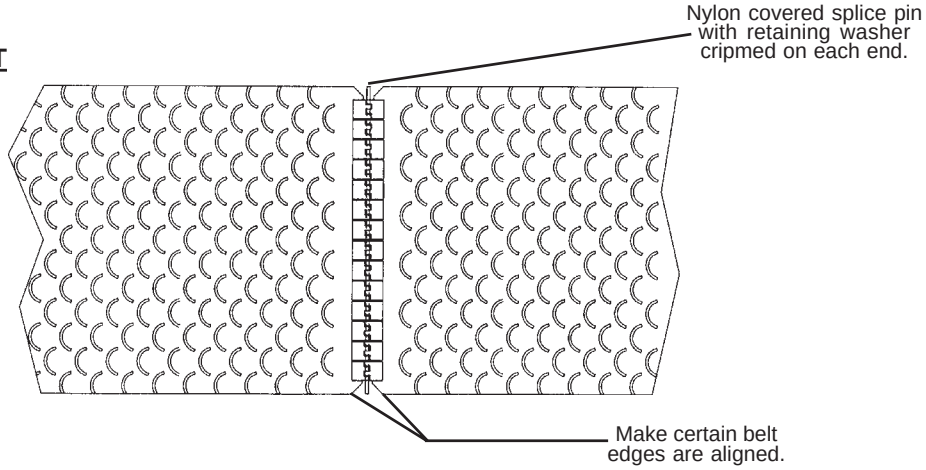

INLET HOPPER ASSEMBLY

NOTE: Whenever reference is made to right or left side of conveyor, it is determined by standing at the inlet end of the conveyor and looking toward the discharge end. Refer to drawing on page 19 during assembly.

1. Insert the spring pivot pipe through 15/16" diameter holes in the side panels of the inlet housing assembly.
2. Slide the right side hopper spring over the tube of the right side spring anchor and slide over end of spring pivot pipe. Install a 5/32" x 1-1/4" long cotter pin in the hole in the end of the spring pivot pipe.
3. Repeat Step 2 for the left side hopper spring and spring anchor.
4. Lay canvas hopper out on a flat surface with the inside surface up. NOTE: One side of the canvas hopper has pockets sewn in for the support bars and the tarp retaining bars. This is the outside of the canvas hopper.
5. Insert a left and right side hopper support bar into the top sewn pocket on each side of the canvas hopper. The top pocket is the one with the largest opening and does not have bolt holes.
6. Insert the end hopper support bar into the top sewn pocket on the end of the canvas hopper.
7. Fasten the ends of the side hopper support bars to the ends of the end hopper support bar using two 1/4" x 3/4" long hex head capscrews with nylon locknuts.
8. Fasten the other end of each side hopper support bar to the spring anchors with two 3/8" x 1-1/4" long hex head capscrews and nylon locknuts each. The hopper support bars mount on the outside of each spring bracket.
9. Hook the straight portion of each hopper spring into the notch in the hopper spring retainer angle welded to each side of the inlet housing assembly. NOTE: Hooked end of each spring should be wrapped around tab of spring anchor.
10. Slide the lower tarp retaining straps into the bottom sewn pockets of the canvas hopper. There are two long and two short side retaining straps and one end retaining strap.
11. Lay the two lower skirt rubber sides and one skirt rubber end inside the inlet hopper. NOTE: The end skirt rubber piece should lay on top of the side skirt rubber pieces.
12. Pull the canvas hopper down toward the inlet housing assembly until the holes in the bottom of the canvas align with the holes in the inlet hopper side and end panels. NOTE: The skirt rubber sides and end needed to be sandwiched in between the canvas hopper and the metal sides of the inlet housing assembly. Fasten the canvas hopper, side retaining straps and side rubber skirts to the metal sides of the inlet housing assembly with twelve 1/4" x 1-1/4" long (grade 2) elevator bolts with lockwashers and non-lock nuts. The bolt heads should be on the inside of the hopper. Fasten the canvas hopper, end retaining strap and end rubber skirt to the metal end bar of the inlet housing with two 1/4" x 3/4" long serrated head bolts with flatwashers and 1/4" spring u-nuts. Bolt heads should be on the inside of the hopper.
13. Assemble three cable guide rollers, as shown below using a 3/8" x 1-3/4" long bolt, two 7/16" flat washers and a 3/8" nylon locknut on each.
14. Secure the inlet cover skirt rubber to the transition panels of the inlet hopper, using two 1/4" x 1" long self tapping screws.

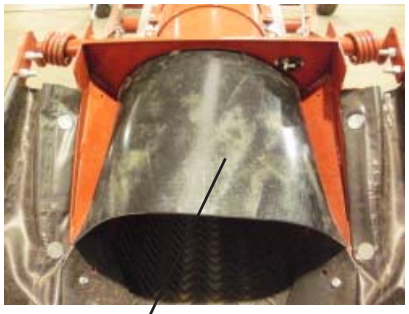

Inlet Cover
Skirt Rubber

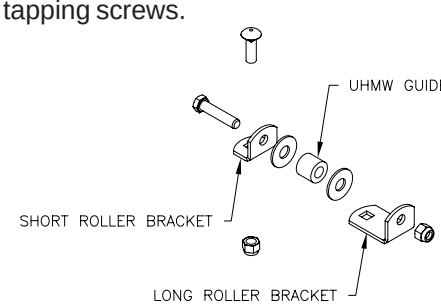

1/4" x 1" long
Self-Tapping Screws

INLET HOPPER ASSEMBLY - CONT.

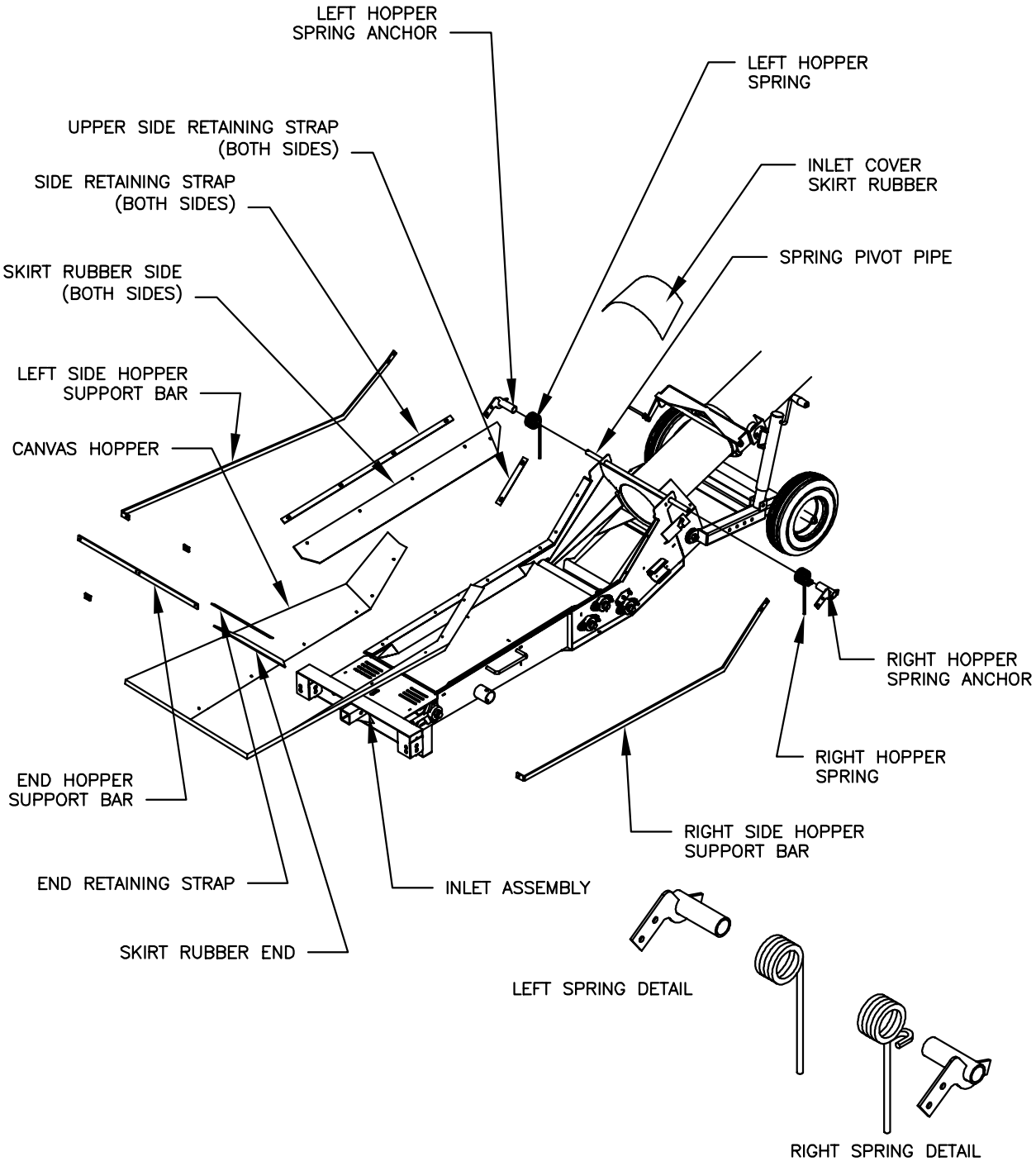

INLET HOPPER ASSEMBLY - CONT.

14. Install cable guide rollers at three locations. See Figures 2 and 3 photos below. Use 3/8" x 1" long carriage bolts and nylon locknuts.
15. Attach one end of a 3/16" x 12' long cable to the hopper end bar using two clamp bars and two 1/4" x 1" long bolts and nylon locknuts. See Fig. 5 photo. Use a punch or similar tool to punch holes through the canvas hopper to match those in the hopper end bar. Wrap the cable up and over the end bar, so it is captured with a clamp bar on both sides of the hopper end bar.
16. Route the 3/16" x 12' cable down through the slot in the tail pulley cover and around the three cable guide rollers, as shown in Fig. 2, 3 and 4 photos.
17. Install a cable thimble between the two flat washers on the pull handle and wrap the end of the 3/16" cable around the thimble and secure the cable end with a 3/16" cable clamp. With the handle rotated to the disengaged position, adjust the cable to take out the slack and tighten the cable clamp.

FIG. 3

FIG. 4

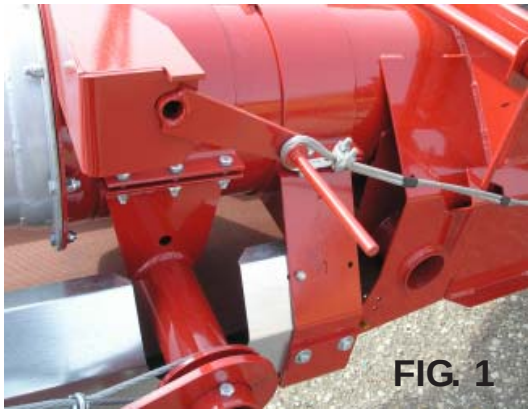
FIG. 1

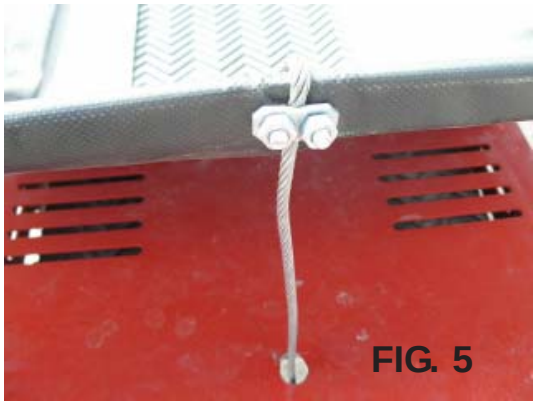
FIG. 5

FIG. 2

FIG. 6

DISCHARGE SPOUT AND PUSH HANDLE

1. Slide the plastic discharge spout over the end of the discharge housing until the two 5/16" diameter holes in each side of the spout are aligned with the two 7/32" diameter holes in each side of the discharge housing. Also, slide the side bars of the push handle over the outside of the plastic spout and align its holes with those in the spout and discharge housing. Secure spout and handle to discharge housing with four 1/4" x 1" long self tapping hex head metal screws.

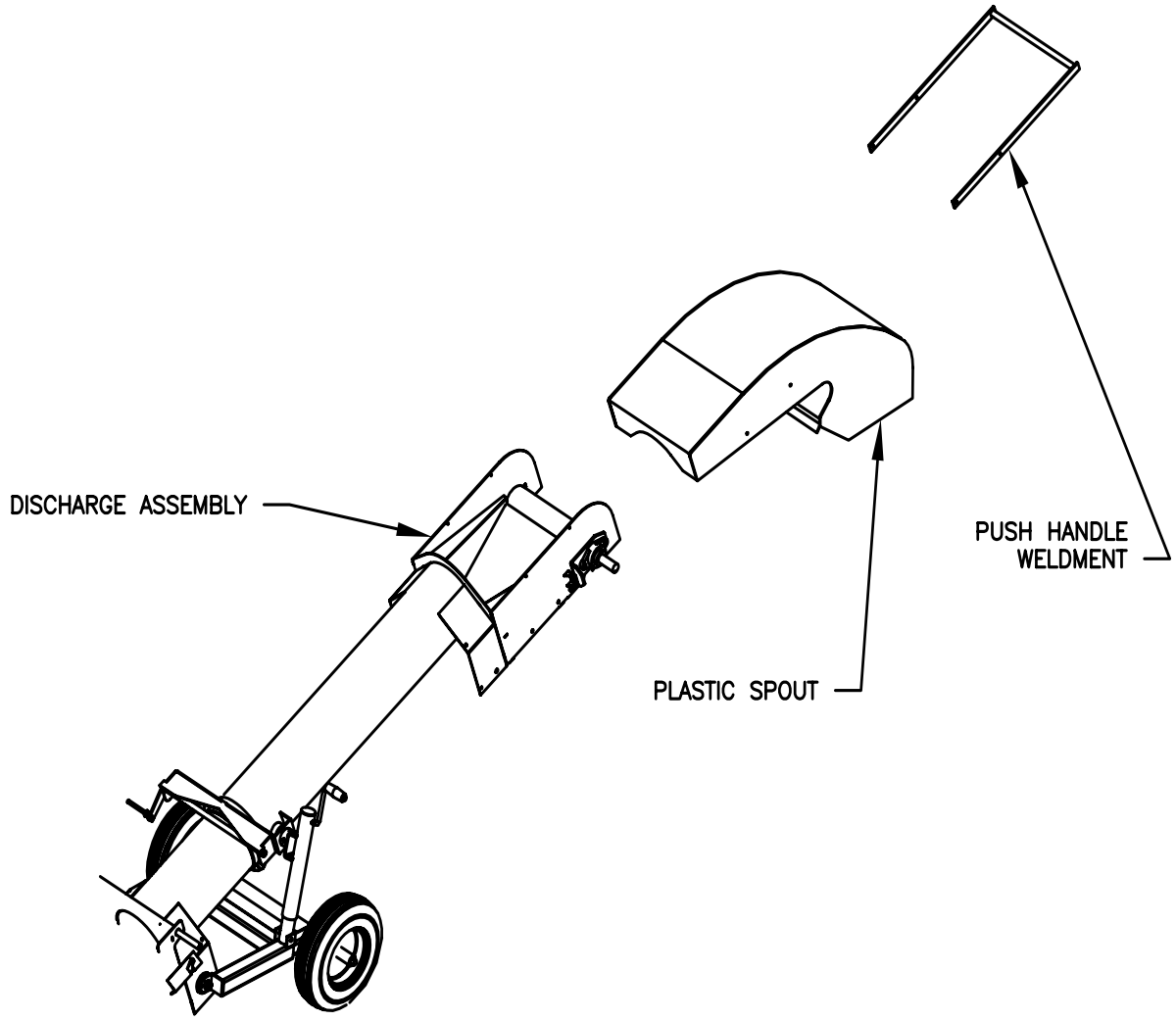

ELECTRIC DRIVE ASSEMBLY

NOTE: Whenever reference is made to right or left side of conveyor, it is determined by standing at the inlet end of the conveyor and looking toward the discharge end.

1. Set motor mount support on top of the conveyor tube and slide up the tube as far as it will go. Secure the support to the tube with two 10" x 4" wide half bands and eight 3/8" x 1 1/2" long hex head bolts and locknuts. The motor mount support plate will be offset toward the right side of the conveyor.

2. Thread the adjusting bolt down through the nut in the top of the motor mount support until it only extends two to three inches above the top of the support (final adjustment will be done after installing motor and belts).

3. Set the motor mount plate down over the motor mount support and align the pivot shaft holes in each. Install the pivot shaft through the holes and install a 3/16" x 1 1/2" long cotter pin in each end to secure it in place.

4. Install the rear belt guard bracket to the motor mount support with two 5/16" x 3/4" long hex head bolts with lock nuts. Mount bracket to plate of motor mount support that is closest to the discharge end. The bracket should be positioned so that the guard mounting holes are toward the discharge end also.

5. Install the front belt guard bracket to the side of the discharge housing. To do this, slightly loosen the 1/4" x 1" long metal screws that secure the plastic spout and push handle to the right side of the discharge housing. Slide the slotted edge of the bracket down behind the push handle bar so that is sandwiched between the spout and the handle bar. Retighten the metal screws.

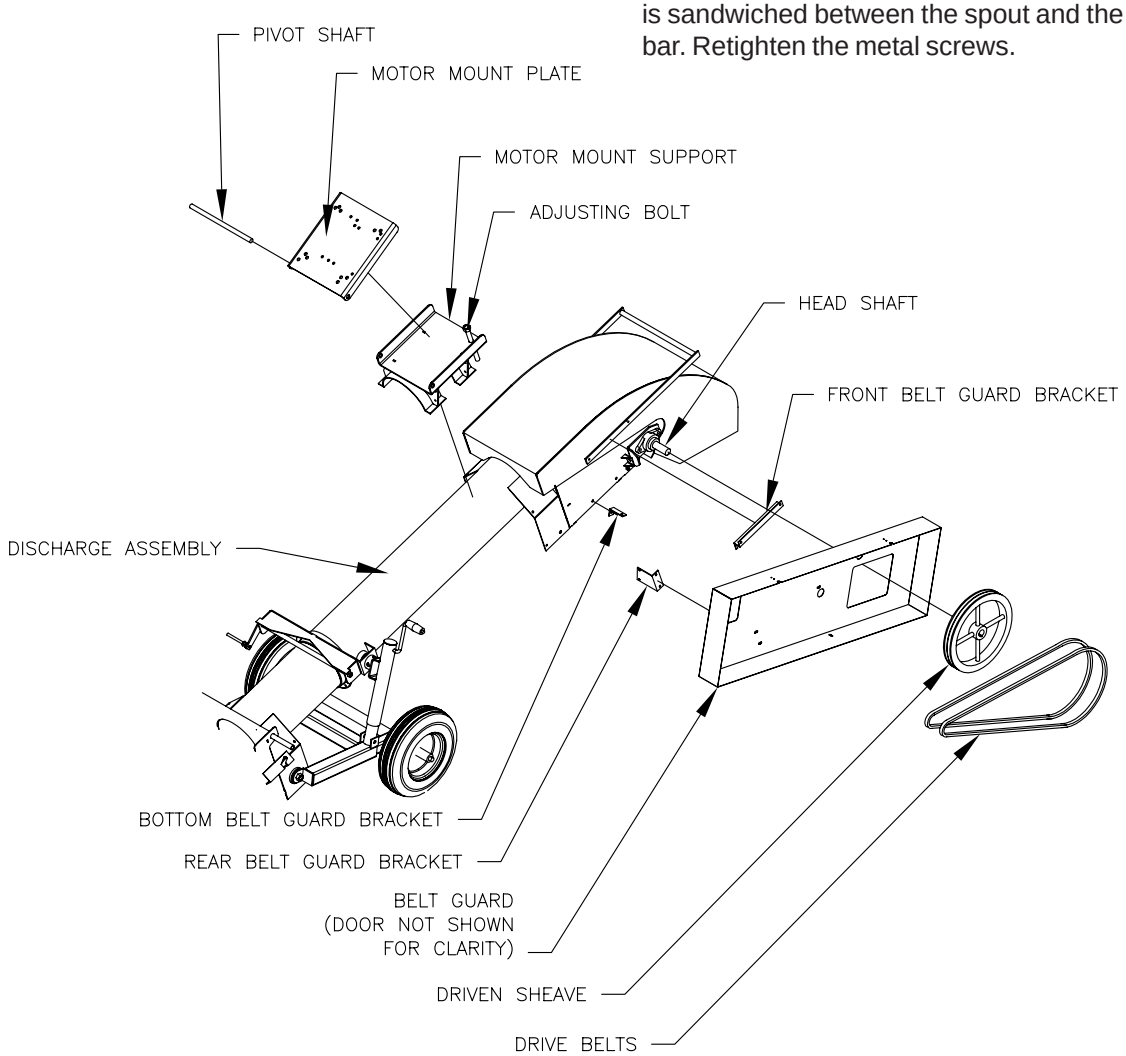

ELECTRIC DRIVE ASSEMBLY - CONT.

6. Install the bottom belt guard bracket to one of the 13/32" diameter holes located near the bottom edge of the right side panel on the discharge housing. NOTE: There are two holes there. Use the hole farthest from the discharge end. Use a 3/8" x 1" long hex head bolt and locknut.

7. Install the belt guard weldment to the three brackets just installed using five 5/16" x 3/4" long hex head bolts with locknuts and flat washers. The guard goes on with the hinges toward the bottom.

8. Install a 1/4" x 3" long square key in the keyway of the head shaft.

9. Slide the 12" outside diameter (nominal) driven sheave onto the end of the head shaft making sure the keyway is aligned with the key in the shaft. Leave setscrew in sheave loose until motor sheave has been installed and both sheaves have been aligned.

10. Install a 5 HP, 1750 RPM, electric motor onto the motor mount plate. NOTE: Motor is not furnished. See motor mount plate detail for proper placement of motor. NOTE: On conveyors equipped with the optional 5' long incline extension, a 7-1/2 HP, 1750 RPM motor is recommended.

11. Install the appropriate motor sheave on the motor shaft. NOTE: Motor sheave is furnished after 10/31/08. IMPORTANT: Use the proper size motor sheave as specified in operating procedures section on page 7 of this manual.

12. Align the motor sheave with the driven sheave by placing a straight edge across the edges of the sheaves. When aligned, tighten the setscrews to hold sheaves firmly on the shafts.

13. Install drive belts and tighten them by adjusting the threaded adjusting bolt up against the bottom of the motor mount place. Once belts are tensioned properly, install a 3/4" hex nut onto the threaded adjusting bolt and secure it tightly against the bottom of the motor mount support.

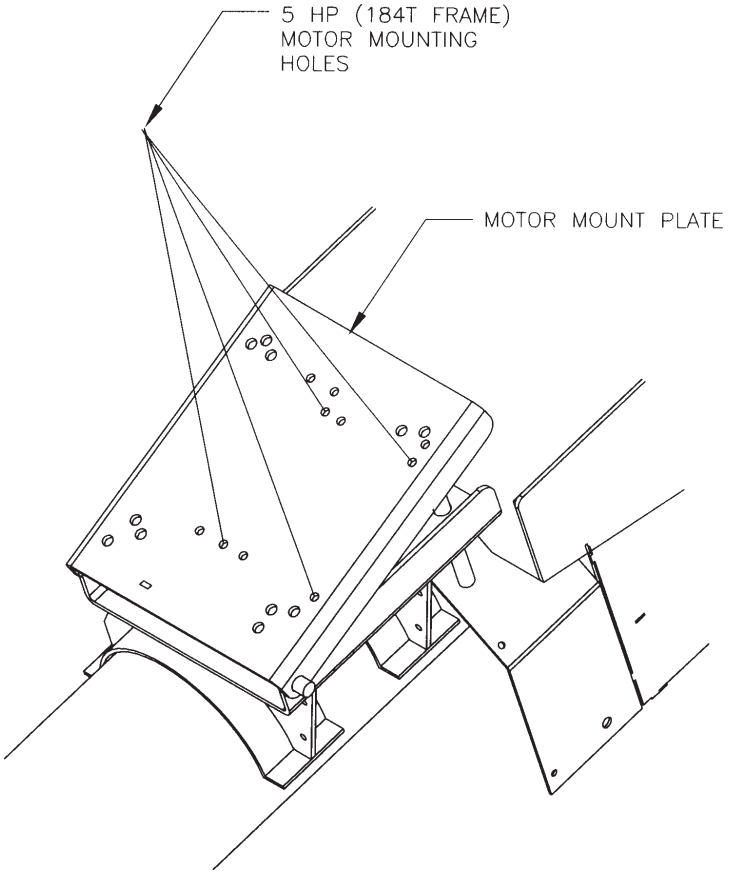

HYDRAULIC DRIVE ASSEMBLY

NOTE: Whenever reference is made to right or left side of conveyor, it is determined by standing at the inlet end of the conveyor and looking toward the discharge end.

NOTE: On hydraulic drive units, the head shaft bearing and bearing push plate on right hand side of the conveyor must be removed before mounting the hydraulic motor mount weldment. Discard the push plate and mount the bearing spacer plate between the discharge housing side panel and the motor mount weldment. This allows room for the discharge spout to fit between the motor mount and the housing side panel. Use two 1/2" x 2-1/2" carriage bolts and lock nuts. Make sure the bearing is on the side of the mount.

1. Install a 1/4" x 1-1/4" long key into keyway in right hand end of the conveyor head shaft.
2. Install the flex coupling half with 1-1/4" bore onto the end of the head shaft.
3. Slide the hydraulic motor shaft through the mounting hole of the mounting weldment and install the flex coupling half with 1" bore. Make certain key is installed.
4. Bolt the hydraulic motor to the hydraulic motor mount with four 3/8" x 3/4" long hex head bolts and lockwashers. NOTE: Position motor so oil ports are toward the top.
5. Install coupler chain around the two coupler halves and connect ends.
6. Install the two coupling guard panels to the motor mount using two 1/4" flat washers and four 1/4"“ lock washers and nuts.
7. Install a 1/2" 90° hydraulic elbow fitting into one end of the hydraulic tee fitting. (See piping detail on page 25.) NOTE: Use teflon tape (not provided) on all threaded connections.
8. Screw the 1/2" male pipe threads of the hydraulic tee fitting into the exhaust (EX) port of the flow control valve. (The fitting must be installed in the valve before the valve is mounted.)
9. Screw the 1/2" male pipe threads of another 90° hydraulic elbow fitting into the controlled flow (CF)“ port of the flow control valve.
10. Bolt the flow control valve mounting bracket to the side of the discharge housing, using two 3/8" x 1-1/2" bolts and lock nuts. NOTE: If there is a swing-away attachment, this bolts on the outside of the pivot bracket weldment. (See page 27.)
11. Bolt the flow control valve to the two center holes in the flow control valve mounting bracket with two 1/4" x 3" long hex head bolts with flat washers and locknuts.

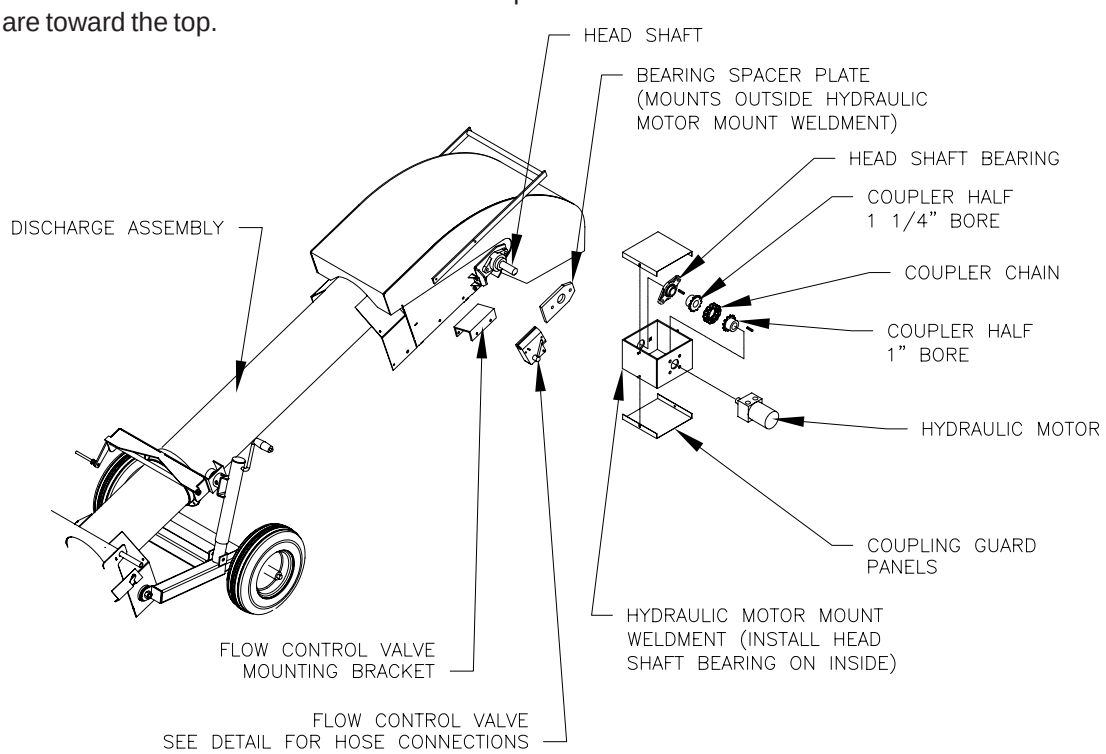

HYDRAULIC DRIVE ASSEMBLY - CONT.

12. Connect the 7/8" - 14 o-ring end of the 34" long hydraulic hose to the front port (toward discharge end) of the hydraulic motor. IMPORTANT: The front port must be connected so that motor rotation direction will be correct for proper belt travel.

13. Connect the other 1/2" male pipe swivel end of the 34" long hydraulic hose to the 90° elbow fitting installed in the controlled flow port of the flow control valve.

14. Connect the 7/8" - 14 o-ring end of the 24" long hydraulic hose to the rear port of the hydraulic motor.

15. Connect the other end of the 24" long hydraulic hose to the top end of the hydraulic tee fitting installed in step 8 on page 24.

16. Install another 1/2" 90° hydraulic elbow fitting into the inlet (IN) port at the bottom of the flow control valve.

17. Connect the two 12 foot long hydraulic hoses to the 90° elbow fittings installed in steps 7 and16 above.

18. Connect the other end of the two 12 foot long hydraulic hose to the appropriate tractor fittings (not furnished) and connect to the tractor hydraulic system.

19. When the hydraulic system is energized, make certain the hydraulic motor is turning the correct direction to achieve the correct belt travel. If the direction is not correct, recheck for proper hose connection to the motor ports. Reference step number 12 above.

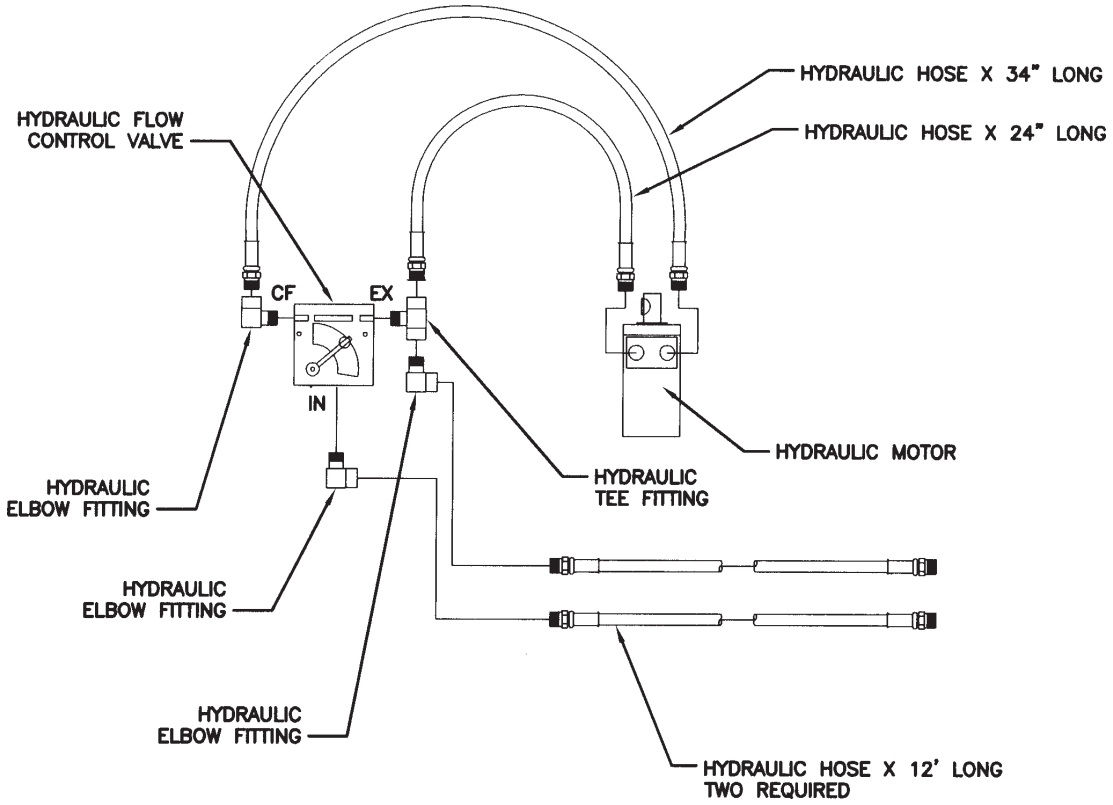

WIND GUARD ASSEMBLY

1. Connect the wind guard panel with the cut-out notch for jack mount to the right side of the conveyor with four 1/4" x 3/4" long hex head bolts with flat washers, lockwashers and non-lock nuts. The panel should set on the inside of the gusset panels that are welded to the inlet and discharge housing side panels.

   NOTE: It may be necessary to slightly extend the undercarriage jack to get the undercarriage to clear the bottom of the wind guard panels.

2. Repeat step 1 for the other wind guard panel on the left side of the conveyor.

3. Connect the bottom flanges of the wind guard panel together using two 1/4" x 3/4" long hex head bolts. Use two flat washers, one lockwasher and one non-lock nut on each bolt.

   NOTE: On conveyors equipped with the optional 5' long incline extension, there is an additional set of wind guards, splice plates and return roller to install. Refer to page P-14.

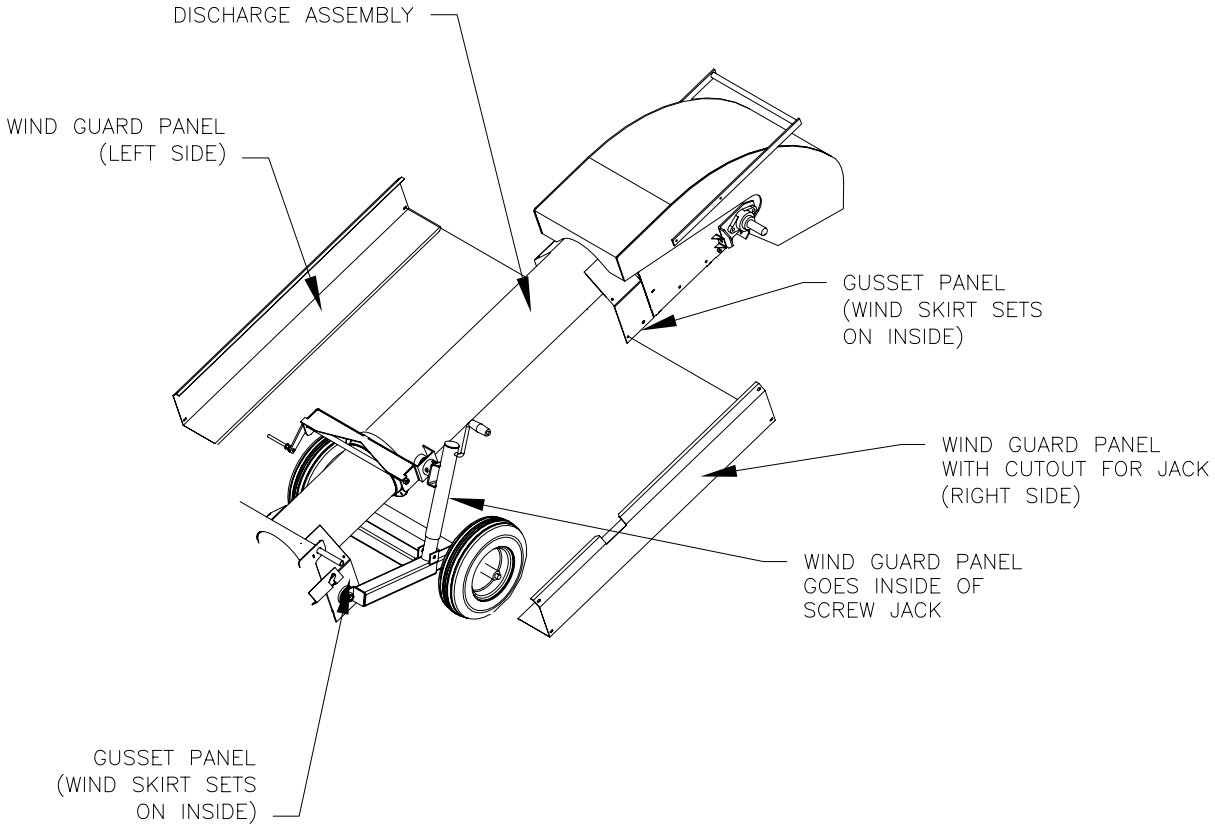

SWING-AWAY KIT ASSEMBLY (OPTIONAL)

1. Insert a 5/8" diameter by 8 1/8" long wheel axle through the hub of each 10" wheel.
2. Slide an axle spacer tube over the end of each wheel axle.
3. Insert the wheel axles through the top set of 11/16" diameter holes in the side of the wheel mount, so wheels are positioned at 90° to the center of the conveyor. (NOTE: Wheels can also be mounted parallel to conveyor center line if you prefer to roll the conveyor and not use it as a swing-away.) Secure the axles in place by inserting a 3/32" x 2" long hair pin through the hole in the end of each axle.) NOTE: If greater ground clearance is desired, the axles can be inserted through the bottom set of 11/16" diameter holes in the wheel mount.
4. Connect the swing away pivot bracket weldment to the four 13/32" diameter holes in the bottom of the discharge housing side panels. The pivot bracket will fit over the outside of the side panels. Secure in place with four 3/8" x 1 1/4" long hex head bolts with locknuts. NOTE: If the conveyor has an electric drive, the bottom belt guard bracket needs to be disconnected from the side panel and then re-bolted with one of the pivot bracket mounting bolts.

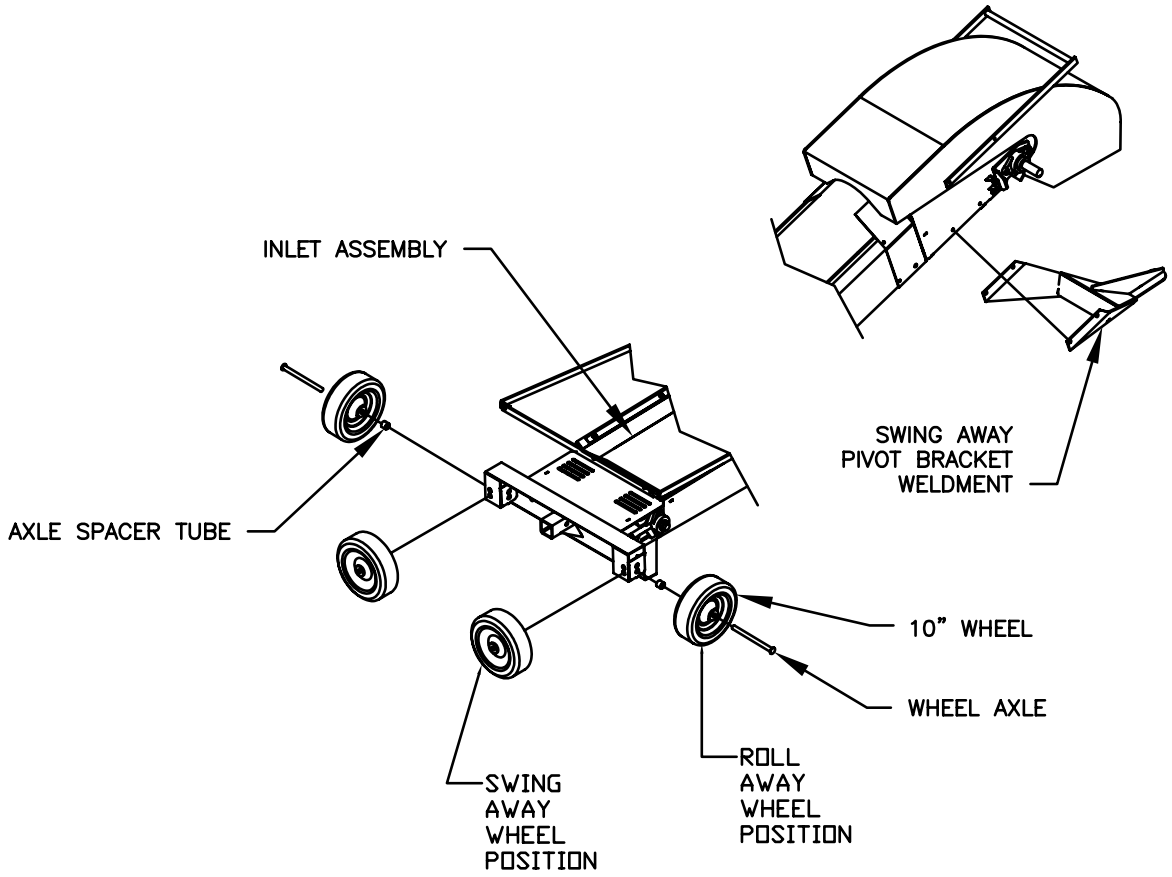

SWING-AWAY KIT ASSEMBLY (OPTIONAL) - CONT.

6. Install the hopper pivot bracket into the inlet hopper of the portable belt conveyor. To do this, loosen the bottom two 1/4" elevator bolts on each side of the hopper. These are the bolts which secure the canvas hopper to the conveyor inlet side panels. Next, slide the slotted bars of the pivot bracket between the bolts and the hopper and re-tighten the bolts. NOTE: The assembly shown is for attaching to a single belt conveyor inlet hopper. The procedure is similar if attaching to a squeeze belt or portable grain pump.

7. Bolt the hitch ball to the hopper pivot bracket installed in step 6 above. Use two 3/4" flat washers under the pivot bracket mount plate so the nut will tighten on the hitch ball threads. A 3/4" nut is provided with the hitch ball.

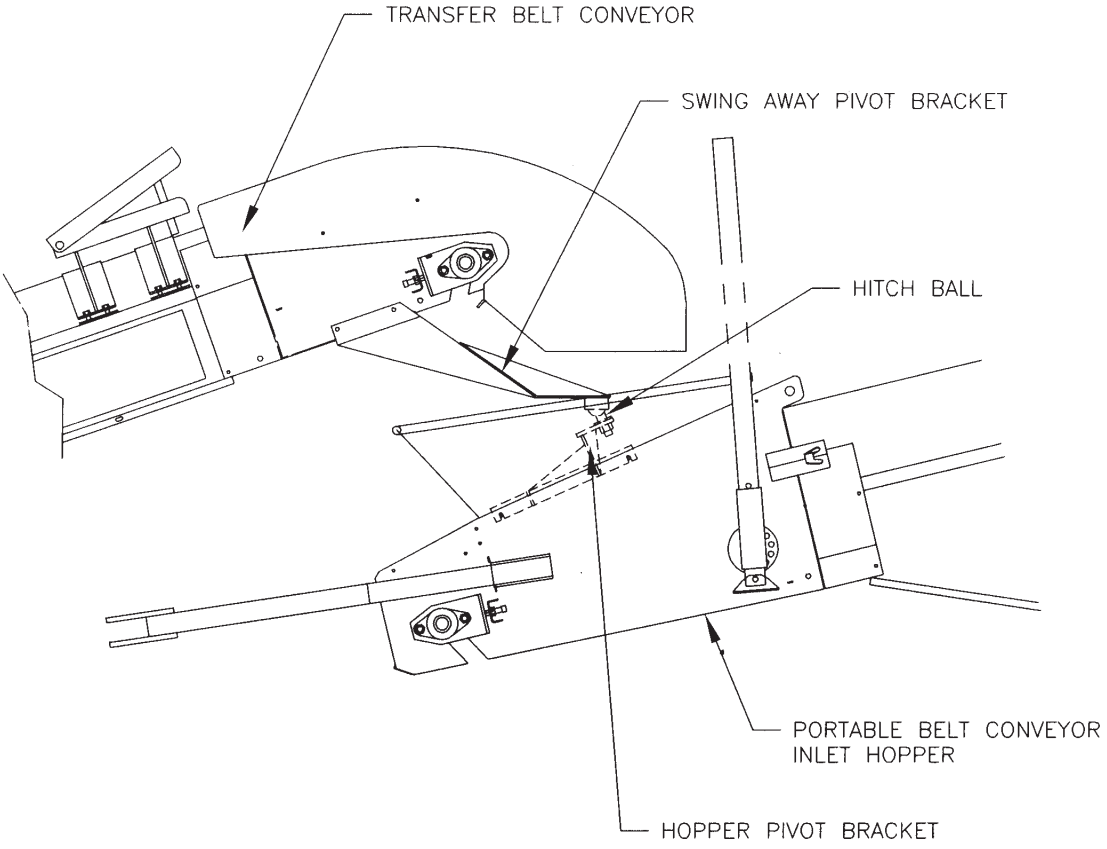

TOWING KIT ASSEMBLY (OPTIONAL)

NOTE: For undercarriage assembly, refer to conveyor undercarriage section of assembly instructions, steps 1 thru 14 on pages 13 & 14.

1. Slide the 2" square tube of the hitch tube weldment into the 2-1/2" square tube on the hitch mount and secure in place with a 1/2" x 3-1/8" long pin and 3/32" x 2" long hair pin clip.

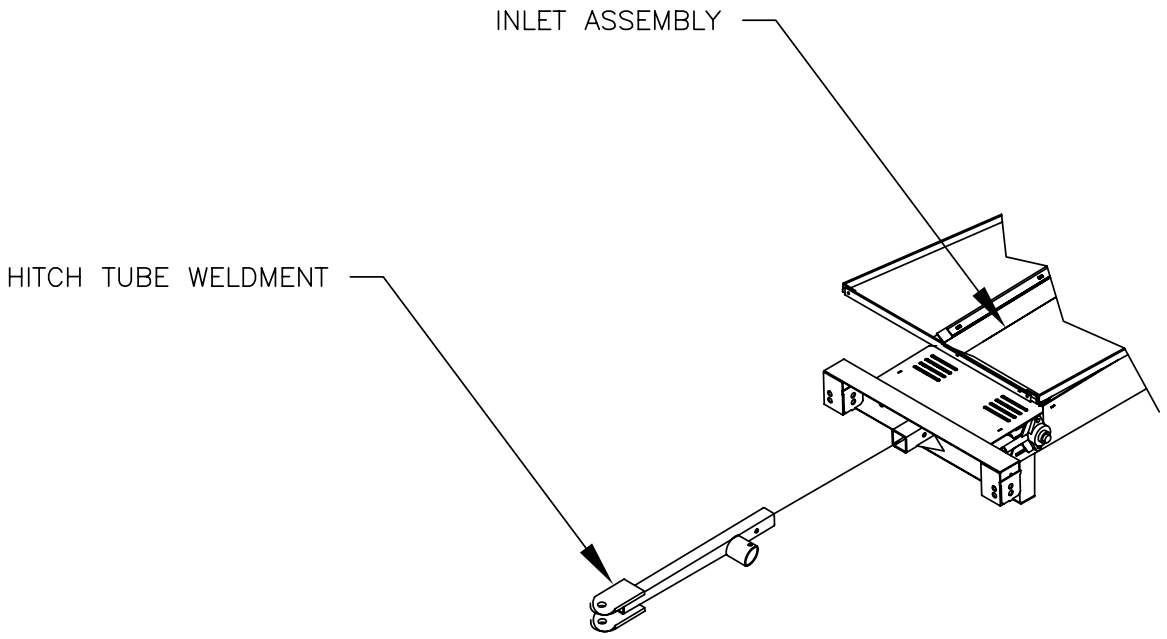

CONVEYOR BELT TENSION AND TRAINING

NOTE: For additonal information, you can refer to the instructional video on our web page at www.hutchinson-mayrath.com. Then select video manuals and Transfer Belt.

IMPORTANT: If the conveyor belt is installed correctly and trained properly, it will run straight and true. Training is the process of adjusting pulleys and rollers to get the belt to track down the center of the conveyor If the belt is not properly trained, it may work its way off the end of a pulley and cause damage to the belt.

IMPORTANT: Belt tracking during the first few minutes of operation is critical. It is a good idea to run the belt at slow speeds (hydraulic models) or by stopping and starting (electric models) to prevent belt damage if the belt mistracks rapidly. Once the belt appears to be tracking using this procedure increase the speed until it is running at operating conditions. Make sure the belt is tracking properly before attempting to convey material. Check the belt frequently during the first 10 hours of operation. After 10 hours, the belt is normally seated and will need less frequent checking.

1. For initial operation, all rotating parts (head pulley, “S” rollers, tail pulley and return belt rollers) must be at a 90° angle to the direction of belt travel and should be level.

2. Slight adjustment of pulleys may be required to keep the belt centered on them. As a general rule, the belt will track toward the loose side. Therefore, if the belt runs to one side of the pulley, apply more tension to this end of the pulley. This is done by loosening the bearing bolts on the shaft end that is to be moved and moving the bearing with the adjustment bolt. Small movements (such as 1/16" to 1/8") are probably all that will be required. NOTE: Only the right hand end of the “S” rollers are movable.

IMPORTANT: If there is too much tension on the conveyor belt, it will be more difficult to train the belt and may shorten the life of the belt.

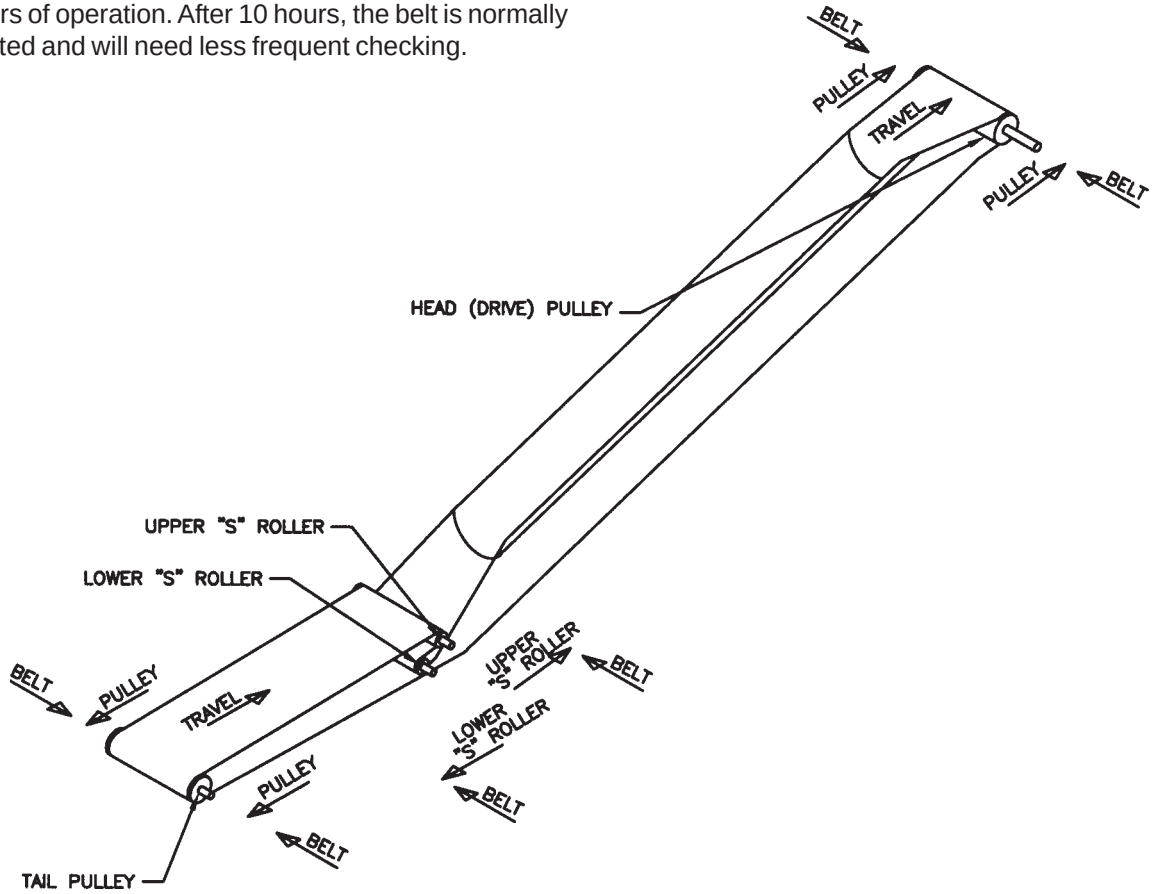

CONVEYOR BELT
TENSION AND TRAINING - CONT.

3. It is best to leave the head (drive) pulley at 90° to the belt travel and make training adjustments with the other pulleys, if possible. The arrows in the diagram on page 30 show probable direction of belt movement for various movements of the head and tail pulleys. Also, notice belt movement vs. “S” roller movement. The belt tracking can be monitored by looking through the slotted cover over the tail pulley and by looking through the discharge opening of the spout. The belt can also be monitored at the point where it enters the incline tube. If it is tracking off to one side, that edge of the belt will be higher where it enters the tube.

4. The belt tension is adjusted by tightening or loosening the take-up bolts, which are attached to the tail pulley bearing plates. The bolts should be adjusted simultaneously the same amount to keep the pulley located the same relative to the belt. If slip occurs under load, additional belt tension should be applied by adjusting the take-up bolts enough to prevent slip from occurring under load and during belt start-up. **It is very likely that one side of the take-up will have to be tensioned more than the other side to achieve proper belt tracking.**

5. If the edge of the belt tracks completely off one side of a pulley, it will be necessary to loosen the take-up adjusting bolts enough to remove all tension from the belt so that is can be manually slid back onto the center of the pulley. It is a good idea to note the location of the take-up bearings before loosening so that they can be returned to their original position after moving the belt. Before restarting the conveyor, make the appropriate adjustments as recommended in Steps 2 & 3 to correct the tracking problem. It may take several attempts to correct the tracking.

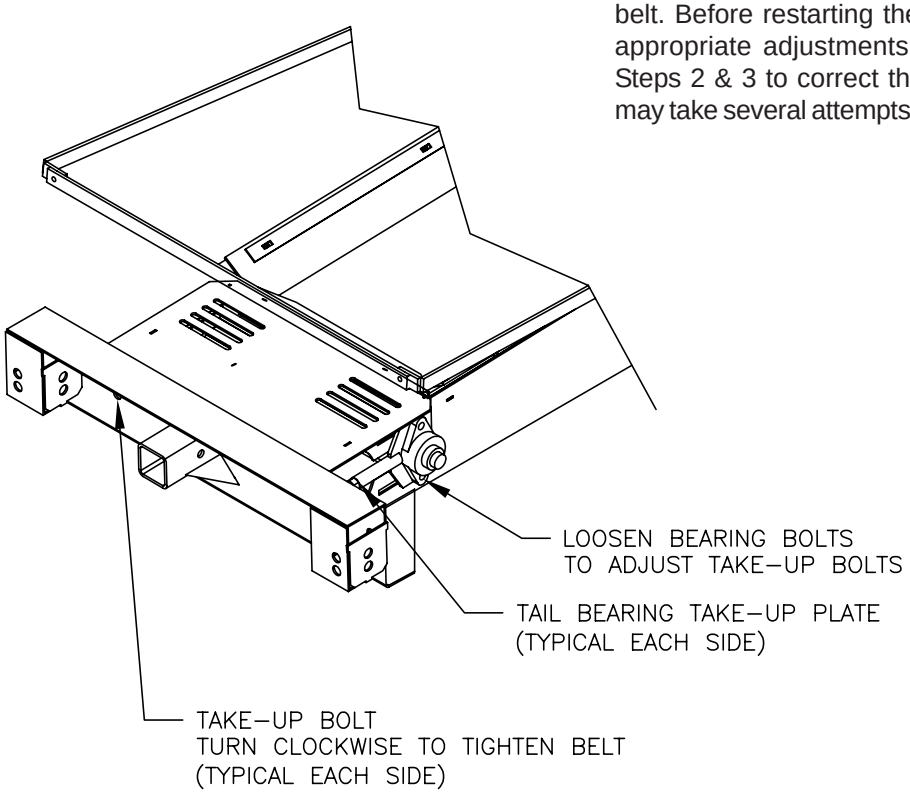

CONVEYOR BELT SPLICING

IMPORTANT: If the conveyor belt becomes damaged for some reason, it may be possible to splice in a section of replacement belt. However, if the damage has occurred along a considerable length of the belt, it may be better to replace the damaged belt with an entire new belt. Splicing the belt does require a special tool for installing the splice connectors to the belt ends. Check to see if your dealer has this tool. Replacement belting and splice kits are listed in the parts section of this manual.

1. The manufacturer of the belt splice provides detailed instructions with the splice kits, so refer to those instructions.

   Also refer to the belt splice video on our web page at www.hutchinson-mayrath.com. Select video manuals and belt splice video.

2. The most critical step in installing the belt splice will be to square the belt ends to be spliced. Squaring the belt ends requires only a few minutes and offers real paybacks in extending your belt splice life. A splice that is applied on a belt that is properly squared will have the tension evenly distributed across the splice. Properly squared splices are essential to good belt training. Following these steps will help ensure that your belt is properly squared.

A. Prior to any work on the conveyor, make certain that the power has been turned off and the belt is “locked out”.

B. Mark the actual center points on the belt width at intervals of about 3 feet for a distance back from the intended splice area of 15 to 20 feet.

C. Using a steel rule or chalk line, mark the average center line though the points measured from Step B.

D. Using a carpenter’s square, draw a line perpendicular to your average center line across the belt width.

E. Cut your belt on this line using a sharp knife.

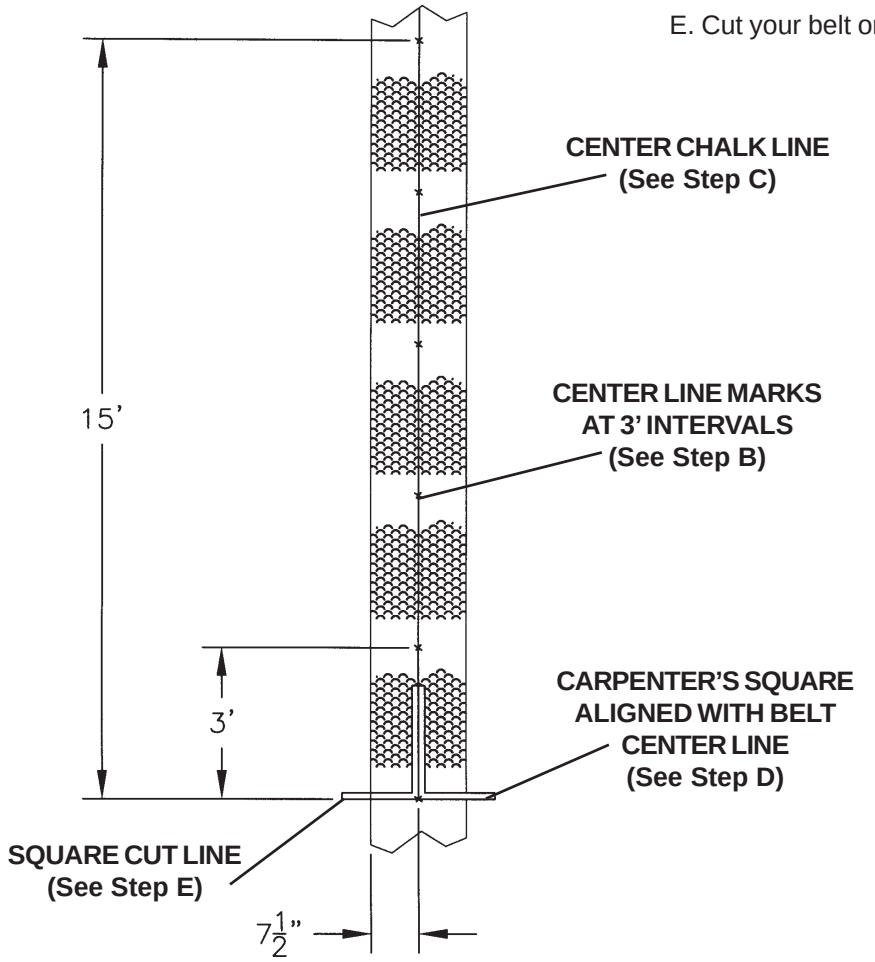

TO DEALER/ASSEMBLER NOTICE

The assembly of the conveyor is complete if all the applicable assembly steps in this manual have been followed.

Before delivery to the owner, it is a good practice to check the following.

A. Be sure all safety shields and devices are installed properly.

B. Check all safety decals to see if they are clean and readable. If any are missing, damaged, painted over, etc. replace them. See pages P-1 & P-2 for safety sign location. Decals may be obtained from your dealer, distributor or ordered from the factory.

C. Check all bolts and fasteners to see they are tightened and secured properly.

D. Check that the Operator's Manual container (with Operator's Manual inside) is installed in its holder on the side of the conveyor undercarriage frame.

Deliver this Assembly and Operator's Manual to the owner, along with the conveyor.

TO THE OWNER

Use the assembly instructions in this manual as a reference to determine that the conveyor is assembled properly.

Make certain that the maintenance schedule on page 11 is read and followed.

TROUBLE SHOOTING

PROBLEM/CAUSE	For Solutions Refer to Answer #					
A. Belt runs off at tail pulley.	7	1	11			
B. Belt runs to one side for long distance or entire length of conveyor.	5	1	2			
C. Particular section of belt runs to one side at all points on conveyor.	3	4				
D. Conveyor belt runs to one side at given point on structure.	1	2	16			
E. Belt runs true when empty, crooked when loaded.	5					
F. Belt slips.	12	11				
G. Belt slips on starting	12	11				
H. Grooving, gouging or stripping of top belt cover.	18					
I. Severe pulley cover wear.	6	7	8			
J. Belt covers harden or crack.	10	13				
K. Belt cover swells in spots or streaks.	9					
L. Excessive belt edge wear, broken edges.	5	7	15	4	17	14
M. Short breaks in carcass parallel to belt edge, star breaks in carcass.	8					
N. Belt ply separation.	10					
O. Belt cupping-old belt (was OK when new).	9	10				
P. Low conveyor capacity.	19	20	6	21	7	12
Q. Pulley drags or does not turn.	22					

CONVEYOR SYSTEM PROBLEMS/CAUSES AND THEIR SOLUTIONS

1. Idlers or pulleys out of square with center line of belt: Readjust idlers in affected area.
2. Conveyor frame or structure crooked: Straighten in affected area.
3. Belt not joined squarely: Remove affected splice and resplice.
4. Bowed belt: For new belt this condition should disappear during break-in; in rare instances belt must be straightened or replaced: Check storage and handling of belt rolls.
5. Off-center loading or poor loading: Load on center of belt; discharge material in direction of belt travel at or near belt speed.
6. Slippage on drive pulley: Increase tension through screw take-up.
7. Material spillage and build-up: Improve loading and transfer conditions, improve maintenance.
8. Material trapped between belt and pulley.
9. Spilled oil or grease: Improve Housekeeping.
10. Heat or chemical damage: Use belt designed for specific condition.
11. Screw take-up tension too light.
12. Insufficient traction between belt and pulley: Adjust tension.
13. Improper storage or handling.
14. Belt improperly spliced.
15. Belt hitting conveyor structure.
16. Structure not level: Level structure in affected area.
17. Belt misalignment: See training recommendations.
18. Sharp edges of objects caught in inlet.
19. Steep conveyor incline: Capacity at 30° incline will be less than half the capacity at 15° incline.
20. Incorrect belt speed. Design capacity is at approximately 600 FPM belt speed. See hydraulic or electric drive section of manual.
21. Loose electric motor drive belts.
22. Frozen bearings. Lubricate or replace.

SAFETY SIGNS AND DECALS

REF. NO.	PART NO.	QTY.	DESCRIPTION	SIZE
1	1002301	1	CAUTION - GENERAL STATEMENTS 1-8	4 3/4" x 8"
2	1005324	1	DANGER - “STOP”, IF ANY GUARDS, SHIELD . .	4" x 6"
3	1001974	1	WARNING - ESCAPING HYDRAULIC OIL	4" x 7 1/2"

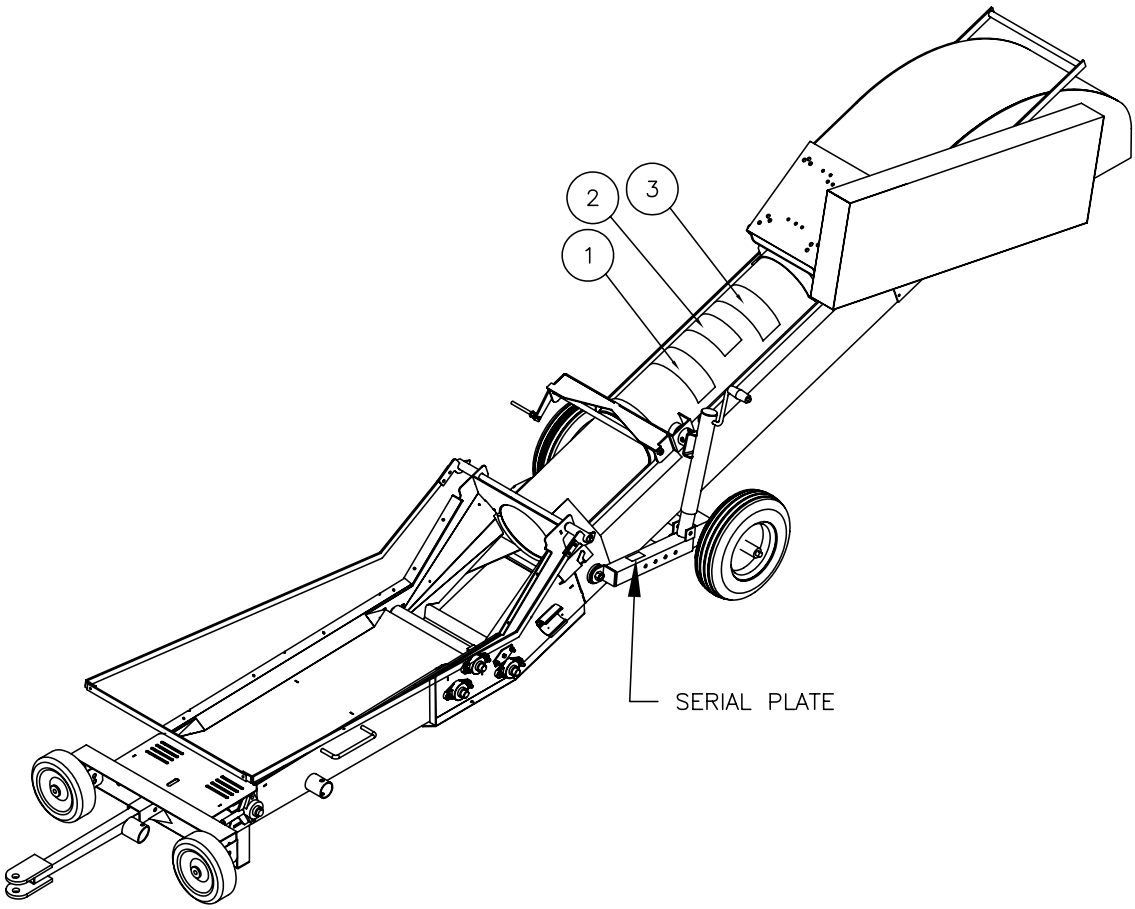

SAFETY SIGNS AND DECALS

Check components as specified below to insure that safety decals are present and in good condition. If a decal cannot be easily read for any reason or has been painted over, replace it immediately. Decals may be ordered through your dealer.

SERIAL NUMBER

To insure efficient and prompt service, please furnish us with the model and serial number of your conveyor in all correspondence or other contacts. The serial plate is located on the right hand side of the inlet housing.

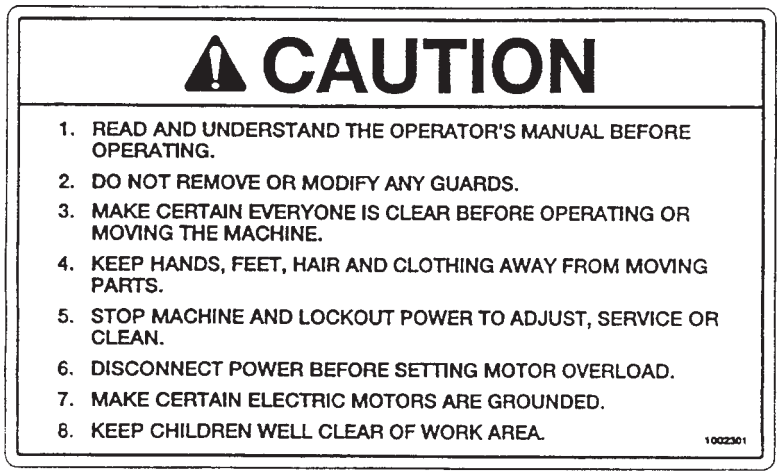

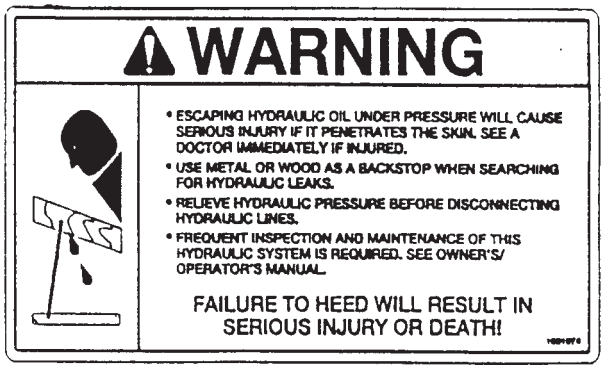

CONVEYOR PULLEYS, ROLLERS & BEARINGS

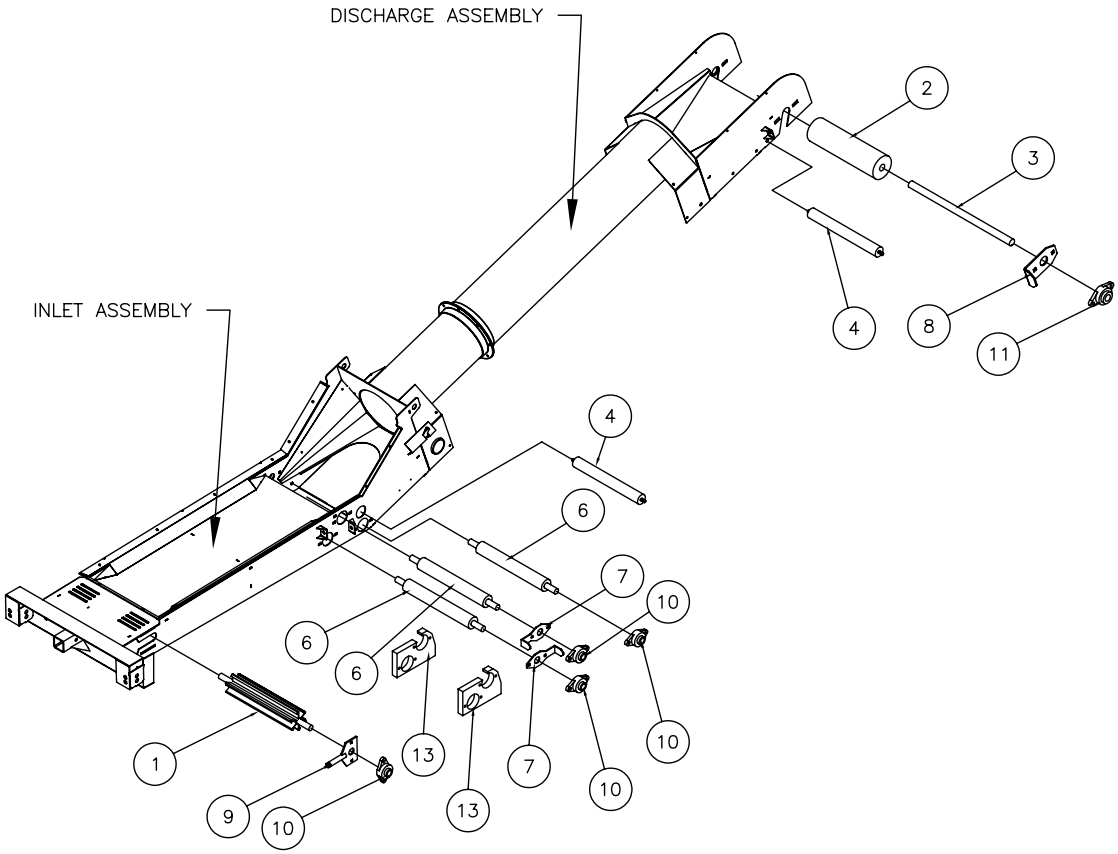

REF. NO	PART NO.	DESCRIPTION
1	1030234	Tail Pulley, 4" dia. x 16" CF Wing w/1" Shaft
2	1037085	Head Pulley, 4" dia. x 16" CF w/1-1/4" Bore, 1/4" herringbone groove lagging (See assembled P/N Below)
3	1032530	Head Shaft, 1-1/4" dia. x 24 5/8" long
4	1024273	Roller, 1.9" dia. w/Hex Shaft
6	1024392	Roller “S”, 2- 1/4" dia. w/1" Shaft
7	1024290	Bearing Push Plate f/1" Brg.
8	1023727	Bearing Push Plate f/1-1/4" Brg.
9	1024475	Take-up Bearing Bracket
10	1029746	Bearing, 1" 2-Hole Flanged
11	1029742	Bearing, 1-1/4" 2-Hole Flanged
12	1026107	Bolt 1/2" x 6" f/Take-up Bracket (not shown)
13	1029001	UHMW Seal Panel (2 places)
- -	1032529	Items 2 & 3 Asssembled

CONVEYOR UNDERCARRIAGE

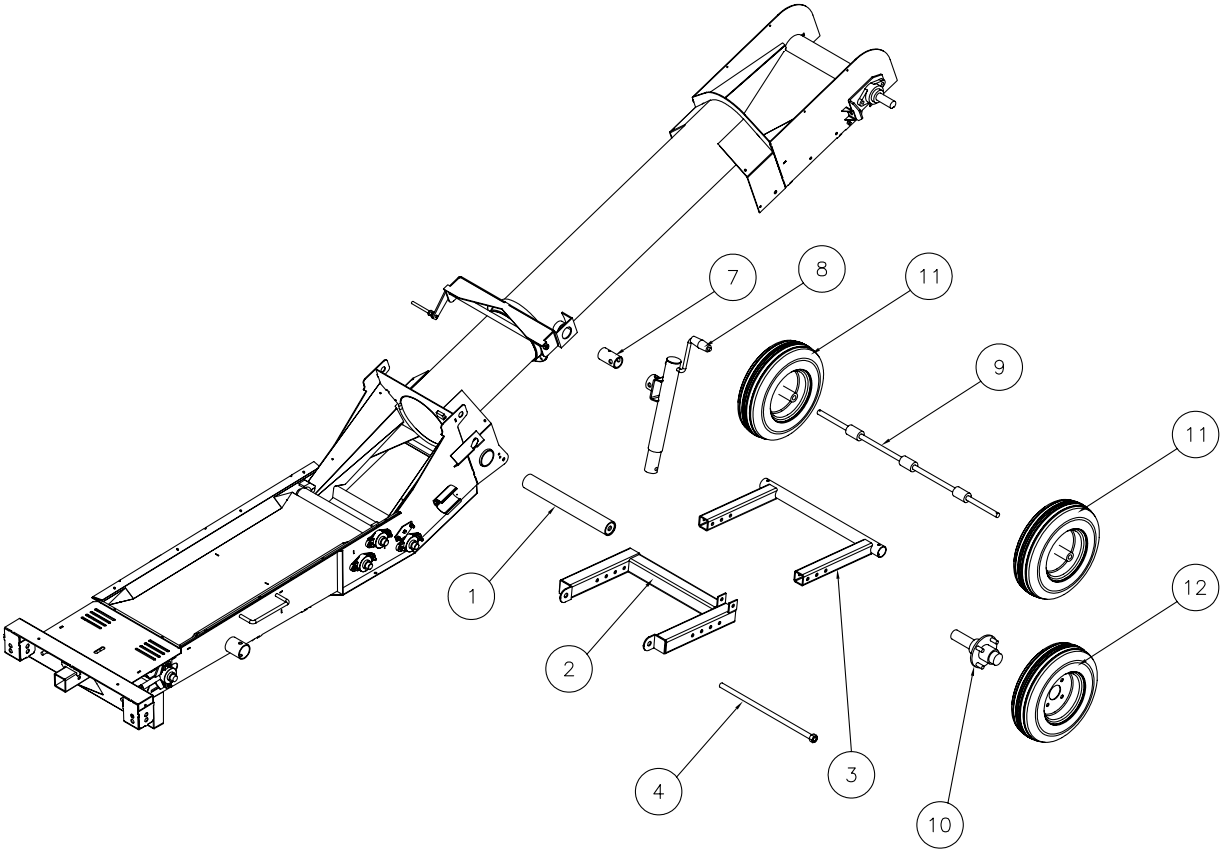

REF. NO	PART NO.	DESCRIPTION
1	1024288	Spacer Tube Weldment
2	1024443	Upper Undercarriage Weldment
3	1024444	Lower Undercarriage Weldment
4	1024289	Bolt, 3/4 - 10 x 20 1/8" long
7	1024462	Jack Tube Sleeve
8	1024514	Screw Jack
9	1024451	Axle Weldment (for basic undercarriage)
10	1024705	Hub Assembly (for towable undercarriage) (See Page P-12 for parts breakdown) (Required w/Incline extension)
11	800209	Wheel & Tire Assy., 16" dia. w/3/4" Brg. (f/basic undercarriage)
12	1024527	Wheel & Tire Assy. 480 x 400 x 8 (for towable undercarriage) (Required w/Incline extension)

CONVEYOR INLET HOPPER

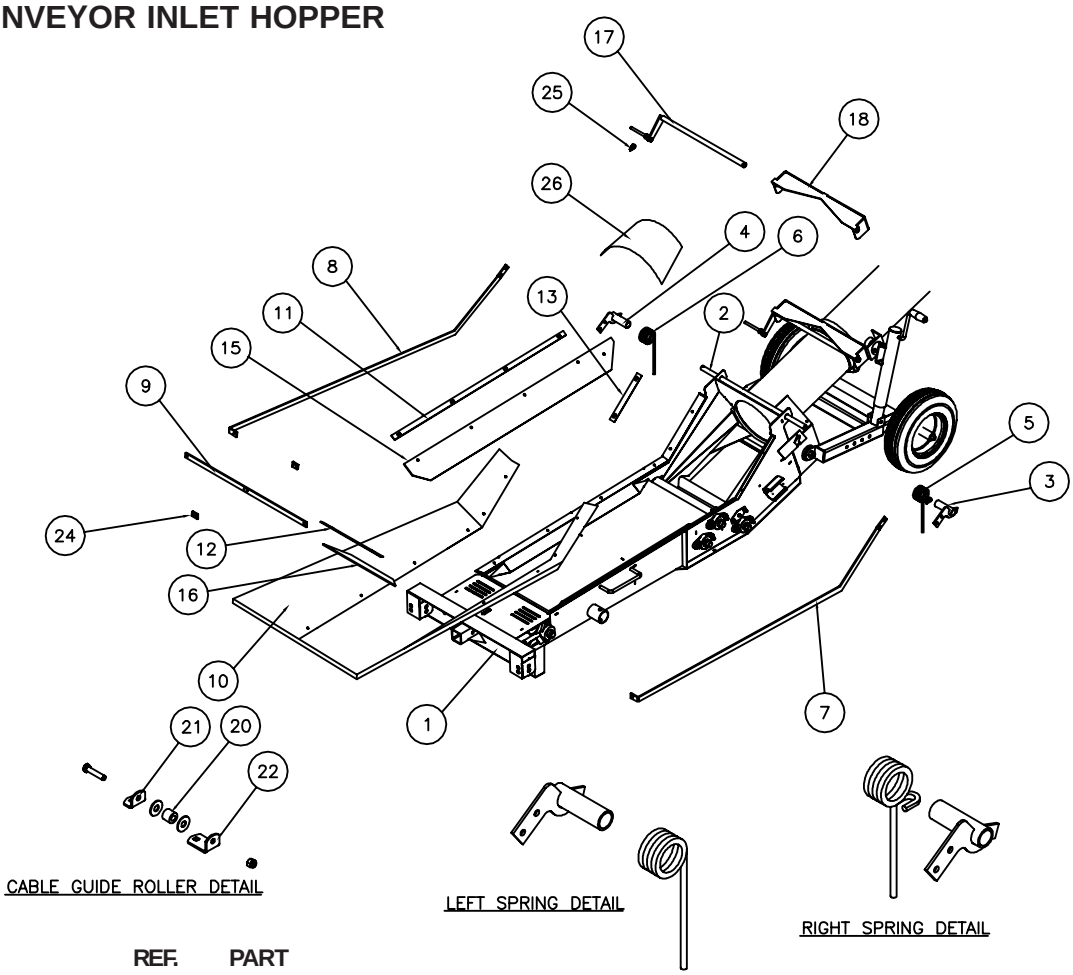

REF. NO	PART NO.	DESCRIPTION
1	1032277	Inlet Hopper Frame Weldment
2	1023835	Spring Pivot Pipe
3	1024361	Spring Anchor (right)
4	1024360	Spring Anchor (left)
5	1023398P	Hopper Spring (right)
6	1023399P	Hopper Spring (left)
7	1024363	Hopper Support Bar (right)
8	1024381	Hopper Support Bar (left)
9	1024366	Hopper End Bar
10	1024369	Canvas Hopper
11	1024367	Tarp Retaining Strap (side) (typical both sides)
12	1024368	Tarp Retaining Strap (end)
13	1024538	Tarp Retaining Strap (upper) (typical both sides)
14	1024546	Skirt Rubber (incline side) (typical both sides)
15	1024545	Skirt Rubber (side) (typical both sides)
16	1024544	Skirt Rubber (end)
17	1035402	Pull Handle Weldment
18	1035403	Handle Mount Weldment
19	4021A1	Cable, 3/16” x 12’ long (not shown)
20	1022398	UHMW Cable Guide Roller
21	1035383	Cable Roller Bracket (short)
22	1035382	Cable Roller Bracket (long)
23	5321C	3/16” Cable Clamp
24	1035454	Cable Clamp
25	420035	Cable Thimble
26	1041946	Rubber Inlet Skirt Cover

DISCHARGE AND SPOUT

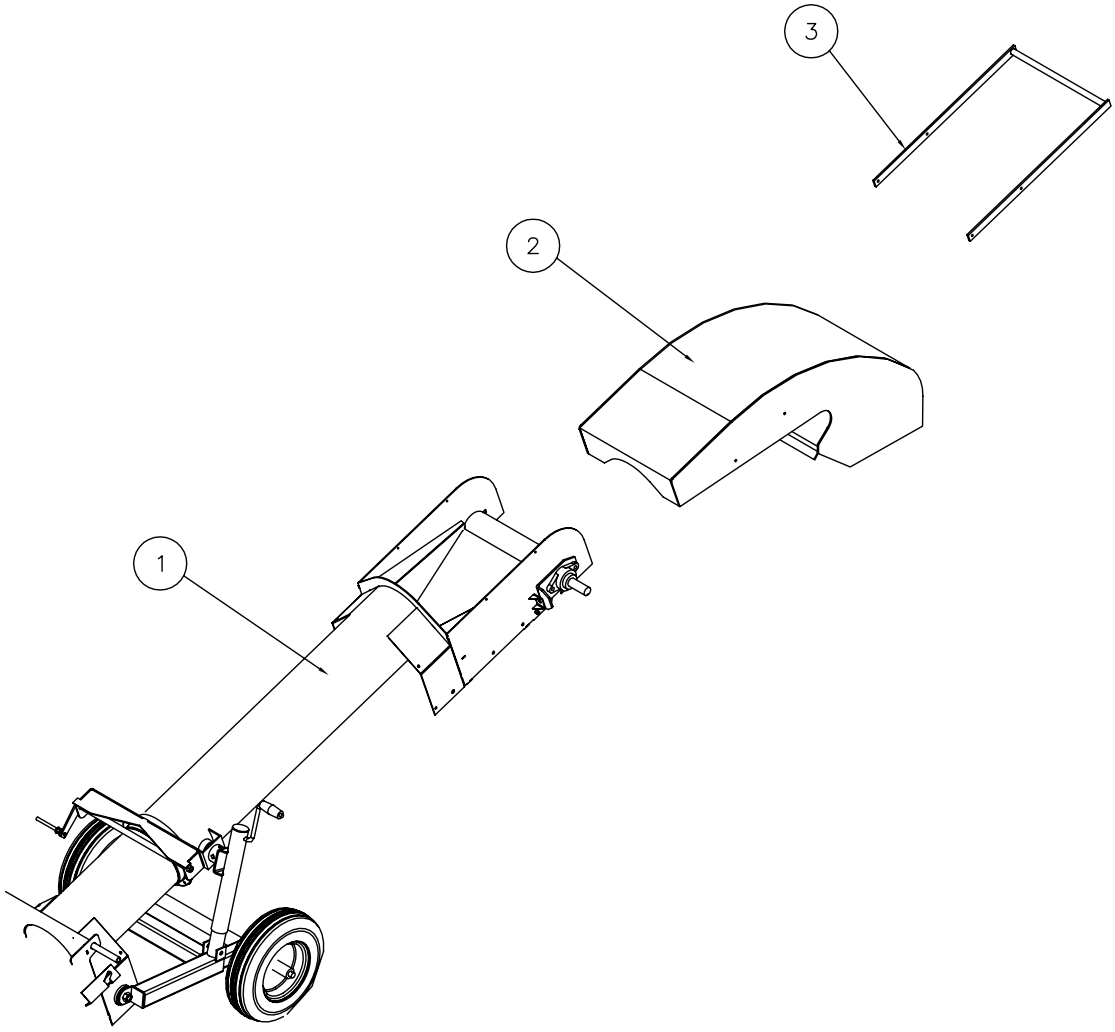

REF. NO	PART NO.	DESCRIPTION
1	1024316	Discharge Frame Weldment
2	1024495	Plastic Discharge Spout
3	1024498	Push Handle

ELECTRIC DRIVE

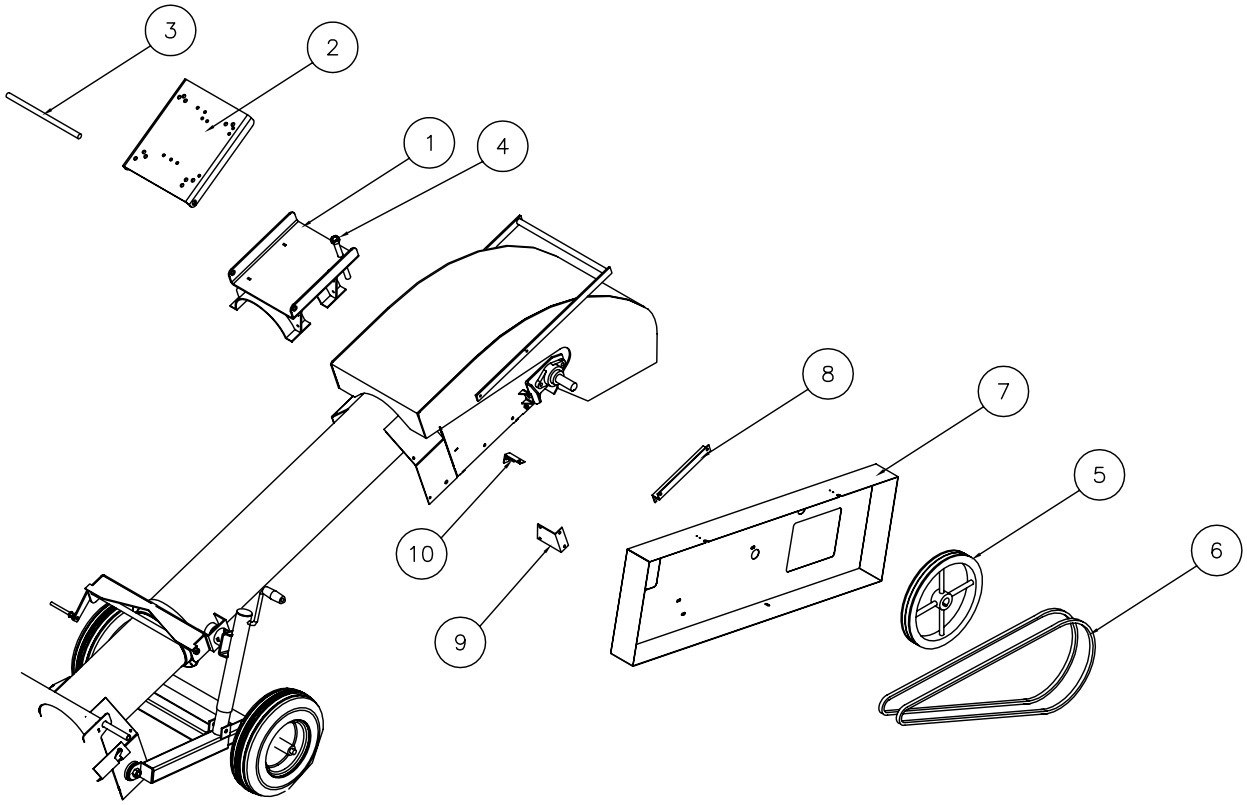

REF. NO	PART NO.	DESCRIPTION
1	1024423	Motor Mount Support Weldment
2	1018758	Motor Mount Plate
3	1018789	Pivot Shaft
4	1024558	Motor Mount Adjusting Bolt
5	40152	Sheave, 2B 12" w/1 1/4" Bore
6	40133	Belt B-100 (two required)
7	1024507	Belt Guard Weldment (shown w/o door)
8	1024512	Front Belt Guard Bracket
9	1024511	Rear Belt Guard Bracket
10	1024574	Bottom Belt Guard Bracket
- -	40191	Motor Sheave 2B 2.65" P.D. w/1-1/8" Bore (For 60 Hz, 1750 RPM motor) (5 HP Drive)
- -	40199	Motor Sheave 2B 3.2” P.D. w/1-1/8” Bore (For 50 Hz, 1450 RPM motor) (5 HP Drive)
- -	40197	Motor Sheave 2B 2.65” P.D. w/1-3/8” Bore (For 60 Hz, 1750 RPM motor) (7-1/2 HP Drive)
- -	40193	Motor Sheave 2B 3.2” P.D. w/1-3/8” Bore (For 50 Hz, 1450 RPM Motor) (7-1/2 HP Drive)

HYDRAULIC DRIVE & PIPING

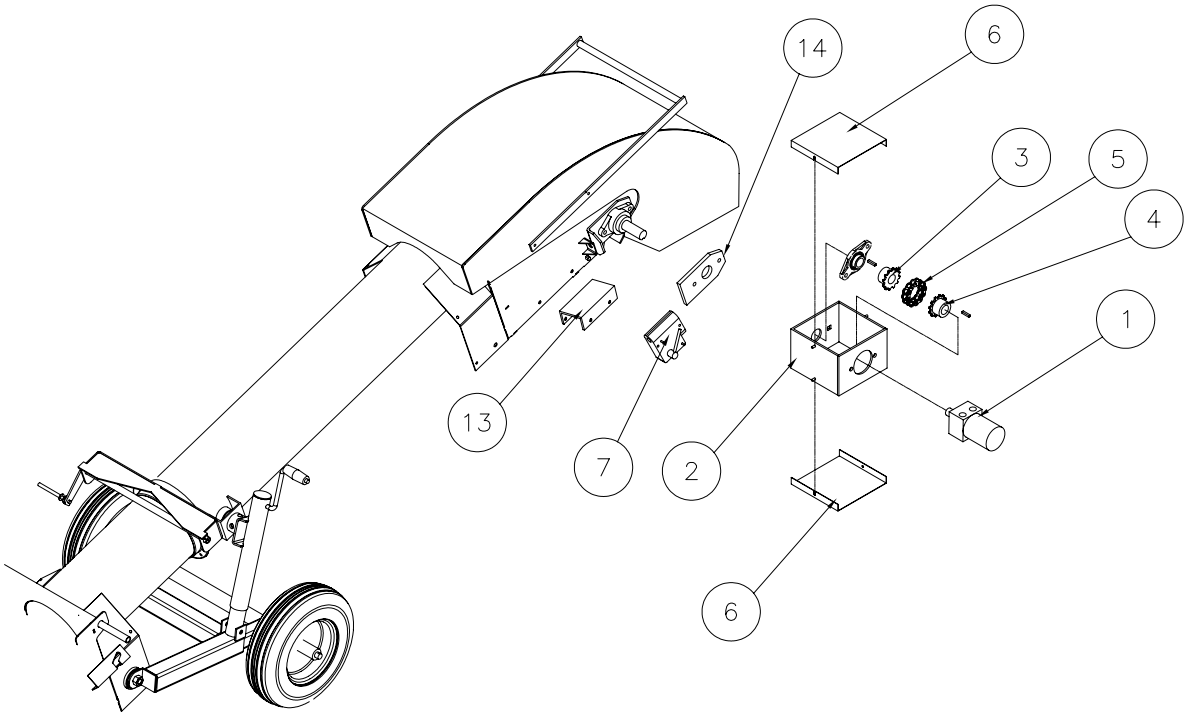

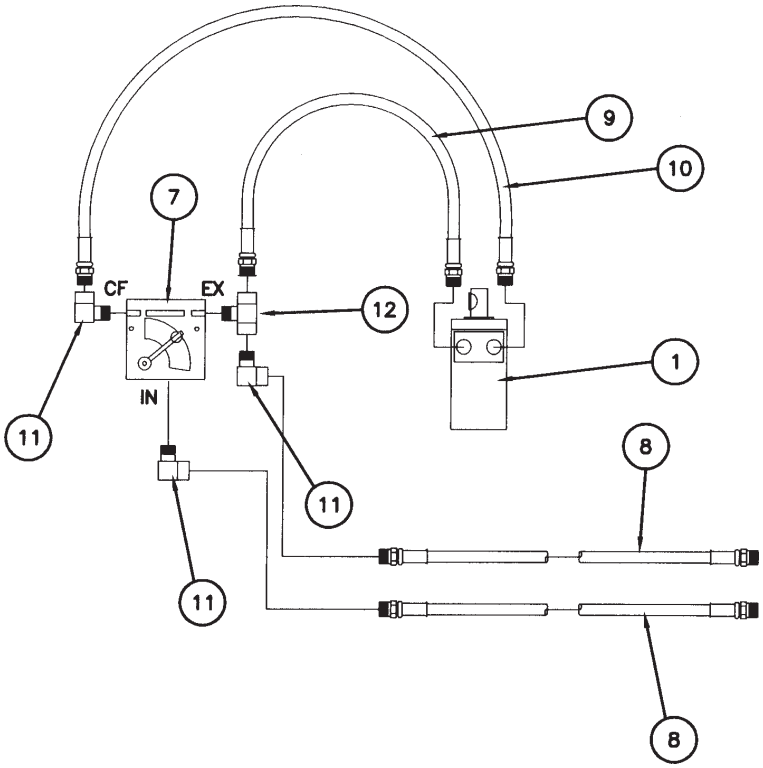

HYDRAULIC DRIVE - CONT.

REF. NO	PART NO.	DESCRIPTION
1	1004714	Hydraulic Motor “H” Series 5.9 cu. in
2	1029023	Hydraulic Motor Mount Weldment
3	3199A1	Coupler Half 60B12 w/1-1/4" Bore
4	3198A1	Coupler Half 60B12 w/1" Bore
5	3146A91	Flex Coupler Chain RC-60
6	1029028	Coupling Guard Panel
7	106404	Hydraulic Flow Control Valve
8	1024537	Hydraulic Hose 1/2" x 12’-0" long
9	1024535	Hydraulic Hose 1/2" x 24" long
10	1024536	Hydraulic Hose 1/2" x 34" long
11	106413	Hydraulic Elbow, 90°
12	1004732	Hydraulic Tee
13	1029029	Valve Mount Bracket
14	1029024	Bearing Spacer Plate

WIND GUARD

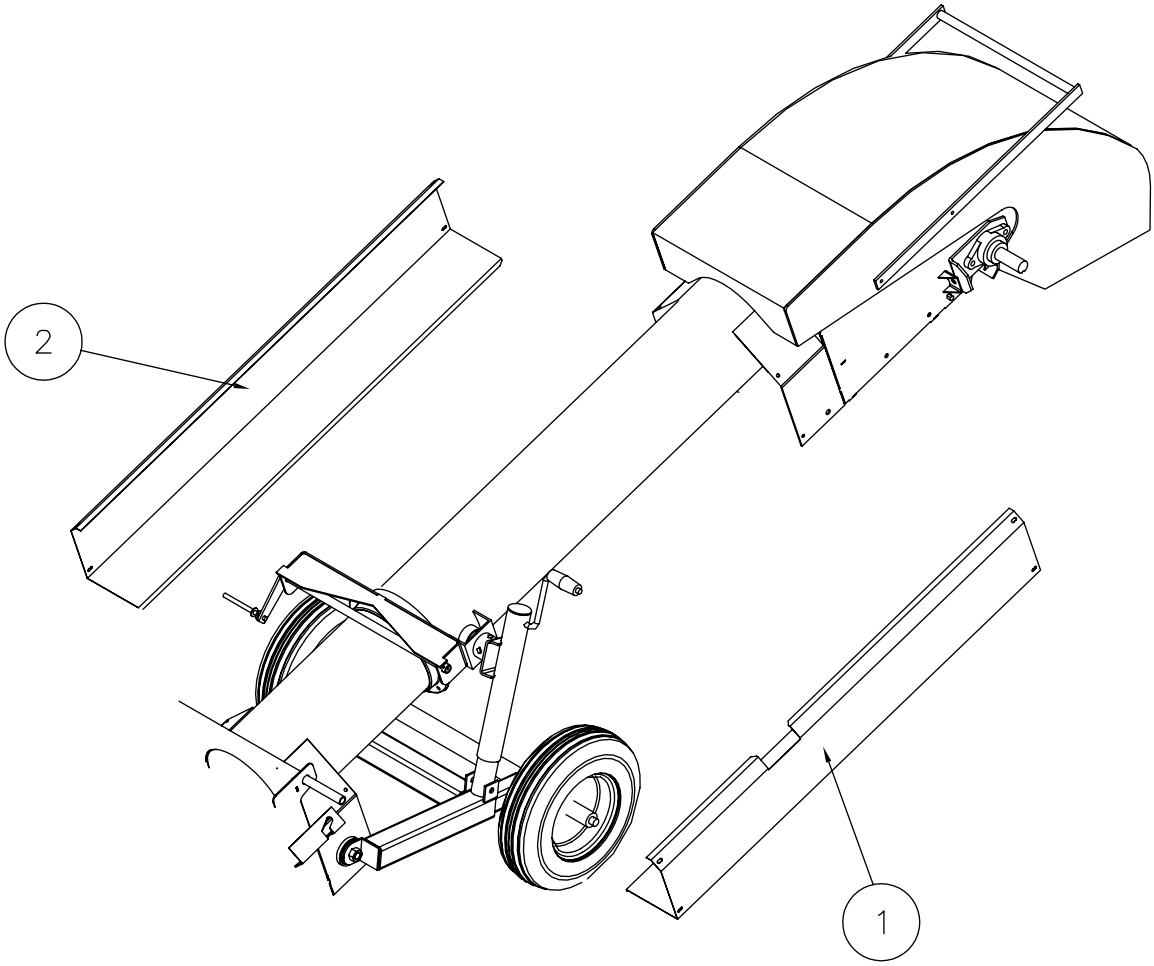

REF. NO	PART NO.	DESCRIPTION
1	1024532	Wind Guard Panel (right) with notch
2	1024427	Wind Guard Panel (left)

(NOTE: For conveyors with the optional 5' long incline extension refer to page P-14.

SWING-AWAY AND TOW HITCH

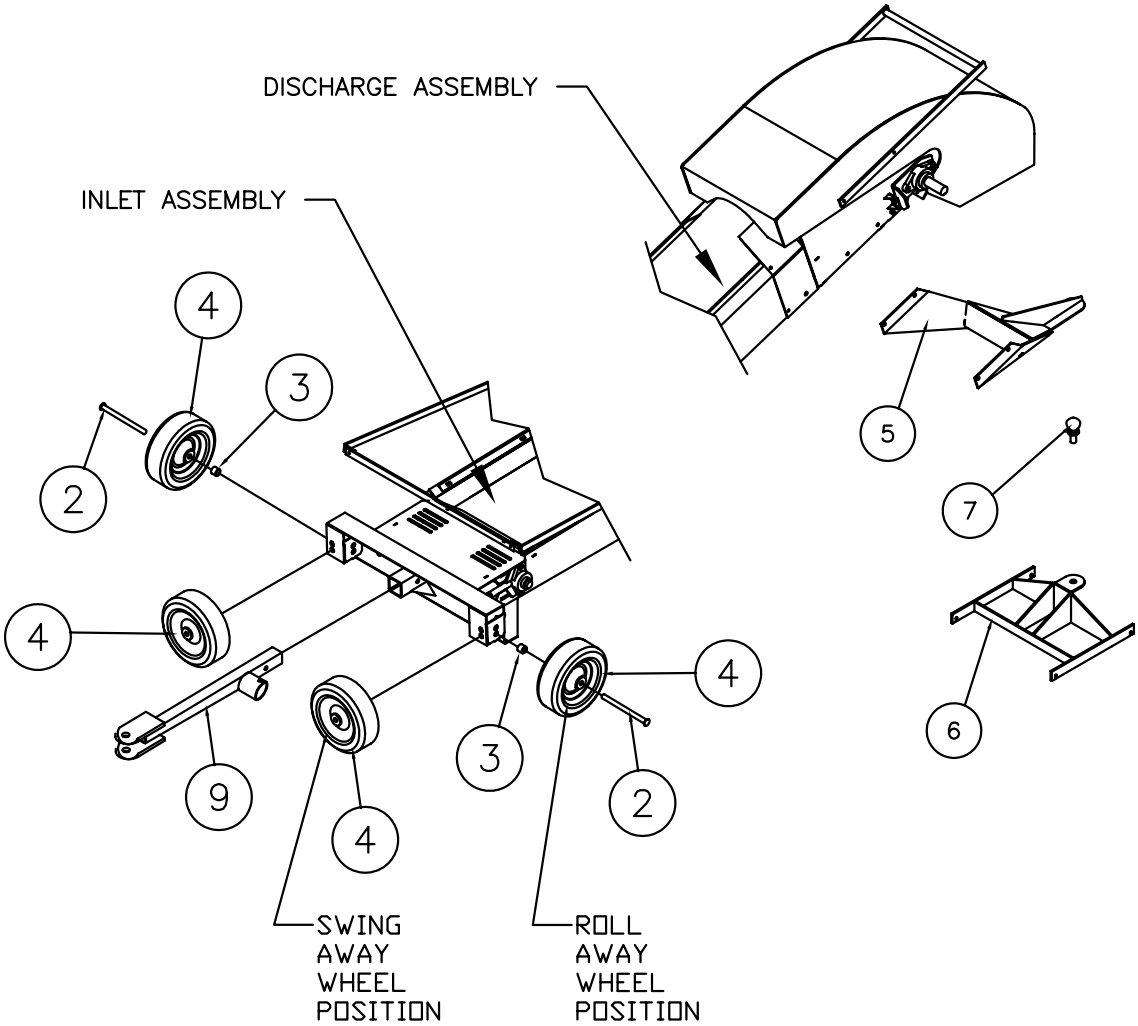

REF. NO	PART NO.	DESCRIPTION
2	1024345	Wheel Axle
3	1021030	Spacer Bushing f/Wheel
4	1022373	Wheel, 10" x 3 1/4" w/5/8" Bore
5	1024323	Pivot Bracket Weldment
6	1024329	Hopper Pivot Bracket (For single belt conveyor hopper)
6	1026460	Hopper Pivot Bracket (For squeeze belt conveyor hopper)
6	1032011	Hopper Pivot Bracket (For portable grain pump hopper)
6	1037376	Hopper Pivot Bracket (For LPCC or transfer belt hopper)
7	1024506	Hitch Ball
9	1032278	Hitch Tube Weldment

NOTE: For towable undercarriage parts, see page P-4.

HUB AND SPINDLE
(For Towable Undercarriage)

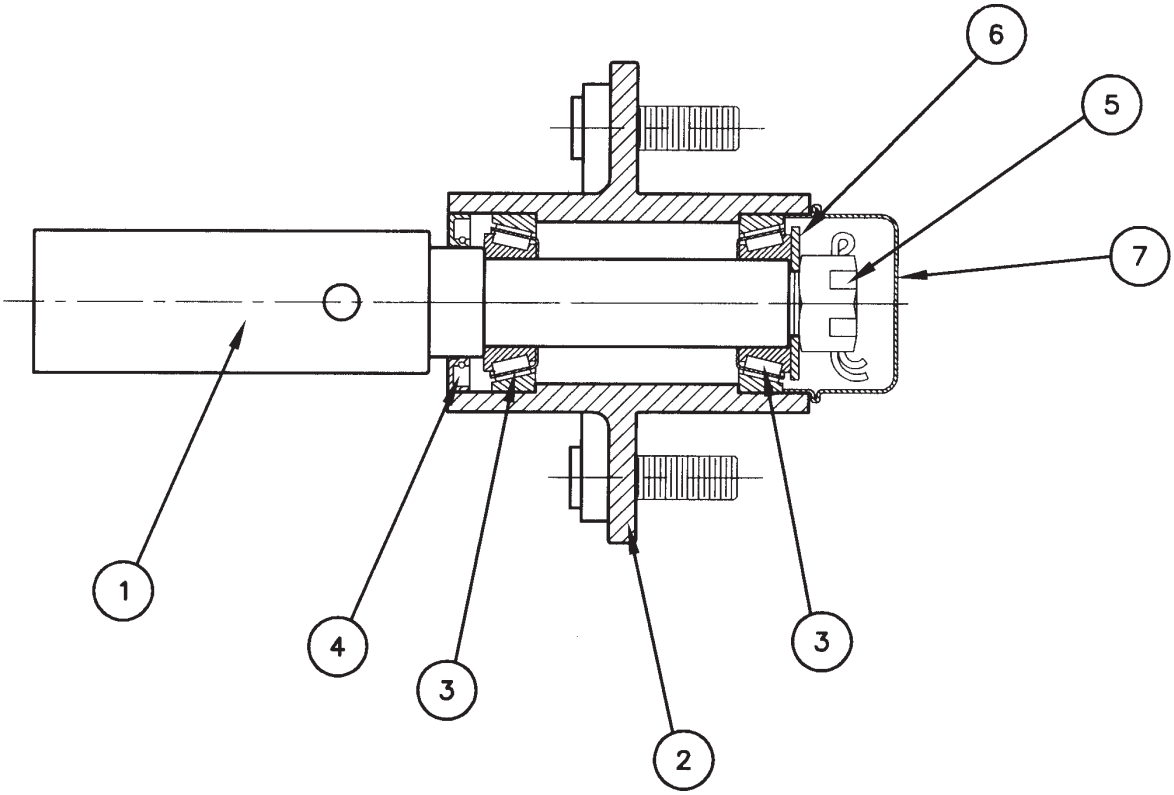

REF. NO	PART NO.	DESCRIPTION
- -	1024705	Spindle and Hub Assembly
1	1024525	Spindle
2	1024522	Hub with Bearing Cups
3	40377	Bearing Cone (two places)
4	1024523	Seal
5	6360C	Nut
6	1024526	Washer
7	1024524	Cover

BELTING COMPONENTS

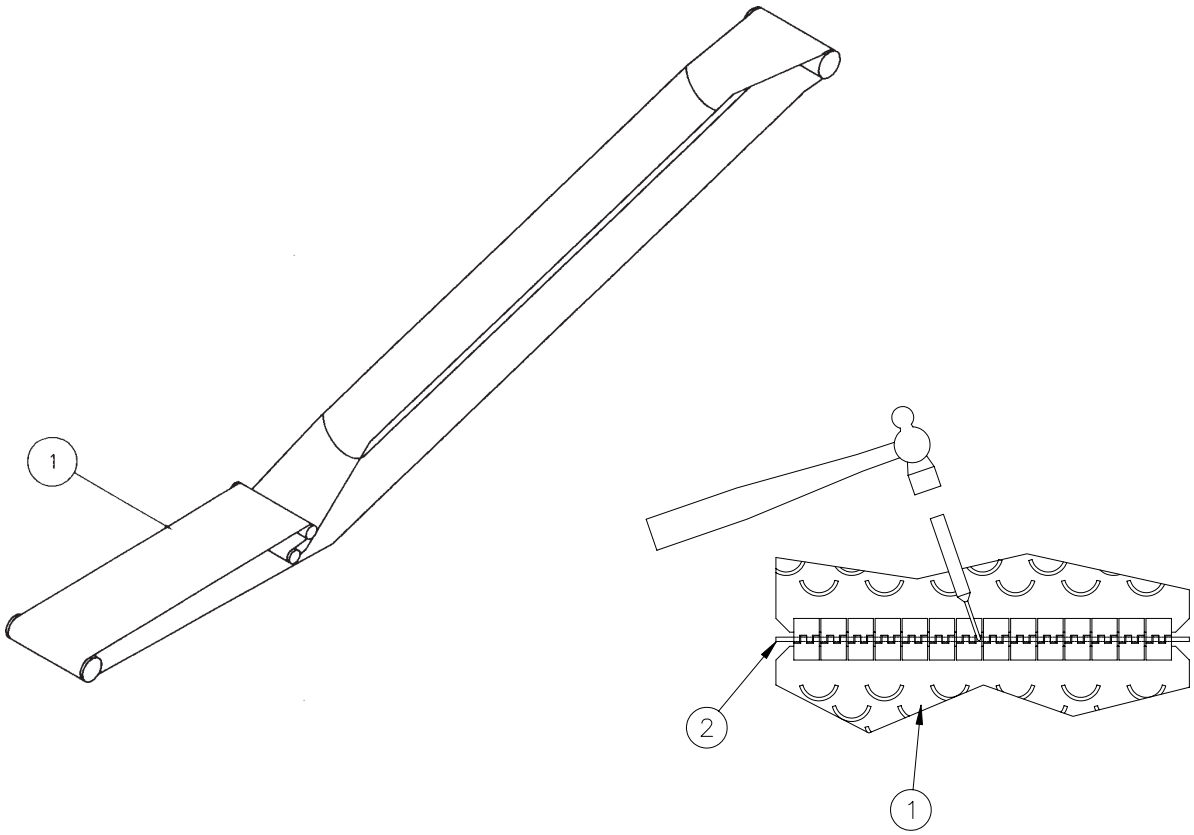

REF. NO	PART NO.	DESCRIPTION
1	1024457	Conveyor Belting, 15" wide x 29'-3" long Low Temp PVC, Black Crescent Top Cover w/Slider Bed Back, RS125 Alligator Lacing installed on both ends. (Includes nylon covered hinge pin and retaining washers)
- -	1027314	Same as above except 39'-3" long (for conveyor w/5' incline ext.)
1	1024458	Conveyor Belting, 15" wide x 29'-3" long 2 ply Rubber, Continuous Chevron Top w/Slider Bed Back, RS 125 Alligator Lacing installed on both ends. (Includes nylon covered hinge pin & retaining washers)
- -	1038320	Same as above except 39'-3" long (for conveyor w/5' incline ext.)
2	1024218	Hinge Pin Kit, nylon covered steel cable x 15" long
	1024215	Hinge Pin Material (per foot part no.)
4	1015S-KIT	Belt Splice Kit (with installation tool) (Enough for four belt splices)
	1015AS-SET	Belt Splice Kit (without installation tool) (Enough for four belt splices)

OPTIONAL 5’ INCLINE EXTENSION PARTS

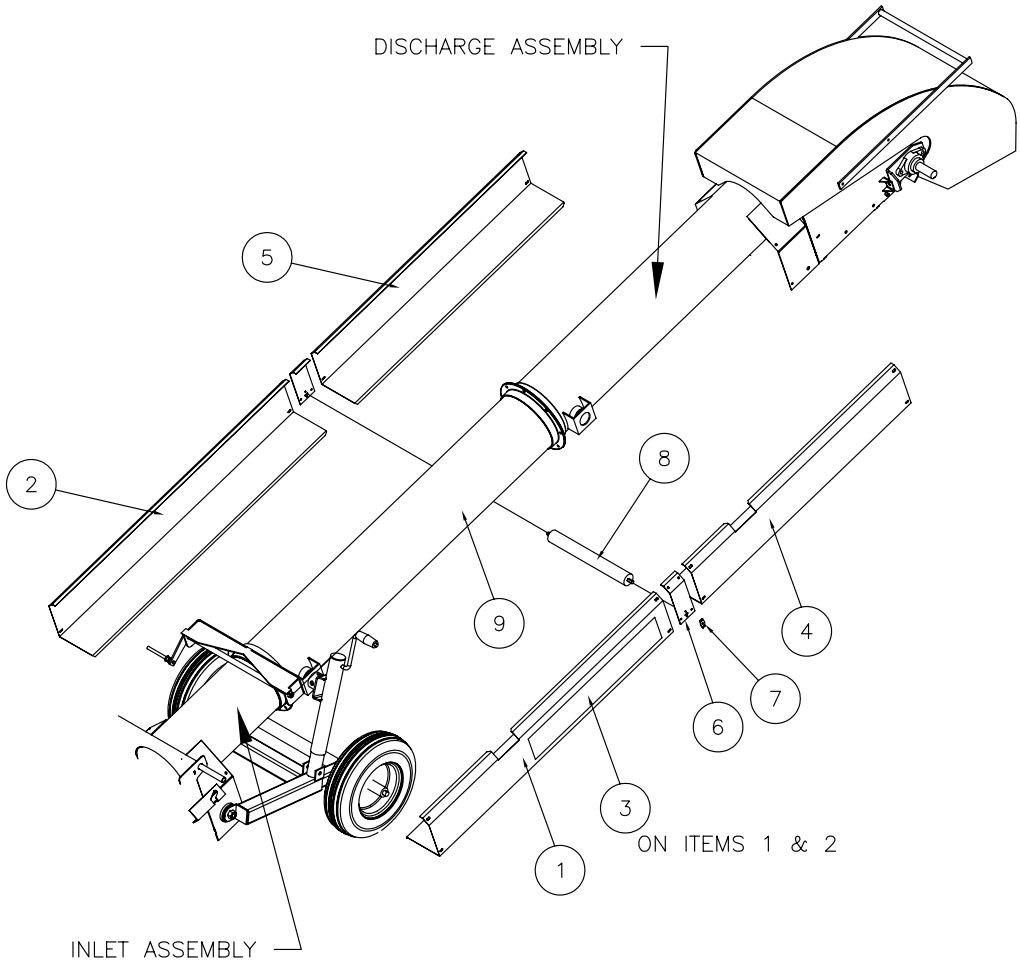

REF. NO	PART NO.	DESCRIPTION
1	1024532	Wind Guard Panel (lower right hand w/notch)
2	1024427	Wind Guard Panel (lower left hand)
3	1001125	Hutchinson LOGO Decal (one used on each Item 1 & 2)
3	1009864	Mayrath LOGO Decal (one used on each Item 1 & 2)
4	1038321	Wind Guard Panel (upper right hand w/notch)
5	1038319	Wind Guard Panel (upper left hand)
6	1038328	Splice Plate (two required)
7	1025602	Adjusting Plate f/return roller
8	1024273	Return Roller
9	1038323	Tube Weldment (5’ extension)

Hutchinson/Mayrath

A Division of **GLOBAL** *Industries, Inc.*

P.O. Box 629 514 W. Crawford Clay Center, KS 67432
Phone 785-632-2161 1-800-523-6993 FAX 785-632-5964